# PARTS MANUAL

MQ POWER®

# MODEL
# DA7000SSA2
# DA7000SSA2GH
# PORTABLE GENERATORS
## (KUBOTA Z482-E4B-DGDE-2 DIESEL ENGINE)

Revision #1 (02/10/17)

**THIS MANUAL MUST ACCOMPANY THE EQUIPMENT AT ALL TIMES.**

# DA7000SSA2/SSA2GH Generator

Parts Ordering Procedures ..... 3
Explanation Of Code In Remarks Column ..... 4
Suggested Spare Parts ..... 5

## Components

Nameplate And Decals Assembly ..... 6-7
Generator Assembly ..... 8-9
Control Panel Assembly ..... 10
Control Panel Assembly ..... 11
Electric Parts Assembly ..... 12-13
Engine And Radiator Assembly ..... 14-15
Oil Filter Retrofit Assembly (DA7000SSA2GH) 16-17
Battery Assembly ..... 18-19
Muffler Assembly ..... 20-21
Fuel Tank Assembly ..... 22-23
Enclosure Assembly ..... 24-27
Rubber Seals Assembly ..... 28-29

## KUBOTA Z482-E4B Engine

Crankcase Assembly ..... 30-31
Oil Pump Assembly ..... 32-33
Oil Pan Assembly ..... 34-35
Cylinder Head Assembly ..... 36-37
Gear Case Assembly ..... 38-39
Head Cover Assembly ..... 40-41
Dipstick And Guide Assembly ..... 42-43
Main Bearing Case Assembly ..... 44-45
Camshaft And Idle Gear Assembly ..... 46-47
Piston And Crankshaft Assembly ..... 48-49
Flywheel Assembly ..... 50-51
Fuel Camshaft And Gov. Shaft Assembly ..... 52-53
Idle Apparatus Assembly ..... 54-55
Stop Solenoid Assembly ..... 56-57
Injection Pump Assembly ..... 58-59
Speed Control Plate Assembly ..... 60-61
Nozzle Holder And Glow Plug Assembly ..... 62-63
Nozzle Holder Comp. Assembly ..... 64-67
Fork Lever Gov. Assembly ..... 68-71
Dynamo And Pulley Assembly ..... 72-73
Dynamo Components Assembly ..... 74-75
Starter Assembly ..... 76-77
Starter Components Assembly ..... 78-79
Oil Switch Plug Assembly ..... 80-81
Water Flange And Thermostat Assembly ..... 82-83
Water Pump Assembly ..... 84-85
Water Pipe Assembly ..... 86-87
Fan Assembly ..... 88-89
Valve And Rocker Arm Assembly ..... 90-91
Inlet Manifold Assembly ..... 92-93
Exhaust Manifold Assembly ..... 94-95
Glow Lamp And Timer Assembly ..... 96-97
Accessories And Serv. Assembly ..... 98-99
Label And Ops Manual Assembly ..... 100-101

Terms And Conditions Of Sale — Parts ..... 102

**NOTICE**

Specifications and part numbers are subject to change without notice.

## DA7000SSA2/SSA2GH GENERATOR

### 1 to 3 units

| Qty. | P/N | Description |
|---|---|---|
| 5 | 0810105900 | FUEL STRAINER (TANK) |
| 1 | A9924800024 | FUEL CAP ASSY |
| 1 | 1628663602 | STARTER SWITCH |
| 5 | 3741055150 | IGNITION KEY |
| 1 | A6311500004 | RADIATOR HOSE (UPPER) |
| 1 | A6311500103 | RADIATOR HOSE (LOWER) |
| 1 | 0601842463 | RESISTOR |
| 1 | 1584464603 | REGULATOR |
| 1 | 0601806423 | CIRCUIT BREAKER, 1P 20A |
| 1 | 0601806424 | CIRCUIT BREAKER, 1P 30A |
| 3 | 0601810830 | BULB, INDICATOR |
| 4 | 0601806642 | FUSE, 5 AMP |
| 2 | 0601806643 | FUSE, 15 AMP |
| 2 | 0601806644 | FUSE, 30 AMP |
| 1 | 0601806640 | FUSE, 65 AMP |

**NOTICE**

Part numbers on this Suggested Spare Parts list may supersede/replace the part numbers shown in the following parts lists.

## KUBOTA Z482-E4B-DGDE-2 DIESEL ENGINE

### 1 to 3 units

| Qty. | P/N | Description |
|---|---|---|
| 5 | 7000011221 | ELEMENT, AIR FILTER |
| 5 | 1T02143560 | ELEMENT, FUEL FILTER |
| 5 | HH15032430 | OIL FILTER CARTRIDGE |
| 2 | 1980572530 | FAN BELT |
| 1 | 1522139013 | SWITCH, OIL |
| 4 | 1G67965512 | GLOW PLUG |
| 2 | 1753883040 | SWITCH, THERMOSTAT |

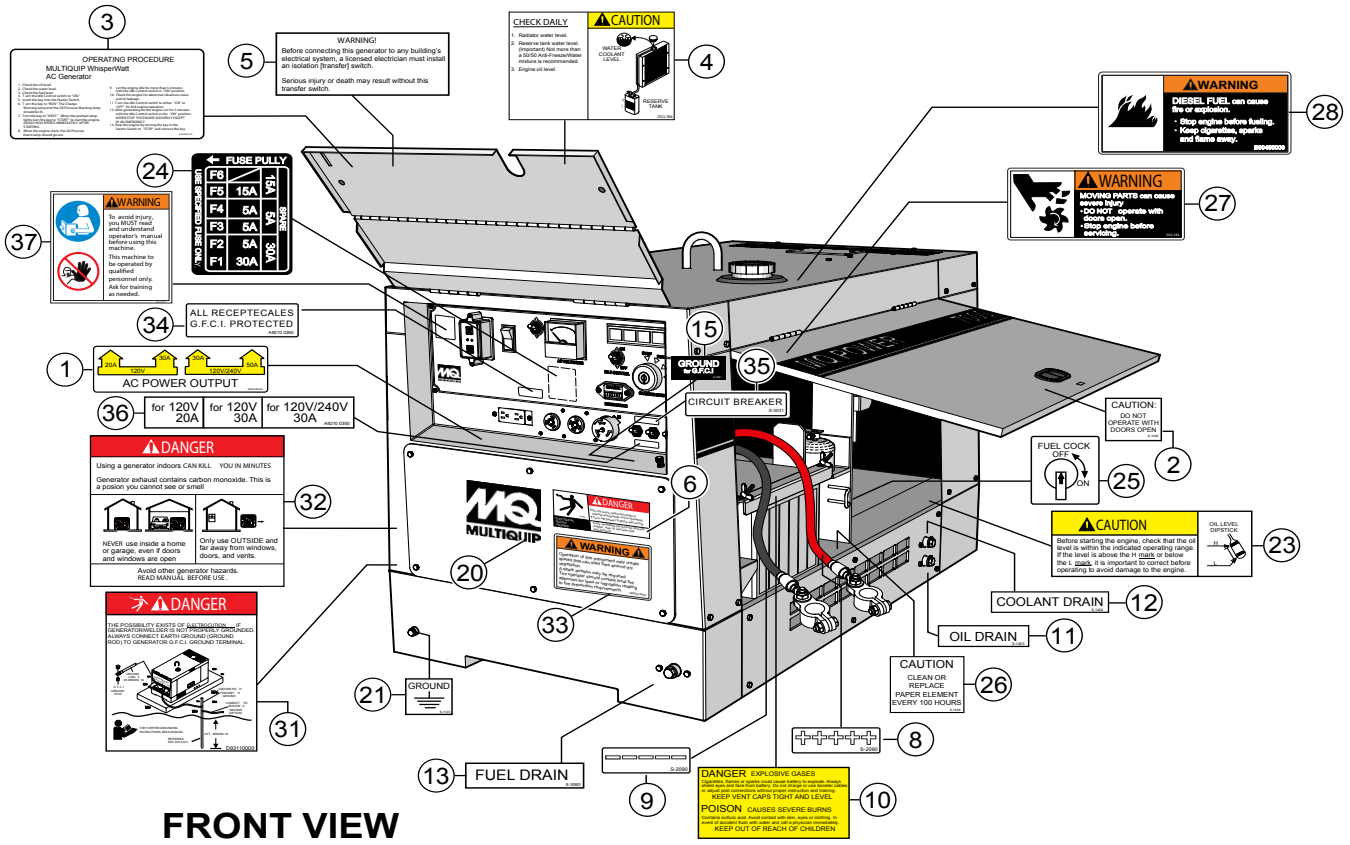


FRONT VIEW

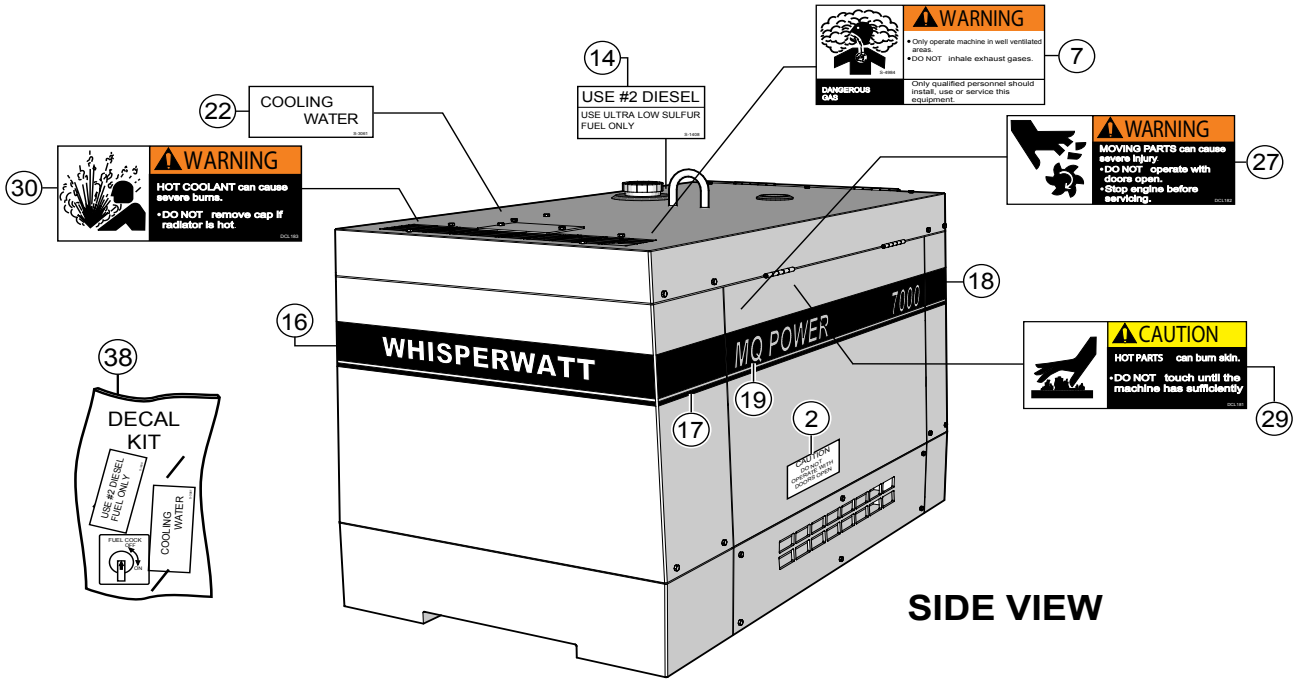


SIDE VIEW

| NO. | PART NO. | PART NAME | QTY. | REMARKS |
|---|---|---|---|---|
| 1$ | A5551000803 | DECAL: AC POWER OUTPUT | 1 | A55100080 |
| 2$ | 1630610504 | DECAL: CAUTION | 2 | S1409 |
| 3$ | A5552000113 | DECAL: OPERATING PROCEDURE | 1 | A55200011 |
| 4$ | 6390671104 | DECAL: IMPORTANT "CHECK DAILY" | 1 | S2377 |
| 5$ | 0820610404 | DECAL: WARNING | 1 | S3627 |
| 6$ | 8700611904 | DECAL: DANGER ELECT. SHOCK HAZ. | 1 | S4985 |
| 7$ | 8700611804 | DECAL: WARNING DANGEROUS GAS | 1 | S4984 |
| 8$ | 0800689404 | DECAL: + | 1 | S2090 |
| 9$ | 0800689504 | DECAL: - | 1 | S2091 |
| 10$ | 0820650604 | DECAL: DANGER EXPLOSIVE GASES | 1 | |
| 11$ | 1630645004 | DECAL: OIL DRAIN | 1 | S1403 |
| 12$ | 1630647004 | DECAL: COOLANT DRAIN | 1 | S1404 |
| 13$ | 7810680104 | DECAL: FUEL DRAIN | 1 | S3060 |
| 14$ | B9504501214 | DECAL: DIESEL FUEL | 1 | B90450121 |
| 15$ | 7670624004 | DECAL: GROUND FOR G. F. C. I. | 1 | S3821 |
| 16$ | A5561100103 | DECAL: STRIPE WHISPERWATT | 1 | |
| 17$ | A5561100204 | DECAL: STRIPE | 2 | |
| 18$ | A5561100304 | DECAL: STRIPE | 2 | |
| 19$ | A5561100403 | DECAL: STRIPE MQ POWER 7000 | 2 | |
| 20$ | A5562000004 | DECAL: MQ | 1 | A56200000A |
| 21$ | 0800628504 | DECAL: GROUND | 1 | S1123 |
| 22$ | 7810680204 | DECAL: COOLING WATER | 1 | S3061 |
| 23$ | B9505000304 | DECAL: CAUTION OIL LEVEL GAUGE | 1 | B90500030 |
| 24$ | 8700625504 | DECAL: FUSE BOX | 1 | S4936 |
| 25$ | 1630680104 | DECAL: FUEL COCK | 1 | S1407 |
| 26$ | 1630610404 | DECAL: CAUTION | 1 | S1406 |
| 27$ | B9504000404 | DECAL: WARNING MOVING PARTS | 2 | B90400040 |
| 28$ | B9504500004 | DECAL: WARNING DIESEL FUEL | 1 | B90450000 |
| 29$ | B9504000304 | DECAL: CAUTION HOT PARTS | 1 | B90400030 |
| 30$ | B9504100104 | DECAL: WARNING HOT COOLANT | 1 | B90410010 |
| 31$ | D9531100004 | DECAL: DANGER ELECTROCUTION | 1 | D93110000 |
| 32$ | A9504000014 | DECAL: DANGER | 1 | A90400001 |
| 33$ | 920214100 | DECAL: WARNING START FIRES | 1 | REPLACES P/N M9504200004 |
| 34$ | A9521002604 | DECAL: G. F. C. I. PROTECTED | 1 | A92100260 |
| 35$ | 0840624504 | DECAL: CIRCUIT BREAKER | 1 | S3031 |
| 36$ | A9521003504 | DECAL: CIRCUIT BREAKER | 2 | A92100350 |
| 37$ | 35137 | DECAL: READ MANUAL | 1 | REPLACES P/N A9511100004 |
| 38 | SDA7000SSA2 | KIT, DECAL | 1 | INCLUDES ITEMS W/$ |

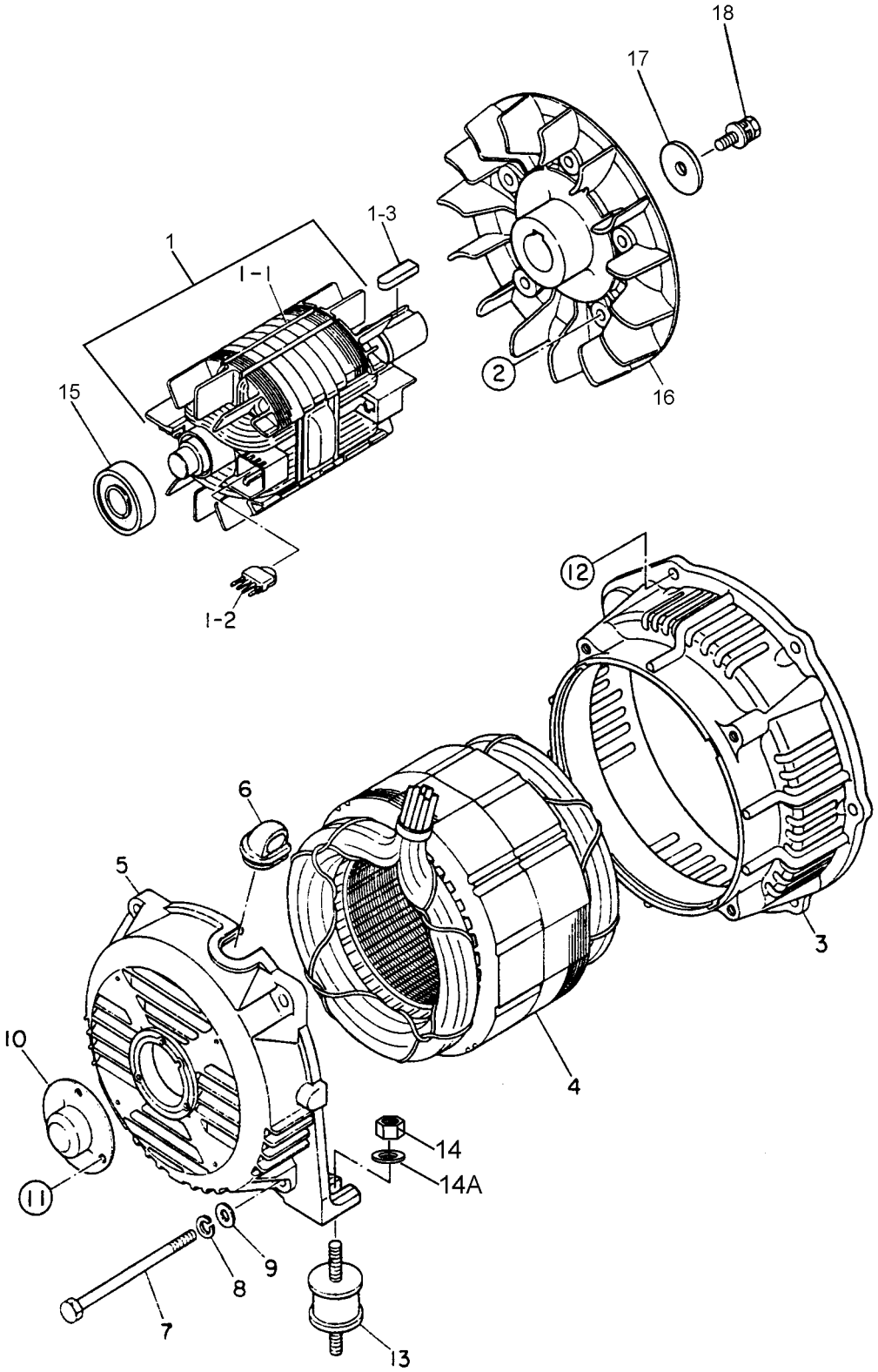
18
17
1-3
1
1-1
2
16
15
1-2
12
6
5
3
10
4
14
14A
11
9
8
7
13

| NO. | PART NO. | PART NAME | QTY. | REMARKS |
|---|---|---|---|---|
| 1 | A5110200003 | ROTOR ASSY. | 1 | INCLUDES ITEMS W/# |
| 1-1# | A5116000103 | FIELD ASSY. | 1 | |
| 1-2# | 7871025004 | RECTIFIER ASSY. | 2 | |
| 1-3# | 0171707033 | KEY | 1 | |
| 2 | 011208025 | HEX HEAD BOLT | 5 | REPLACES P/N 0012308025 |
| 3 | A515510002 | END BRACKET | 1 | |
| 4 | A5136000103 | ARMATURE ASSY. | 1 | |
| 5 | A6155000002C | END BRACKET | 1 | REPLACES P/N A6155000002 |
| 6 | 7871329514 | GROMMET | 1 | |
| 7 | 7901316004 | SET BOLT | 4 | |
| 8 | 0040008000 | WASHER, LOCK | 4 | |
| 9 | 0401450080 | WASHER, FLAT | 4 | REPLACES P/N 0041208000 |
| 10 | A6155400104C | COVER | 1 | REPLACES P/N A6155400104 |
| 11 | BF0261 | MACHINE SCREW | 3 | REPLACES P/N 0027105012 |
| 12 | 0012308020 | HEX HEAD BOLT | 6 | |
| 13 | 0805084704 | RUBBER SUSPENSION | 2 | |
| 14 | Y0207008000 | HEX NUT | 2 | |
| 14A | 0801086004 | WASHER, FLAT | 2 | |
| 15 | 042006304 | BEARING | 1 | REPLACES P/N 0071206304 |
| 16 | A5113100002 | FAN | 1 | |
| 17 | 1991072004 | SET WASHER, FAN | 1 | |
| 18 | 0012308020 | HEX HEAD BOLT | 1 | |

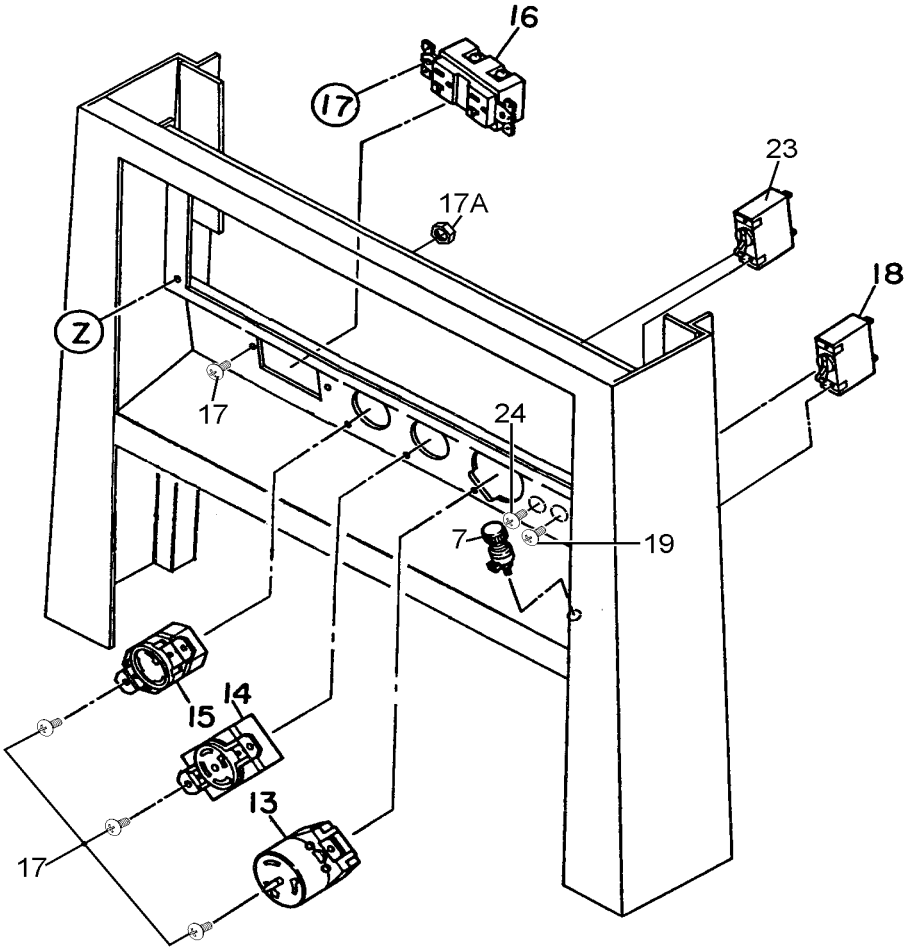
16
17
23
17A
18
Z
17
24
7
19
15
14
13
17

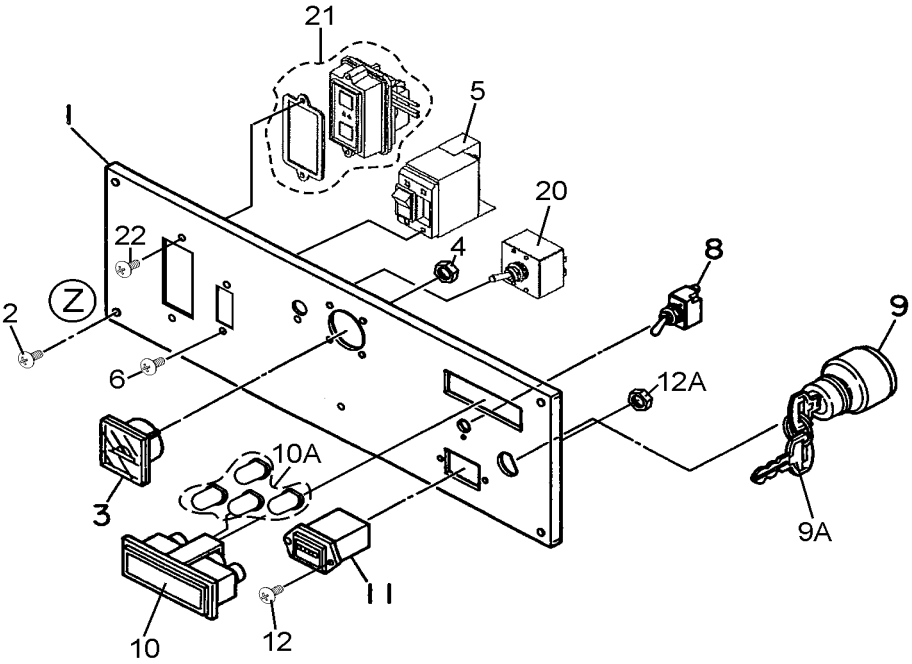
21
5
1
20
22
4
8
Z
2
9
6
12A
10A
3
9A
11
10
12

| NO. | PART NO. | PART NAME | QTY. | REMARKS |
|---|---|---|---|---|
| 1 | A5511306102 | CONTROL PANEL | 1 | |
| 2 | 0021805020 | MACHINE SCREW | 4 | |
| 3 | 0601806819 | AC VOLTMETER, 0-120/240V | 1 | |
| 4 | 0207003000 | HEX NUT | 2 | |
| 5 | Y0601872303 | CIRCUIT BREAKER, 120V @25A 2P | 1 | |
| 6 | 0021004016 | MACHINE SCREW | 2 | |
| 7 | 0601815109 | GROUND TERMINAL | 1 | |
| 8 | 0601830771 | IDLE CONTROL SWITCH | 1 | |
| 9 | 1628663602 | STARTER SWITCH | 1 | REPLACES P/N 0602100077 |
| 9A | 3741055150 | IGNITION, KEY | 1 | |
| 10 | 0601810523 | INDICATOR ASSY. | 1 | |
| 10A | 0601810830 | BULB | 4 | |
| 11 | 0601800682 | HOUR METER | 1 | |
| 12 | 0027403512 | MACHINE SCREW | 2 | |
| 12A | 0030003500 | HEX NUT | 2 | |
| 13 | Y0601814014 | RECEPTACLE, CS6369 | 1 | |
| 14 | 0601812529 | RECEPTACLE, L14-30R 125V 30A | 1 | |
| 15 | 0601811031 | RECEPTACLE, L5-30R 125V 30A | 1 | REPLACES P/N 0601811035 |
| 16 | 0601814065 | RECEPTACLE, 5-20R | 1 | |
| 17 | 0021004010 | MACHINE SCREW | 8 | |
| 17A | OEMAA8 | HEX NUT | 8 | REPLACES P/N 0030004000 |
| 18 | 0601806424 | CIRCUIT BREAKER, 1P 30A | 1 | |
| 19 | 0027103006 | MACHINE SCREW | 2 | |
| 20 | Y0601830776 | FULL POWER SWITCH | 1 | |
| 21 | 0601829301 | EARTH LEAKAGE RELAY, 120A@120V | 1 | |
| 22 | 0021004020 | MACHINE SCREW | 2 | |
| 23 | 0601806423 | CIRCUIT BREAKER,1P 20A | 1 | |
| 24 | 0027103006 | MACHINE SCREW | 2 | |

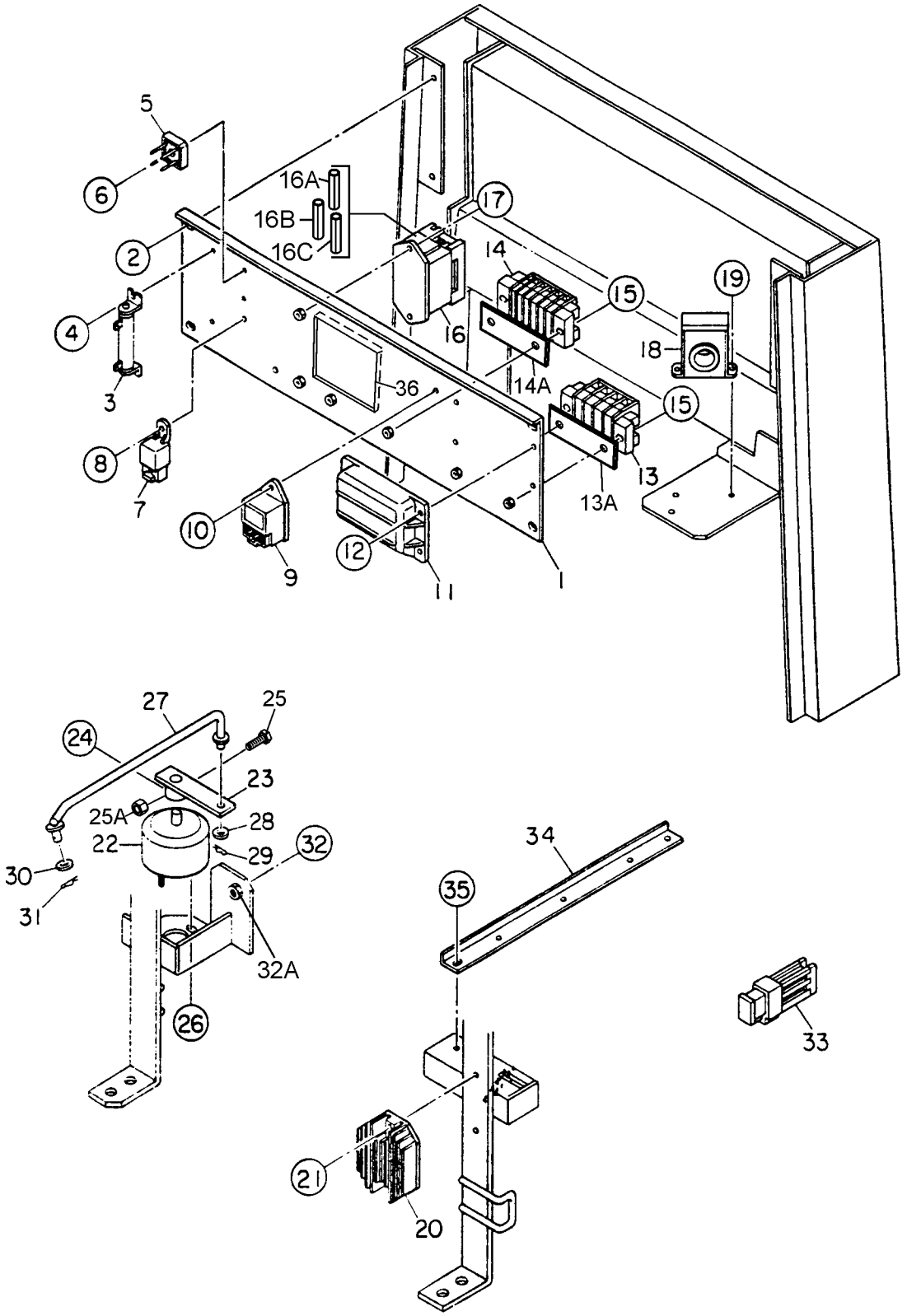
5
6
2
4
3
8
7
10
9
12
11
1
16A
16B
16C
17
16
14
14A
15
15
19
18
36
13
13A
27
25
24
23
25A
28
22
29
32
30
31
32A
26
34
35
33
21
20

| NO. | PART NO. | PART NAME | QTY. | REMARKS |
|---|---|---|---|---|
| 1 | A5261501403 | BRACKET, ELECTRIC PARTS | 1 | |
| 2 | 0016906016 | HEX HEAD BOLT | 4 | |
| 3 | 0601842463 | RESISTOR, 30W 10 OHM | 1 | |
| 4 | 0027104012 | MACHINE SCREW | 2 | |
| 5 | 0601823204 | RECTIFIER, S5VB60 | 2 | |
| 6 | 0027103020 | MACHINE SCREW | 2 | |
| 7 | 0601823754 | RELAY | 1 | |
| 8 | 0027105016 | MACHINE SCREW | 1 | |
| 9 | 1569465990 | LAMP TIMER | 1 | REPLACES P/N 0602201273 |
| 10 | 0017105016 | HEX HEAD BOLT | 1 | |
| 11 | 1747260604 | EMERGENCY UNIT | 1 | REPLACES P/N 0602200475 |
| 12 | 0017105025 | HEX HEAD BOLT | 4 | |
| 13 | 0601815731 | TERMINAL BOARD | 1 | |
| 13A | A9521003604 | SEAL | 1 | |
| 14 | 0601815759 | TERMINAL BOARD | 1 | |
| 14A | D9522000704 | SEAL | 1 | |
| 15 | 0027105020 | MACHINE SCREW | 4 | |
| 16 | B0352500104 | FUSE BOX | 1 | |
| 16A | 0601806642 | FUSE, 5A | 4 | |
| 16B | 0601806643 | FUSE, 15A | 2 | |
| 16C | 0601806644 | FUSE, 30A | 2 | |
| 17 | 0027105020 | MACHINE SCREW | 2 | |
| 18 | 0601827350 | CONTROL UNIT | 1 | |
| 19 | 0027104010 | MACHINE SCREW | 2 | |
| 20 | 1584464603 | REGULATOR | 1 | REPLACES P/N 1584464600 |
| 21 | 0017105025 | HEX HEAD BOLT | 2 | |
| 22 | 1622636103Z | ROTARY SOLENOID | 1 | REPLACES P/N 1620150404 |
| 23 | 1992636004 | ARM, SOLENOID | 1 | |
| 24 | 0050403020 | SPRING PIN | 1 | |
| 25 | 011606025 | HEX HEAD BOLT | 1 | REPLACES P/N 0010106025 |
| 25A | 020106050 | HEX NUT | 1 | REPLACES P/N 0030006000 |
| 26 | 0023706000 | HEX NUT | 2 | REPLACES P/N 0207206000 |
| 27 | D2356300004 | GOVERNOR ROD | 1 | |
| 28 | 0401450080 | WASHER, FLAT | 1 | REPLACES P/N 031108160 |
| 29 | 0605010503 | SNAP PIN | 1 | |
| 30 | 0042806000 | WASHER, FLAT | 1 | |
| 31 | 505015300 | SNAP PIN | 1 | REPLACES P/N 0605010502 |
| 32 | 0010108050 | HEX HEAD BOLT | 1 | |
| 32A | 020108060 | HEX NUT | 1 | REPLACES P/N 0207008000 |
| 33 | 0601806640 | FUSE, 65A | 1 | |
| 34 | A5485500004 | GUIDE | 1 | |
| 35 | 0016906016 | HEX HEAD BOLT | 2 | |
| 36 | Y0226900360 | RUBBER SEAL | 1 | |

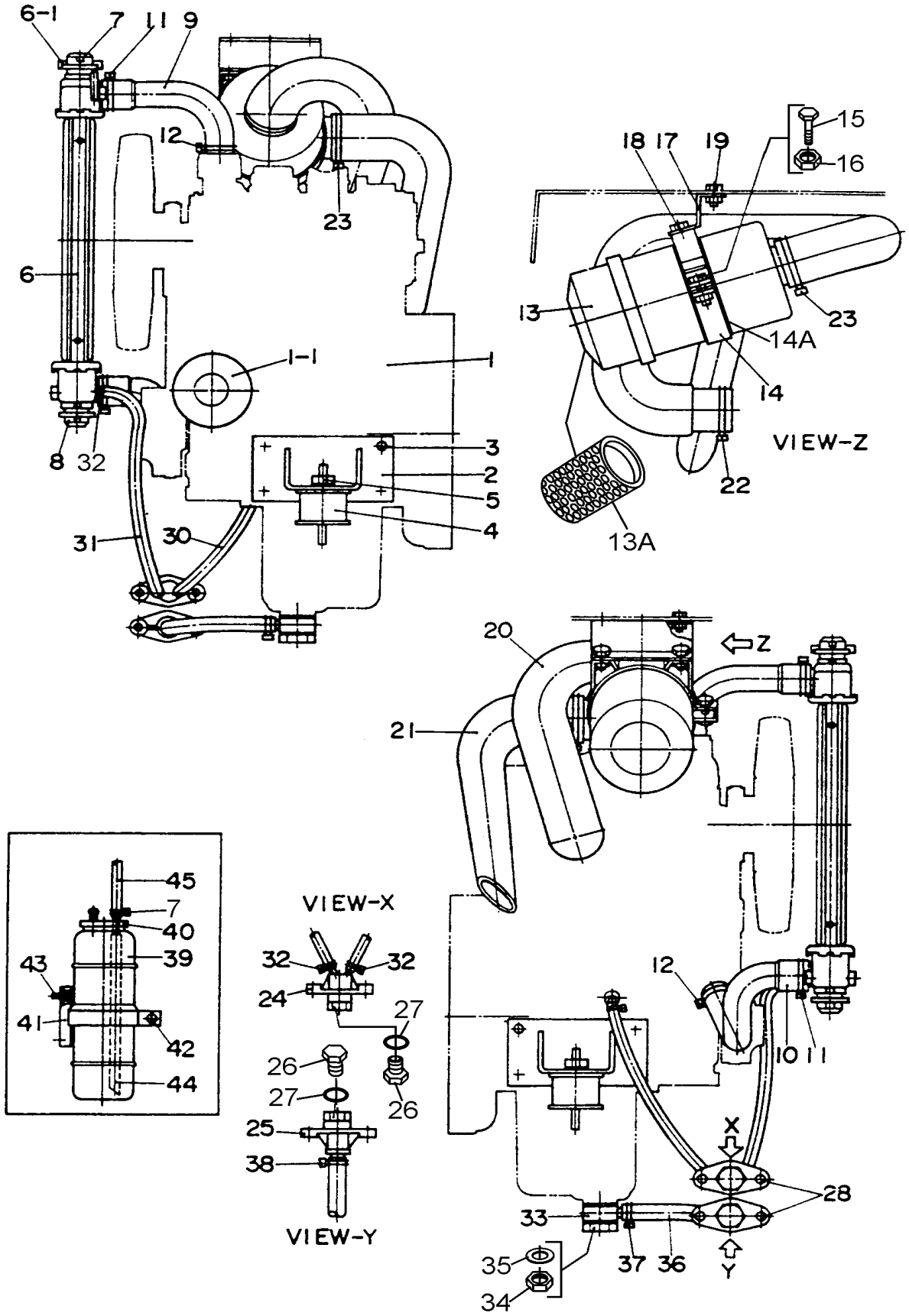
6-1
7
11
9
12
23
6
1-1
1
8
32
3
2
5
4
31
30
15
16
18
17
19
13
23
14A
14
VIEW-Z
22
13A
20
Z
21
45
7
40
39
43
41
42
44
VIEW-X
32
32
24
27
26
27
26
25
38
VIEW-Y
12
10
11
X
28
33
35
34
37
36
Y

| NO. | PART NO. | PART NAME | QTY. | REMARKS |
|---|---|---|---|---|
| 1 | A5924200094A | ENGINE, KUBOTA Z482E4B | 1 | REPLACES P/N A5924200094 |
| 1-1 | HH15032430 | CARTRIDGE, OIL FILTER | 1 | REPLACES P/N 1585332435 |
| 2 | 8745112003A | ENGINE FOOT | 2 | REPLACES P/N 8745112003 |
| 3 | Y0341110020 | HEX HEAD BOLT | 8 | |
| 4 | 7085419004 | RUBBER SUSPENSION | 2 | |
| 5 | 021112140 | HEX NUT | 2 | REPLACES P/N 0207010000 |
| 6 | 0602012795 | RADIATOR | 1 | |
| 6-1 | 0602011079 | CAP, RADIATOR | 1 | |
| 7 | 0605515170 | HOSE BAND | 3 | |
| 8 | B1312600004 | RUBBER MOUNT | 2 | |
| 9 | A6311500004 | RADIATOR HOSE, UPPER | 1 | |
| 10 | A6311500103 | RADIATOR HOSE, LOWER | 1 | |
| 11 | 0605515134 | HOSE BAND HS-16 | 2 | |
| 12 | 0605515003 | HOSE BAND, Ø30 | 2 | |
| 13 | 1556211010 | AIR CLEANER. | 1 | REPLACES P/N 0602046265 |
| 13A | 7000011221 | ELEMENT, AIR CLEANER | 1 | REPLACES P/N 0602046374 |
| 14 | 3415013960 | BAND, AIR CLEANER | 1 | REPLACES P/N 0602040575 |
| 14A | 0222600340 | RUBBER CUSHION | 1 | |
| 15 | 011208030 | HEX HEAD BOLT | 1 | REPLACES P/N 0016908030 |
| 16 | 020108060 | HEX NUT | 1 | REPLACES P/N 0207008000 |
| 17 | 8742031004 | BRACKET, AIR CLEANER | 1 | |
| 18 | 011008020 | HEX HEAD BOLT | 2 | REPLACES P/N 0016908020 |
| 19 | 011106015 | HEX HEAD BOLT | 2 | REPLACES P/N 0016906015 |
| 20 | 8742032003A | HOSE, AIR CLEANER | 1 | REPLACES P/N 8742032003 |
| 21 | 1612036203 | HOSE, AIR CLEANER | 1 | |
| 22 | 0605515006 | HOSE BAND, Ø50 | 1 | |
| 23 | 0602014302 | HOSE BAND, Ø55 | 2 | REPLACE P/N 0605515021 |
| 24 | 1622014103 | DRAIN JOINT, WATER | 1 | |
| 25 | 1502025103C | DRAIN JOINT, OIL | 1 | REPLACES P/N 1502025103 |
| 26 | 0802011104 | PLUG | 2 | |
| 27 | 0150000018 | O-RING, A P18 | 2 | |
| 28 | 011106015 | HEX HEAD BOLT | 4 | REPLACES P/N 0016906015 |
| 29 | 0802120604 | PACKING | 1 | |
| 30 | 0199900550 | DRAIN HOSE | 1 | |
| 31 | 0199900500 | DRAIN HOSE | 1 | |
| 32 | 0605515170 | HOSE BAND | 4 | |
| 33 | 0805010004 | DRAIN JOINT | 1 | |
| 34 | 1552053004 | JOINT BOLT | 1 | |
| 35 | 0602021190 | PACKING, SW22 | 1 | |
| 36 | 0192200400 | DRAIN HOSE | 1 | |
| 37 | 0605515073 | HOSE BAND, HS-10 | 1 | |
| 38 | 0605515073 | HOSE BAND, HS-10 | 1 | |
| 39 | 0802081403 | RESERVE TANK | 1 | |
| 40 | 0802081104 | CAP, RESERVE TANK | 1 | |
| 41 | 1622082104 | BRACKET, RESERVE TANK | 1 | |
| 42 | 011606025 | HEX HEAD BOLT | 1 | REPLACES P/N 0016906025 |
| 43 | 011106015 | HEX HEAD BOLT | 2 | REPLACES P/N 0016906015 |
| 44 | 0199100215 | HOSE | 1 | |
| 45 | 0199900420 | HOSE | 1 | |

# OIL FILTER RETROFIT ASSY. (DA7000SSA2GH)

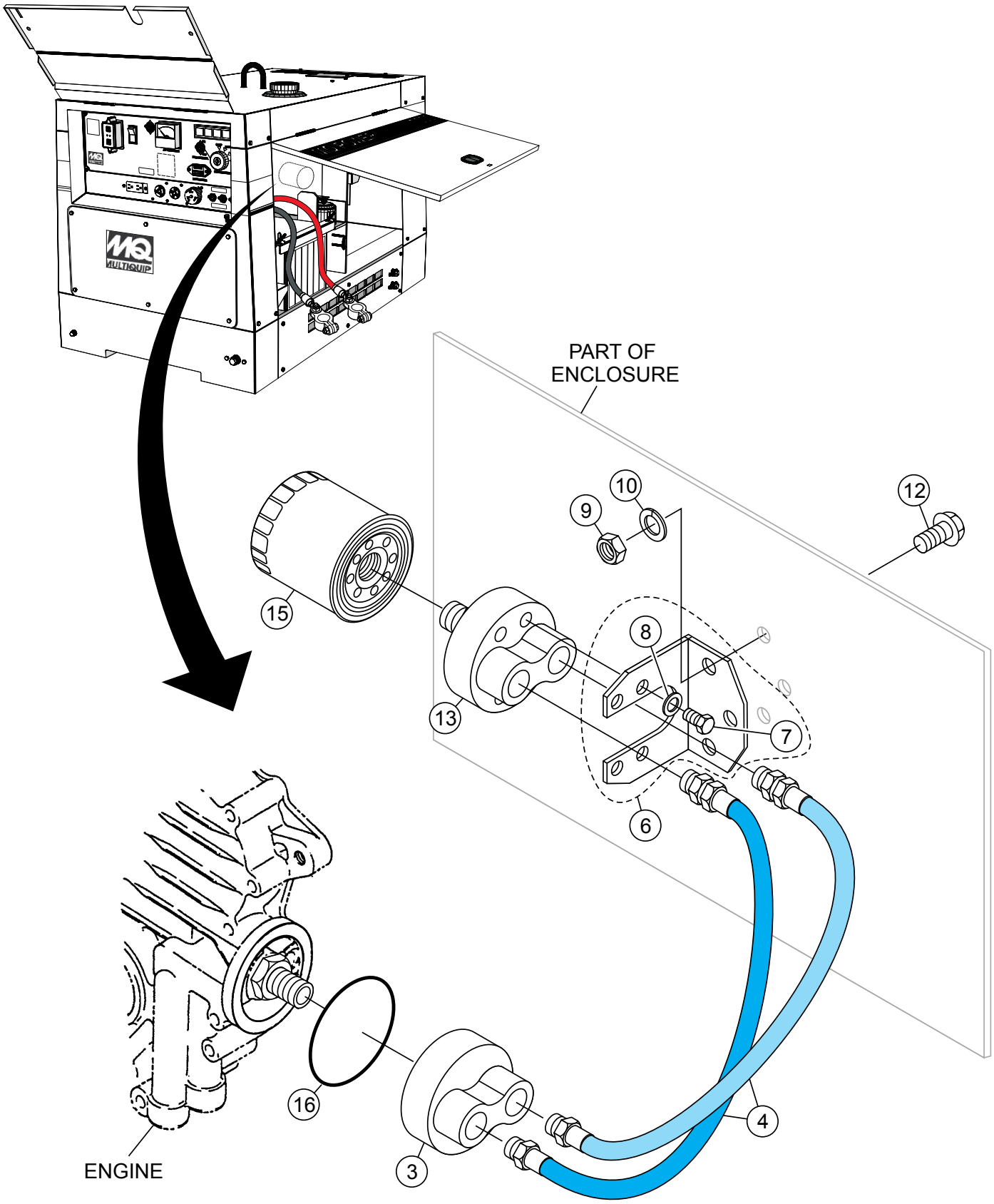

# OIL FILTER RETROFIT ASSY. (DA7000SSA2GH)

| NO. | PART NO. | PART NAME | QTY. | REMARKS |
|---|---|---|---|---|
| 3 | 148002003 | ADAPTER FILTER | 1 | |
| 4 | 010601000 | HOSE KIT | 1 | |
| 6 | 149149001 | BRACKET | 1 | INCLUDES ITEMS W/# |
| 7# | | BOLT | 4 | NOT SOLD SEPARATELY |
| 8# | | LOCKWASHER | 4 | NOT SOLD SEPARATELY |
| 9 | DA7000NUT | NUT | 3 | |
| 10 | DA7000LOCKWASHER | LOCKWASHER | 3 | |
| 12 | DA7000BOLT | BOLT | 3 | |
| 13 | 149002000 | FILTERHEAD | 1 | |
| 15 | 7000015241 | SPIN-ON OIL FILTER | 1 | |
| 16 | 414537501 | OIL SEAL | 1 | |

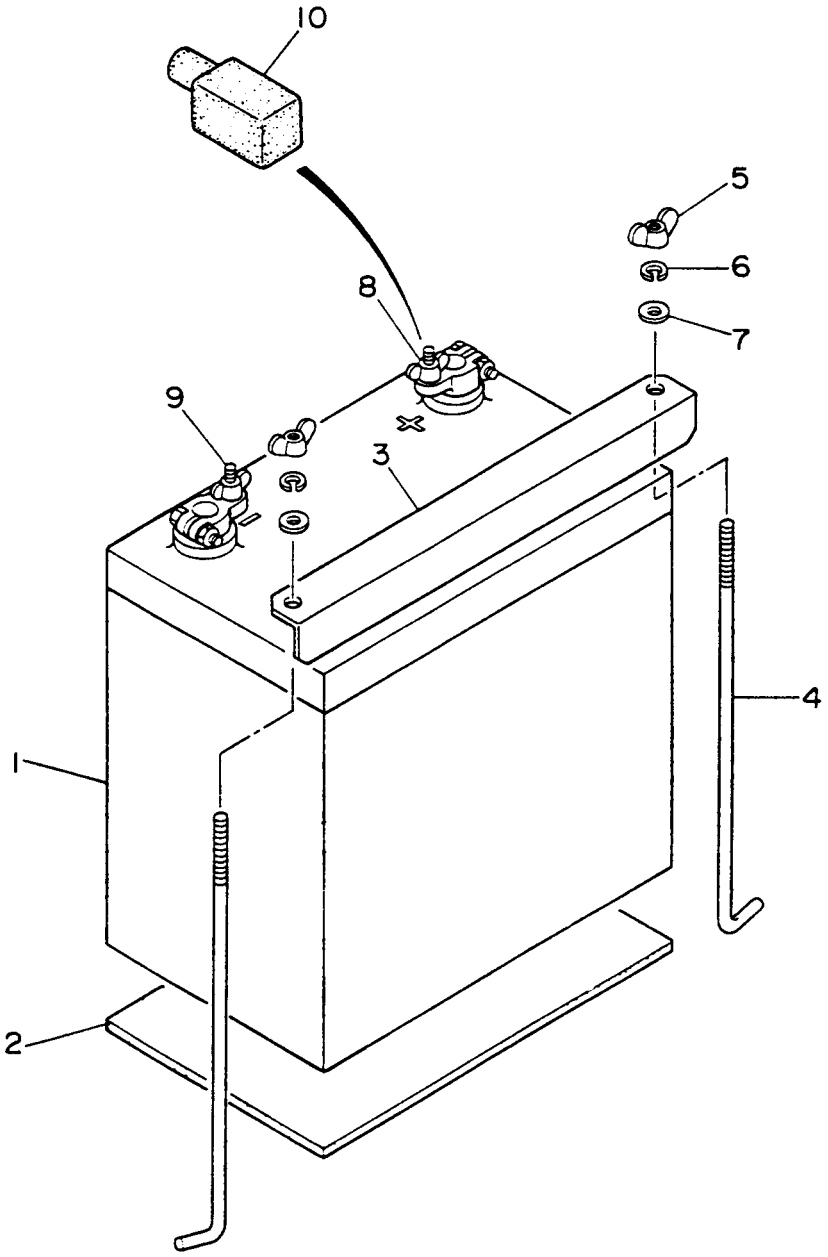
10
5
6
8
7
9
3
4
1
2

| NO. | PART NO. | PART NAME | QTY. | REMARKS |
|---|---|---|---|---|
| 1 | Y0165103820 | BATTERY, 38B20R | 1 | |
| 2 | 0805081004 | BATTERY SHEET | 1 | REPLACES P/N 1702202104 |
| 3 | D2345200004 | BATTERY BAND | 1 | |
| 4 | 0805082704 | BATTERY BOLT | 2 | |
| 5 | 0037806000 | WING NUT | 2 | |
| 6 | 0040006000 | WASHER, LOCK | 2 | |
| 7 | 952404470 | WASHER, FLAT | 2 | REPLACES P/N 0041206000 |
| 8 | 0602220311 | TERMINAL ASSY. (POSITIVE) | 1 | REPLACE P/N 0602220310 |
| 9 | 0602220311 | TERMINAL ASSY. (NEGATIVE) | 1 | |
| 10 | 0845040414 | TERMINAL CAP | 1 | REPLACES P/N 0602220600 |

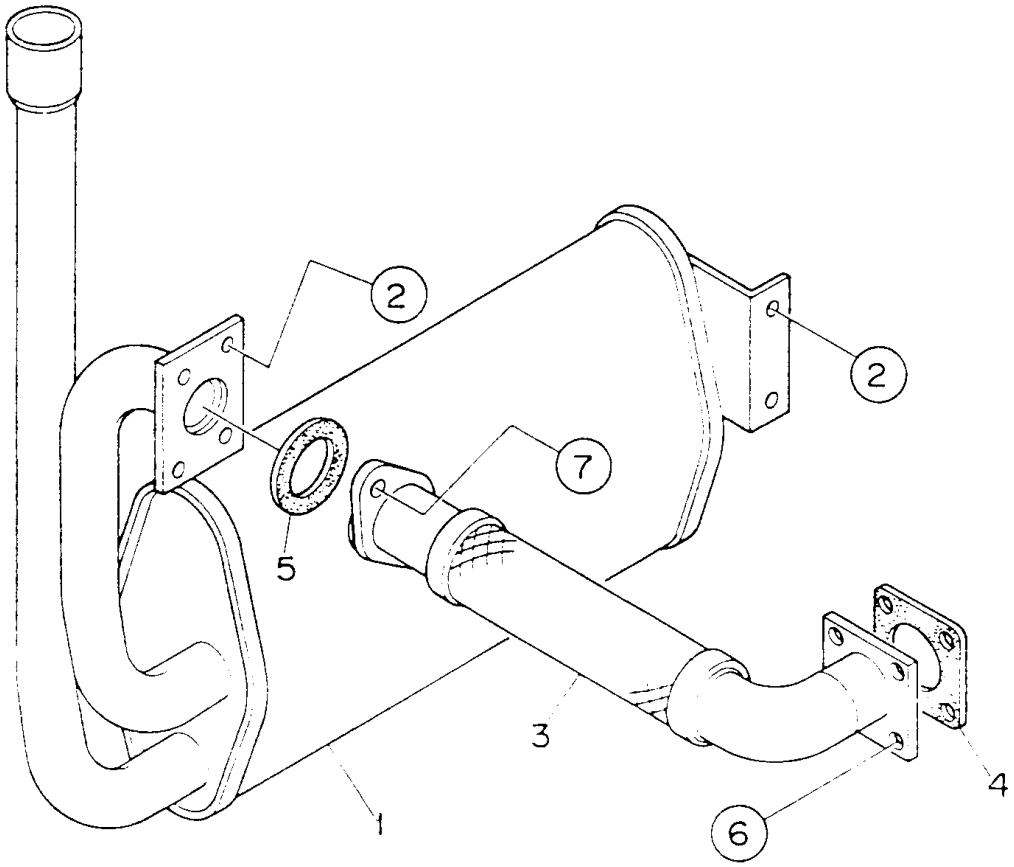
2
2
7
5
3
4
1
6

| NO. | PART NO. | PART NAME | QTY. | REMARKS |
|---|---|---|---|---|
| 1 | D2332100003A | MUFFLER | 1 | REPLACES P/N D2332100003 |
| 2 | 011008020 | HEX. HEAD BOLT | 4 | REPLACES P/N 0016908020 |
| 3 | D2335000003 | EXHAUST PIPE | 1 | |
| 4 | 1526312370 | GASKET | 1 | REPLACES P/N 1526312371 |
| 5 | D9304000004 | GASKET | 1 | |
| 6 | 020108060 | HEX. NUT | 4 | REPLACES P/N 0207008000 |
| 7 | 0012108035 | HEX. HEAD BOLT | 2 | REPLACES P/N 0016908035 |

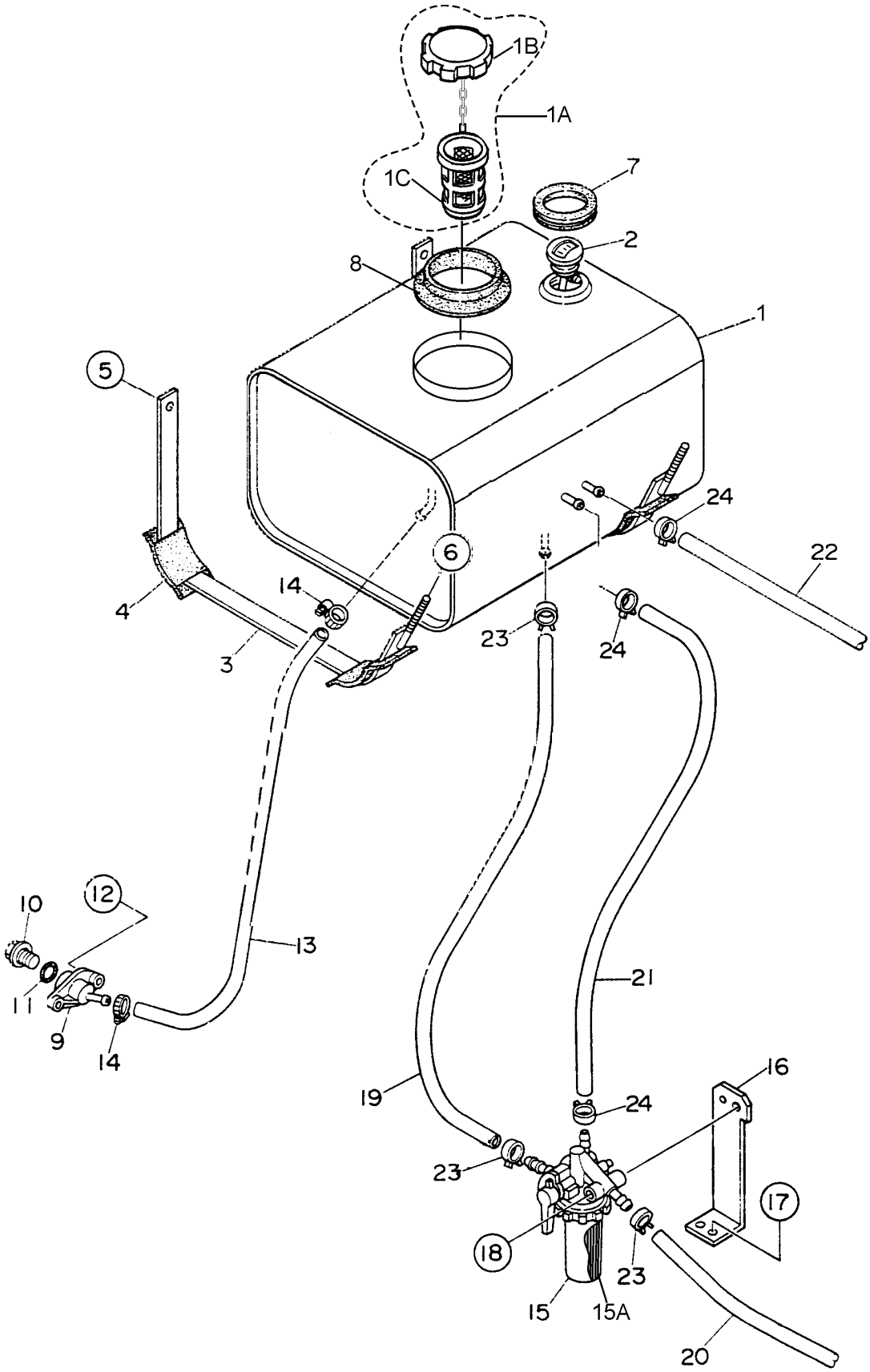
1B
1A
1C
7
2
8
1
5
24
22
6
14
4
23
24
3
10
12
13
21
11
9
14
16
19
24
23
17
18
23
15
15A
20

| NO. | PART NO. | PART NAME | QTY. | REMARKS |
|---|---|---|---|---|
| 1 | D2365000013B | FUEL TANK | 1 | REPLACES P/N D2365000013 |
| 1A | A9924800024 | FUEL TANK CAP ASSY. | 1 | INCLUDES ITEM W/# |
| 1B# | 0810105800 | CAP, FUEL TANK | | |
| 1C# | 0810105900 | FUEL STRAINER | 1 | |
| 2 | 0602125033 | FUEL GAUGE | 1 | |
| 3 | D2365200004B | TANK BAND | 2 | REPLACES P/N D2365200004 |
| 4 | 0805003414 | PAD, TANK BAND | 4 | |
| 5 | 011106015 | HEX. HEAD BOLT | 2 | REPLACES P/N 0016906015 |
| 6 | 0207308000 | HEX. NUT | 2 | |
| 7 | D1490600104 | RUBBER SEAL | 1 | |
| 8 | B9312400004 | RUBBER SEAL | 1 | |
| 9 | 7812014003 | DRAIN JOINT | 1 | |
| 10 | 0802011104 | PLUG | 1 | |
| 11 | 0150000018 | O-RING | 1 | |
| 12 | 0017106016 | HEX. HEAD BOLT | 2 | |
| 13 | 0199900670 | DRAIN HOSE | 1 | |
| 14 | 0605515170 | HOSE BAND | 2 | |
| 15 | 1553143010 | FUEL FILTER | 1 | REPLACES P/N 1553143012 |
| 15A | 1523143560 | ELEMENT, FUEL FILTER | 1 | REPLACES P/N 0602042171 |
| 16 | D2368700004B | BRACKET, FUEL FILTER | 1 | REPLACES P/N D2368700004 |
| 17 | 0016906016 | HEX. HEAD BOLT | 2 | |
| 18 | 0016908065 | HEX. HEAD BOLT | 1 | |
| 19 | 0966180240 | SUCTION HOSE | 1 | REPLACES P/N 0605513158 |
| 20 | 0966180400 | SUCTION HOSE | 1 | REPLACES P/N 0605513101 |
| 21 | 0966140320 | RETURN HOSE | 1 | REPLACES P/N 0605514101 |
| 22 | 0966140240 | RETURN HOSE | 1 | REPLACES P/N 0605514102 |
| 23 | 1491142750 | HOSE BAND | 4 | REPLACES P/N 0605515070 |
| 24 | 1024442320 | HOSE BAND | 4 | REPLACES P/N 0605515072 |

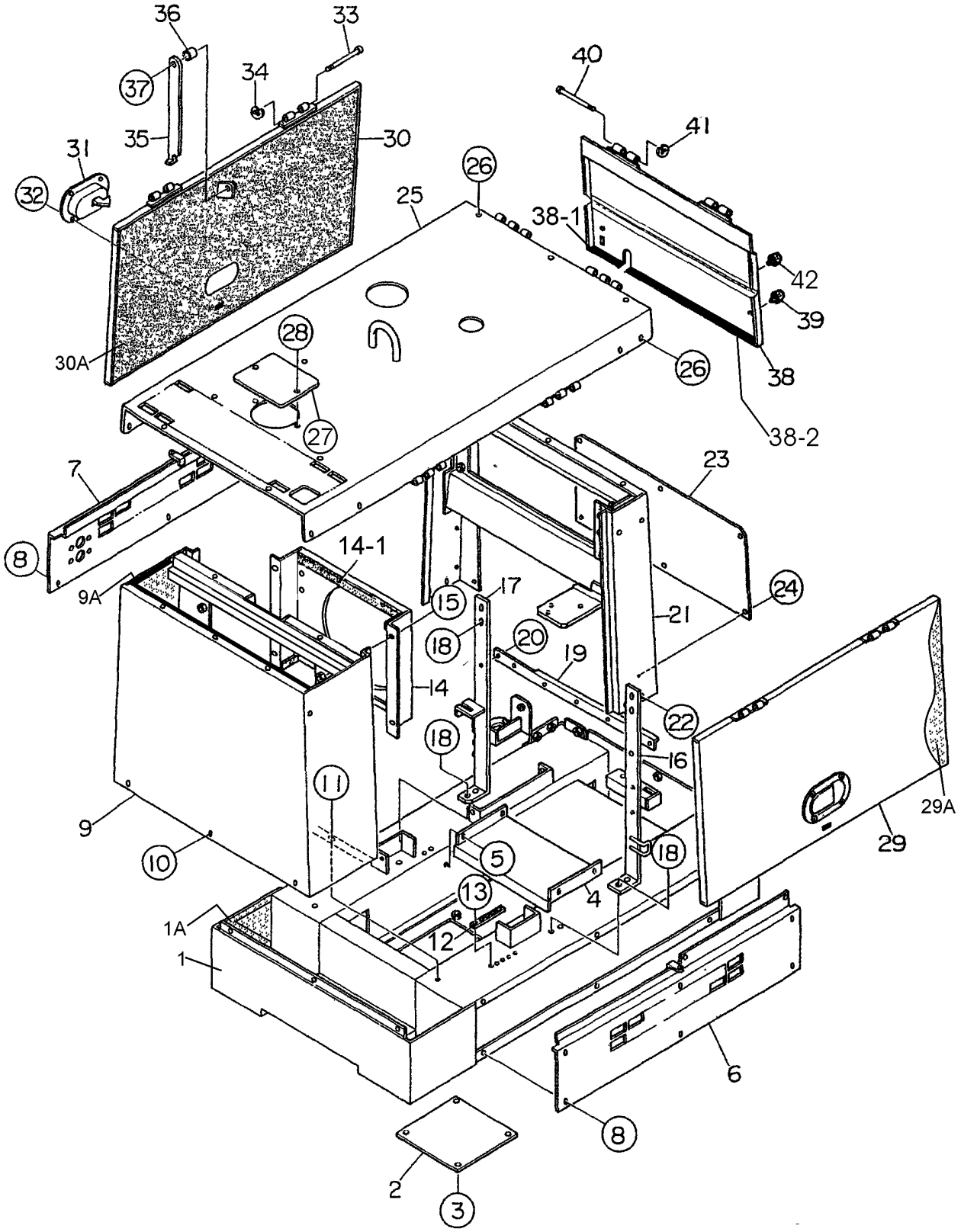
36
33
37
34
40
41
35
30
31
32
26
25
38-1
42
39
28
30A
26
38
27
38-2
7
23
8
14-1
9A
15
17
24
21
18
20
19
14
22
18
16
11
29A
9
29
10
5
18
13
4
1A
12
1
6
8
2
3

| NO. | PART NO. | PART NAME | QTY. | REMARKS |
|---|---|---|---|---|
| 1 | A5415000212 | BASE | 1 | |
| 1A | D2492100004 | LINING | 1 | |
| 2 | D2415100004 | FLOOR PANEL | 1 | |
| 3 | 011106015 | HEX HEAD BOLT | 4 | REPLACES P/N 0016906015 |
| 4 | A5415600114 | DUCT | 1 | |
| 5 | 011106015 | HEX HEAD BOLT | 5 | REPLACES P/N 0016906015 |
| 6 | D2455200113 | SPLASHER PANEL | 1 | |
| 7 | D2455200003A | SPLASHER PANEL | 1 | REPLACES P/N D2455200003 |
| 8 | 011106015 | HEX HEAD BOLT | 12 | REPLACES P/N 0016906015 |
| 9 | D2425000022MQW | FRONT FRAME | 1 | REPLACES P/N D2425000032 |
| 9A | Y0317900370 | RUBBER SEAL | 2 | |
| 10 | 011106015 | HEX HEAD BOLT | 3 | REPLACES P/N 0016906015 |
| 11 | 011008020 | HEX HEAD BOLT | 2 | REPLACES P/N 0016908020 |
| 12 | 8511864601A | TERMINAL PLATE | 1 | REPLACES P/N 8511864604 |
| 13 | 011106015 | HEX HEAD BOLT | 5 | REPLACES P/N 0016906015 |
| 14 | D2311300003 | FAN SHROUD | 1 | |
| 14-1 | Y0315500370 | LINING | 2 | |
| 15 | 011106015 | HEX HEAD BOLT | 4 | REPLACES P/N 0016906015 |
| 16 | A5435300203 | HANGER | 1 | |
| 17 | A5435300403 | HANGER | 1 | |
| 18 | 012210025 | HEX HEAD BOLT | 8 | REPLACES P/N 0012310025 |
| 19 | D2485500014 | HARNESS GUIDE | 1 | |
| 20 | 011106015 | HEX HEAD BOLT | 2 | REPLACES P/N 0016906015 |
| 21 | A5444000802 | REAR FRAME | 1 | |
| 22 | 011106015 | HEX HEAD BOLT | 4 | REPLACES P/N 0016906015 |
| 23 | D2445300004 | COVER, REAR FRAME | 1 | |
| 24 | 011106015 | HEX HEAD BOLT | 6 | REPLACES P/N 0016906015 |

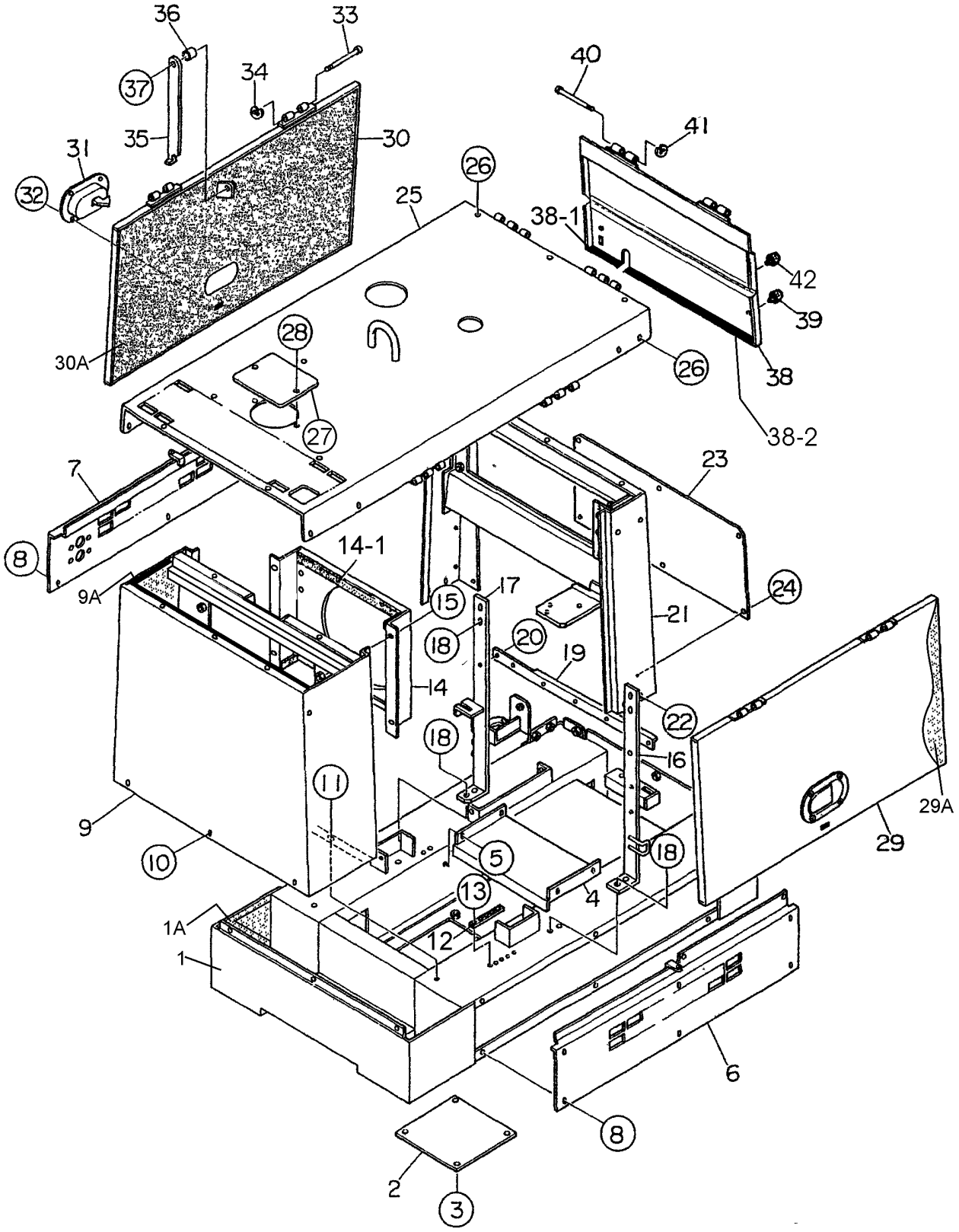
36
33
37
34
40
41
35
30
31
32
26
25
38-1
42
39
28
30A
26
38
27
38-2
7
23
8
14-1
9A
15
17
24
21
18
20
19
14
22
18
16
11
29A
9
10
5
18
29
13
4
1A
12
1
6
8
2
3

| NO. | PART NO. | PART NAME | QTY. | REMARKS |
|---|---|---|---|---|
| 25 | A5465000112 | ROOF PANEL | 1 | |
| 26 | 011106015 | HEX HEAD BOLT | 15 | REPLACES P/N 0016906015 |
| 27 | 8432081004 | COVER,RADIATOR CAP | 1 | |
| 28 | 011106015 | HEX HEAD BOLT | 2 | REPLACES P/N 0016906015 |
| 29 | D2455000113 | SIDE DOOR | 1 | |
| 29A | A5495400704 | LINING | 1 | |
| 30 | D2455000013 | SIDE DOOR | 1 | |
| 30A | A5495400604 | LINING | 1 | |
| 31 | 0605010215 | DOOR HANDLE | 2 | |
| 32 | 0021805016 | MACHINE SCREW | 8 | |
| 33 | 0810014704 | PIN | 4 | |
| 34 | 0080200004 | SNAP RING | 4 | |
| 35 | D2455700004 | DOOR STAY | 2 | |
| 36 | 7835088004 | COLLAR | 2 | |
| 37 | 011008020 | HEX HEAD BOLT | 2 | REPLACES P/N 0016908020 |
| 38 | A5444200703 | REAR DOOR | 1 | |
| 38-1 | Y0226900205 | RUBBER SEAL | 1 | |
| 38-2 | 0226900300 | RUBBER SEAL | 1 | |
| 39 | 0601851613 | STOPPER | 2 | |
| 40 | 0810014704 | PIN | 2 | |
| 41 | 0080200004 | SNAP RING | 2 | |
| 42 | 0601851660 | STOPPER | 2 | |

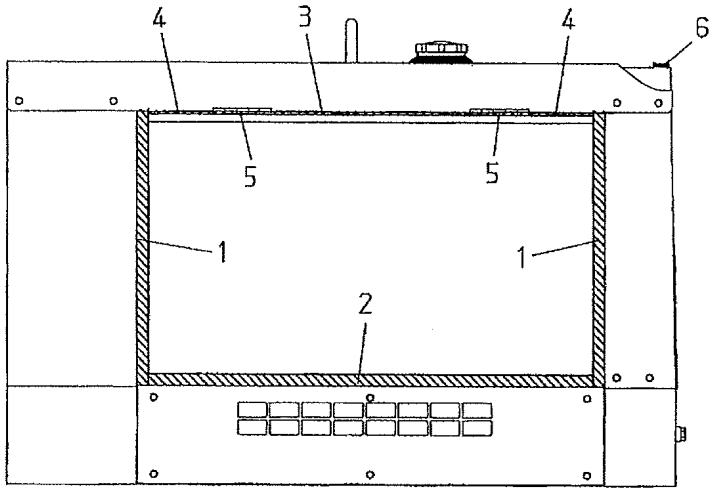
4
3
4
6
5
5
1
1
2

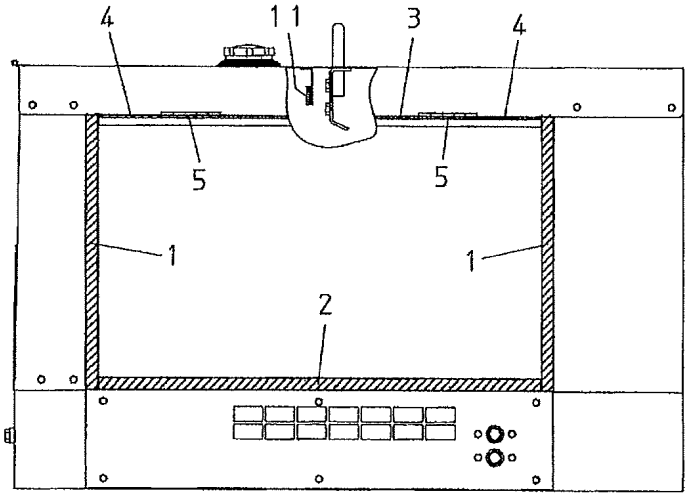
4
11
3
4
5
5
1
1
2

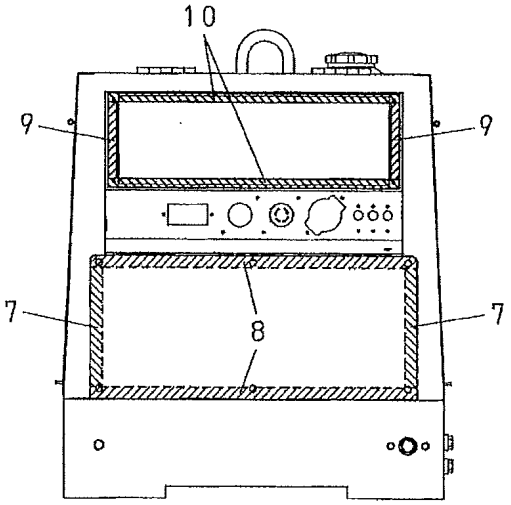
10
9
9
7
8
7

# RUBBER SEALS ASSY.

| NO. | PART NO. | PART NAME | QTY. | REMARKS |
|---|---|---|---|---|
| 1 | Y0221200470 | RUBBER SEAL | 4 | |
| 2 | 0221200760 | RUBBER SEAL | 2 | |
| 3 | Y0221200325 | RUBBER SEAL | 2 | |
| 4 | Y0221200125 | RUBBER SEAL | 4 | |
| 5 | 0222600100 | RUBBER SEAL | 4 | |
| 6 | 0228300600 | RUBBER SEAL | 1 | |
| 7 | 0228300200 | RUBBER SEAL | 2 | |
| 8 | 0228300550 | RUBBER SEAL | 2 | |
| 9 | 0227600130 | RUBBER SEAL | 2 | |
| 10 | 0227600500 | RUBBER SEAL | 2 | |
| 11 | 0222100300 | RUBBER SEAL | 1 | |

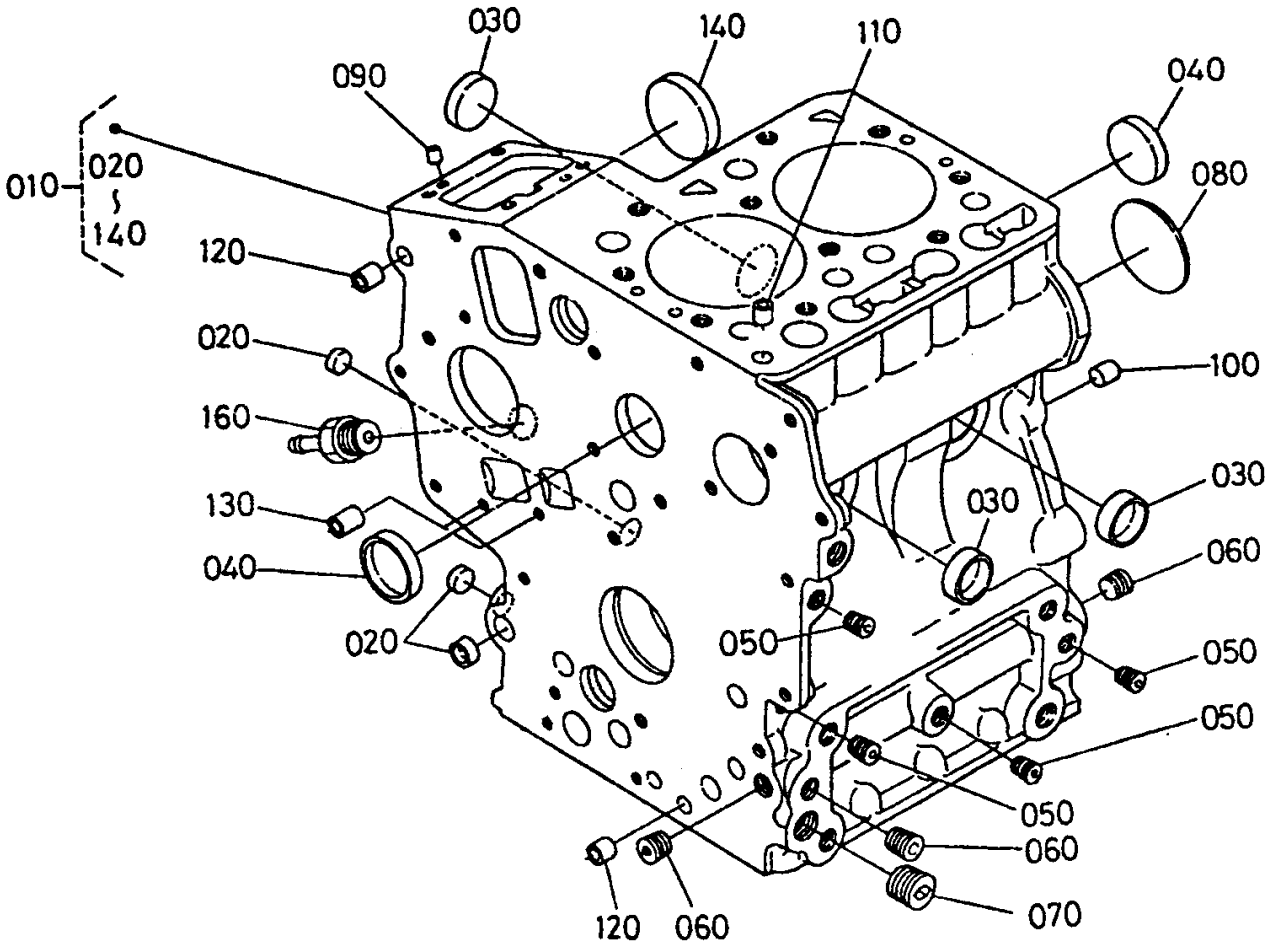
030
140
110
090
040
010
020
140
080
120
020
100
160
030
130
030
040
060
020
050
050
050
050
060
120
060
070

| NO. | PART NO. | PART NAME | QTY. | REMARKS |
|---|---|---|---|---|
| 010 | 1J09001020 | COMP. CRANKCASE | 1 | INCLUDES ITEMS W/$ |
| 020$ | 1685196260 | CAP, SEALING | 3 | |
| 030$ | 1685196270 | CAP, SEALING | 3 | |
| 040$ | 1545196270 | CAP, SEALING | 2 | |
| 050$ | 1526196010 | PLUG | 4 | |
| 060$ | 1552196020 | PLUG | 3 | |
| 070$ | 1552196030 | PLUG | 1 | |
| 080$ | 1526196160 | PLUG, CONCAVE | 1 | |
| 090$ | 0501200508 | PIN, STRAIGHT | 2 | |
| 100$ | 0501200814 | PIN, STRAIGHT | 2 | |
| 110$ | 1522133650 | PIN, PIPE | 1 | |
| 120$ | 1733159190 | PIN, PIPE | 2 | |
| 130$ | 1733159190 | PIN, PIPE | 2 | |
| 140$ | 1685116212 | COVER, FUEL CAMSHAFT | 1 | |
| 160 | 1584773130 | JOINT, DRAIN PIPE | 1 | |

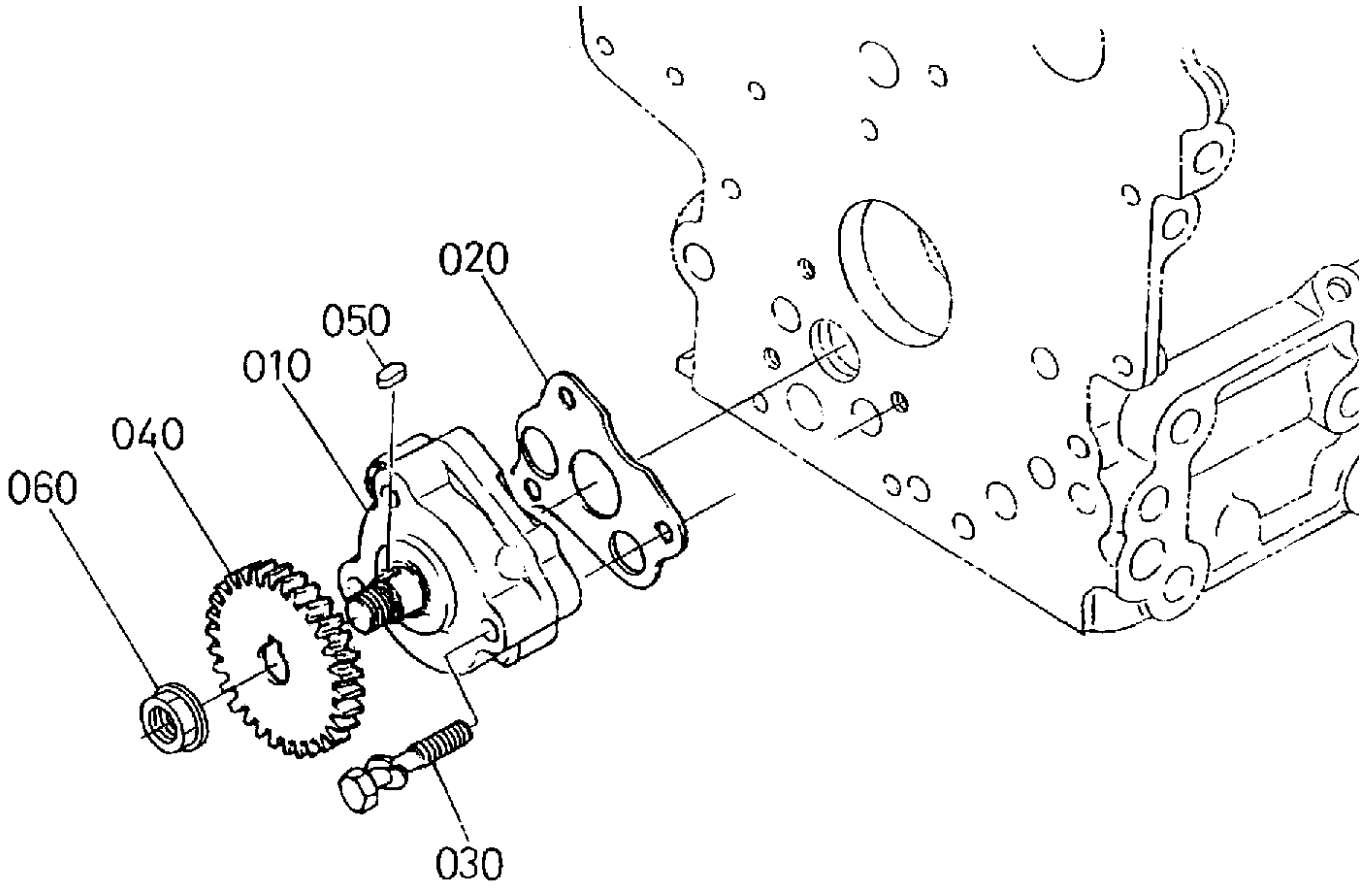
020
050
010
040
060
030

# KUBOTA Z482-E4B ENGINE — OIL PUMP ASSY.

| NO. | PART NO. | PART NAME | QTY. | REMARKS |
|---|---|---|---|---|
| 010 | 1685135012 | OIL PUMP ASSY. | 1 | |
| 020 | 1685135152 | GASKET, OIL PUMP NA | 1 | |
| 030 | 1584191050 | BOLT | 3 | |
| 040 | 1584135660 | GEAR, OIL PUMP DRIVE | 1 | S/N 4DKZ999 AND BELOW |
| 040 | 1G68735660 | GEAR, OIL PUMP DRIVE | 1 | S/N 4DL0001 AND ABOVE |
| 050 | 0571200408 | KEY, FEATHER | 1 | |
| 060 | 0278350100 | NUT, FLANGE | 1 | |

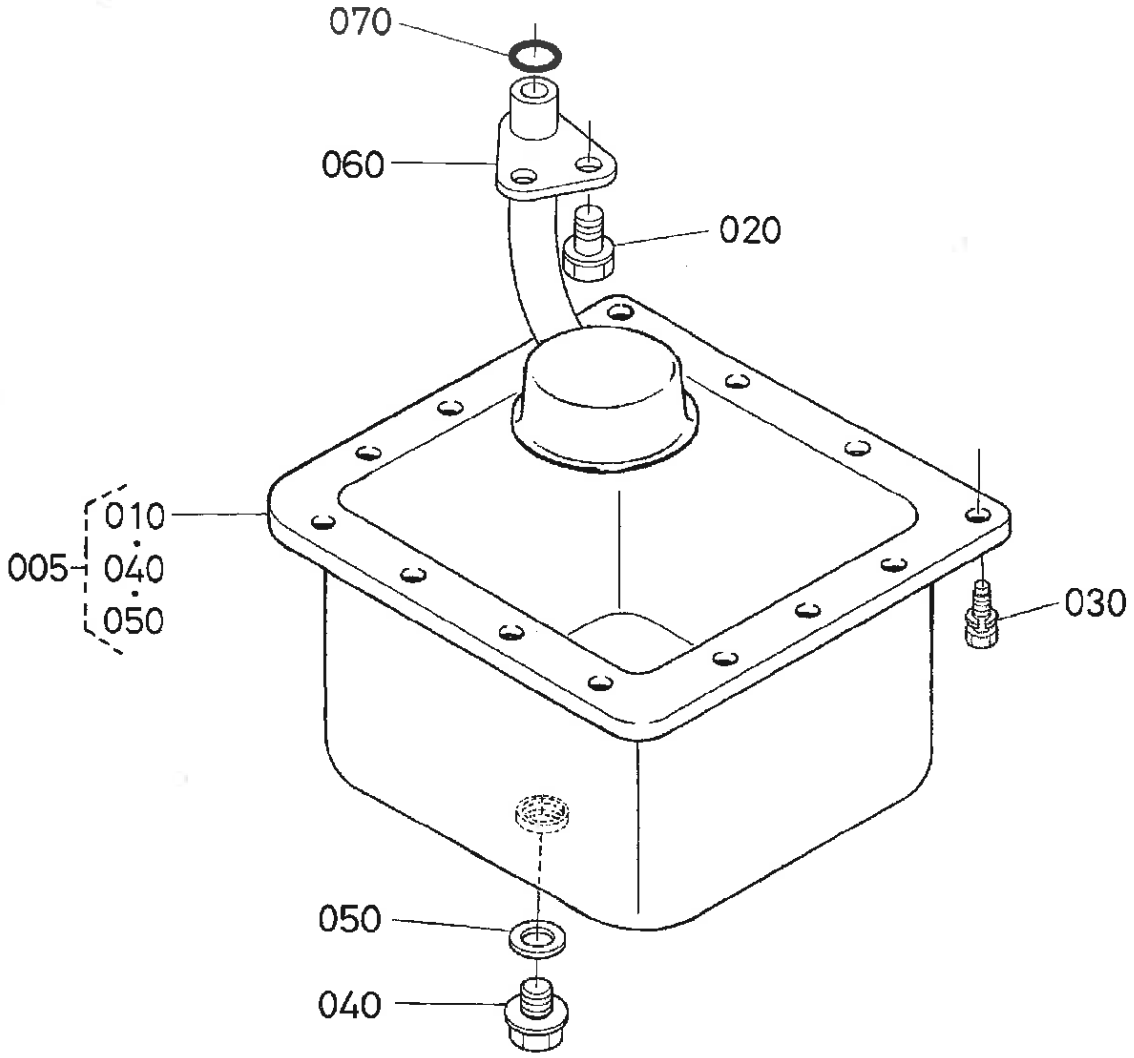
070
060
020
010
005
040
050
030
050
040

| NO. | PART NO. | PART NAME | QTY. | REMARKS |
|---|---|---|---|---|
| 005 | 1756101600 | KIT, OIL PAN | 1 | INCLUDES ITEMS W/$ |
| 010$ | 1756101505 | COMP. OIL PAN | 1 | |
| 020 | 0112350814 | BOLT, SEMS | 1 | |
| 030 | 0102350612 | BOLT, SEMS | 14 | |
| 040$ | 1570733750 | PLUG, DRAIN | 1 | |
| 050$ | 1626596670 | GASKET, PAN OIL | 1 | |
| 060 | 1685132110 | FILTER, OIL | 1 | |
| 070 | 0481400160 | O-RING | 1 | |

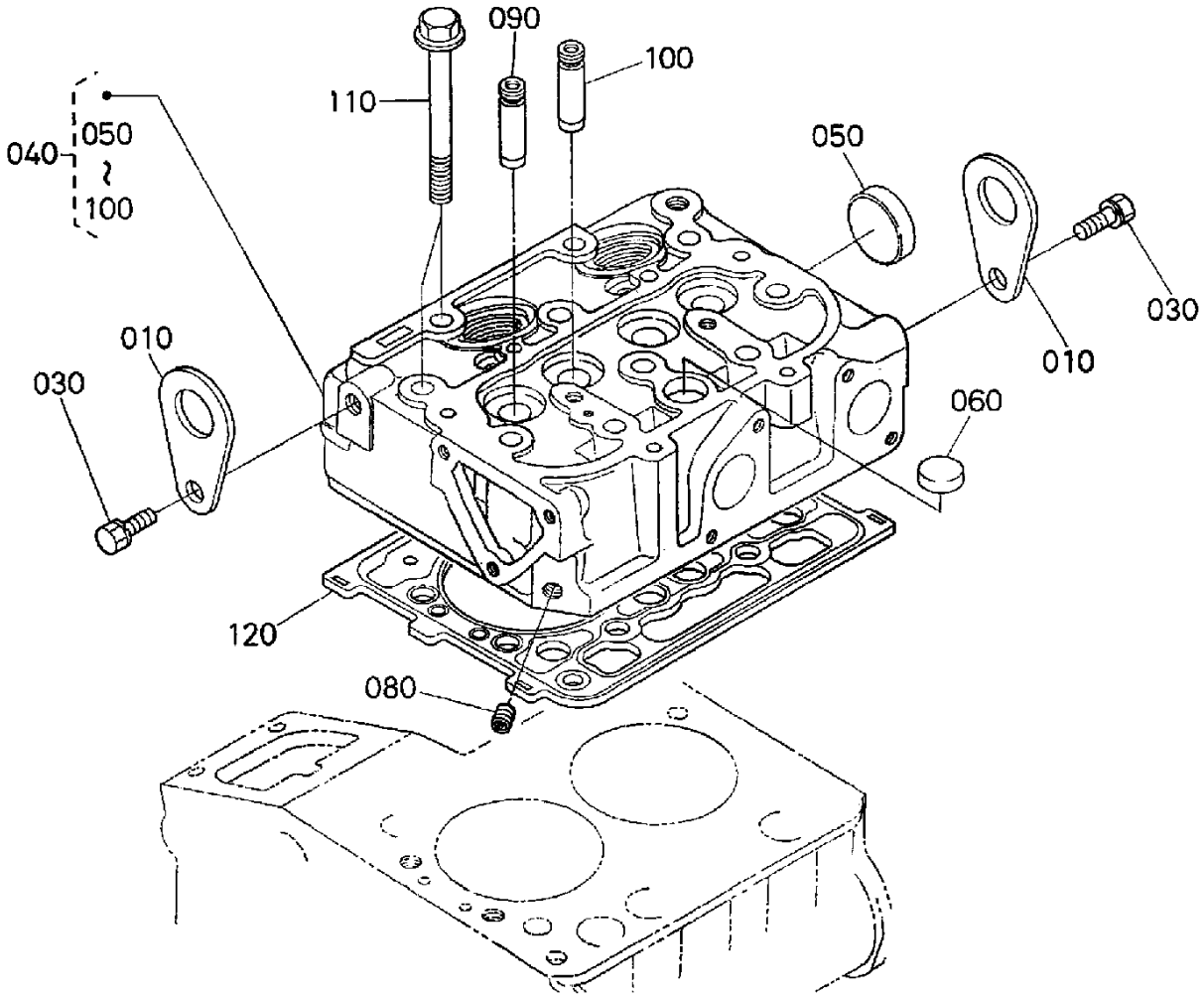
090
100
110
040
050
~
100
050
030
010
010
030
060
120
080

# KUBOTA Z482-E4B ENGINE — CYLINDER HEAD ASSY.

| NO. | PART NO. | PART NAME | QTY. | REMARKS |
|---|---|---|---|---|
| 010 | 1522101750 | HOOK, ENGINE | 2 | |
| 030 | 0112350816 | BOLT, SEMS | 2 | |
| 040 | 1E39103040 | COMP. CYLINDER HEAD | 1 | INCLUDES ITEMS W/$ |
| 050$ | 1532196260 | PLUG, CUP TYPE | 1 | |
| 060$ | 1526103370 | PLUG, CUP TYPE | 1 | |
| 080$ | 1526196010 | PLUG | 1 | |
| 090$ | 1584113540 | GUIDE, INLET VALVE | 2 | |
| 100$ | 1584113560 | GUIDE, EXHAUST VALVE | 2 | |
| 110 | 1460103450 | BOLT, CYLINDER HEAD | 10 | |
| 120 | 1J09003310 | GASKET, CYLINDER HEAD | 1 | |

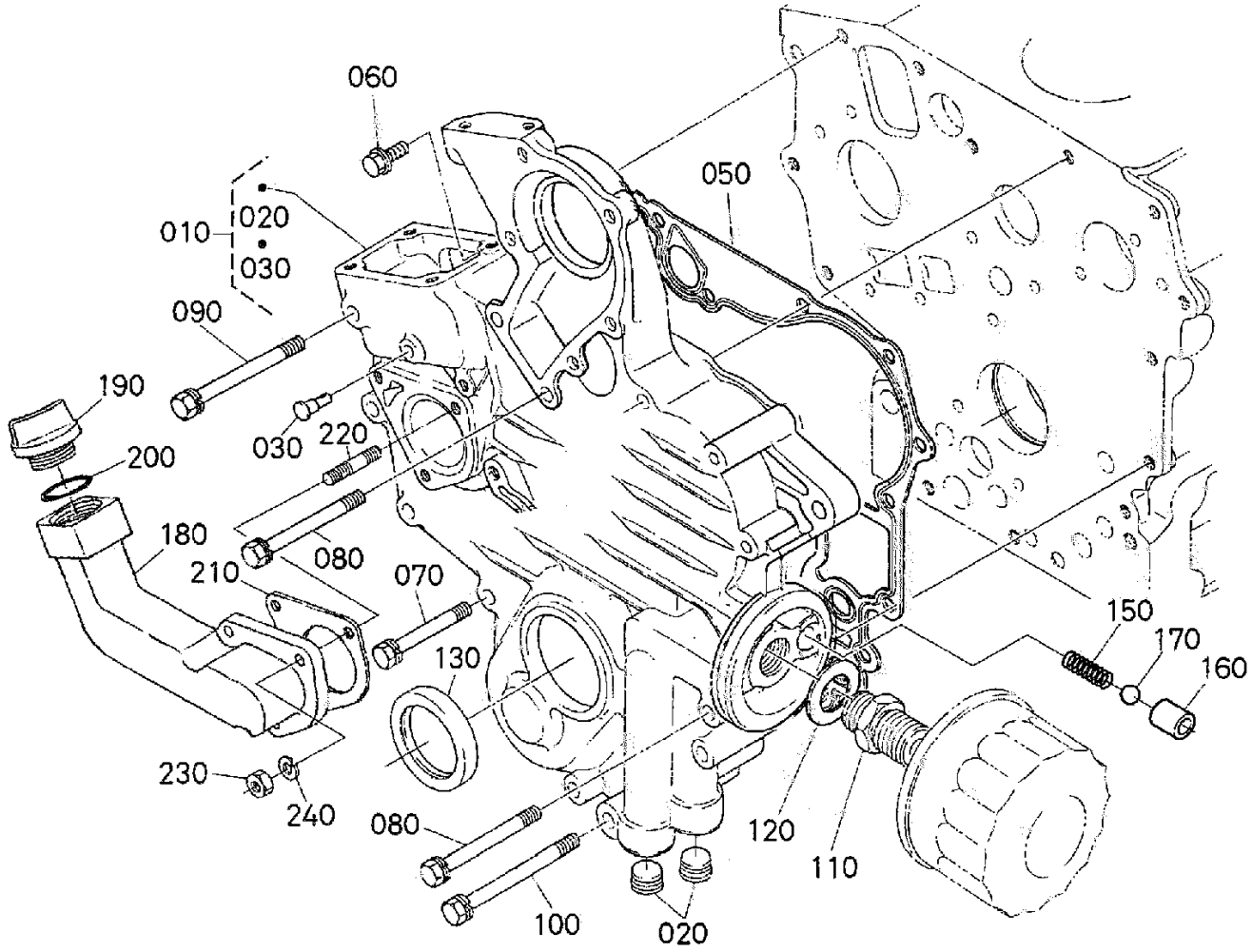
060
050
010
020
030
090
190
200
030
220
180
210
080
070
130
150
170
160
230
240
080
120
110
100
020

| NO. | PART NO. | PART NAME | QTY. | REMARKS |
|---|---|---|---|---|
| 010 | 1E05104024 | COMP. CASE, GEAR | 1 | INCLUDES ITEMS W/$ |
| 020$ | 1552196030 | PLUG | 2 | |
| 030$ | 1584156280 | PIN, START SPRING | 1 | |
| 050 | 1687104130 | GASKET, GEAR CASE | 1 | |
| 060 | 0175450616 | BOLT, FLANGE | 1 | |
| 070 | 0102350650 | BOLT, SEMS | 8 | |
| 080 | 1584191010 | BOLT | 5 | |
| 090 | 0102350670 | BOLT, SEMS | 1 | |
| 100 | 0102350675 | BOLT, SEMS | 1 | |
| 110 | 1524132290 | JOINT, PIPE | 1 | |
| 120 | 1584194010 | WASHER, FLAT | 1 | |
| 130 | 1587704140 | SEAL, OIL | 1 | S/N 4DPZ999 AND BELOW |
| 130 | 1J09404140 | SEAL, OIL | 1 | S/N 4DQ0001 AND ABOVE |
| 150 | 1685136950 | SPRING | 1 | |
| 160 | 1584136930 | SEAT, VALVE | 1 | |
| 170 | 0771503211 | BALL | 1 | |
| 180 | 1584633110 | FLANGE, OIL FILLER | 1 | |
| 190 | 1381133140 | PLUG, OIL FILLER | 1 | |
| 200 | 0481706230 | O-RING | 1 | |
| 210 | 1946188132 | GASKET, H/M GEAR CASE | 1 | |
| 220 | 1522188210 | STUD | 3 | |
| 230 | 0205650060 | HEX NUT | 3 | |
| 240 | 0451250060 | WASHER, SPRING LOCK | 3 | |

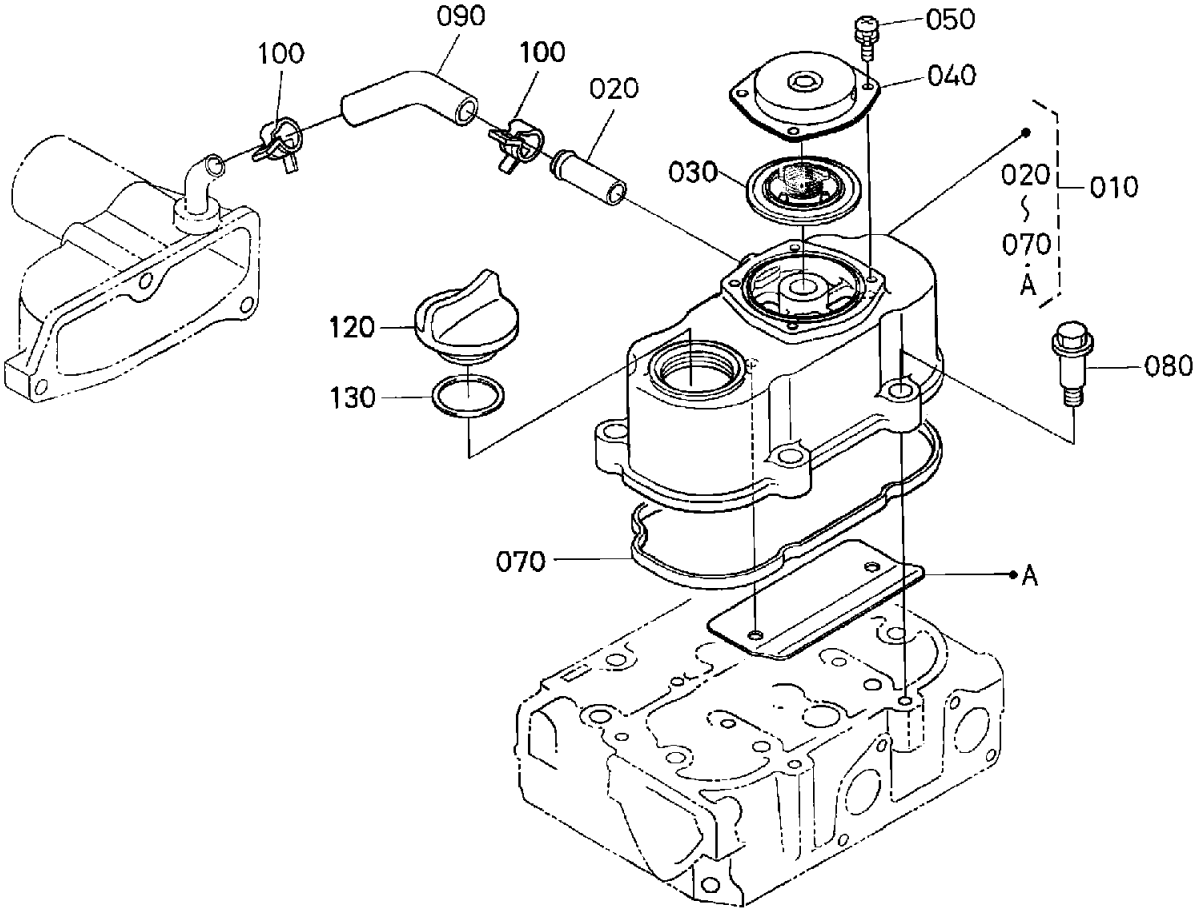
090
100
100
020
050
040
030
020
010
070
A
120
130
080
070
A

# KUBOTA Z482-E4B ENGINE — HEAD COVER ASSY.

| NO. | PART NO. | PART NAME | QTY. | REMARKS |
|---|---|---|---|---|
| 010 | 1G95714504 | COVER, CYLINDER HEAD ASSY. | 1 | INCLUDES ITEMS W/$ |
| 020$ | 1624173370 | PIPE, WATER RETURN | 1 | |
| 030$ | 1G91105203 | COMP. VALVE, BREATHER | 1 | |
| 040$ | 1G80105120 | COVER, BREATHER | 1 | |
| 050$ | 0302450510 | SCREW, SEMS PAN HEAD | 4 | |
| 070$ | 1G95714520 | GASKET, HEAD COVER | 1 | |
| 080 | 1G91191022 | BOLT | 4 | |
| 090 | 1G96005513 | TUBE, BREATHER | 1 | |
| 100 | 0931888125 | CLAMP, HOSE | 2 | |
| 120 | E915133140 | PLUG, OIL FILLER | 1 | |
| 130 | 1J00196770 | O-RING | 1 | |
| A$ | 1G95805370 | SHIELD, BREATHER | 1 | |

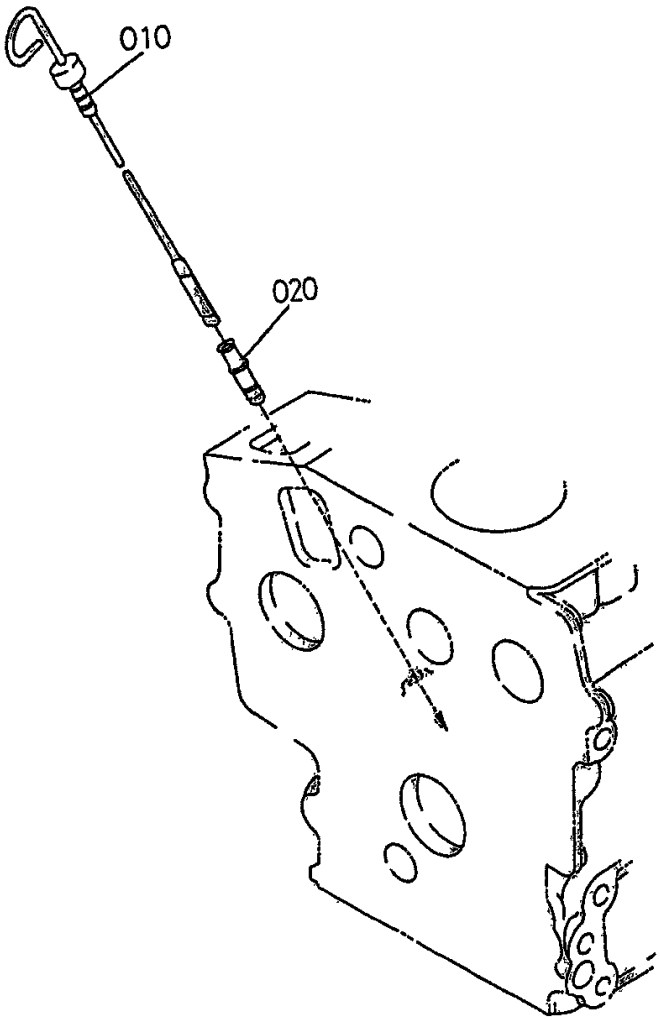
010
020

# KUBOTA Z482-E4B ENGINE — DIPSTICK AND GUIDE ASSY.

| NO. | PART NO. | PART NAME | QTY. | REMARKS |
|---|---|---|---|---|
| 010 | 1G30436410 | GAUGE, OIL | 1 | |
| 020 | 1745636420 | GUIDE, OIL GAUGE | 1 | |

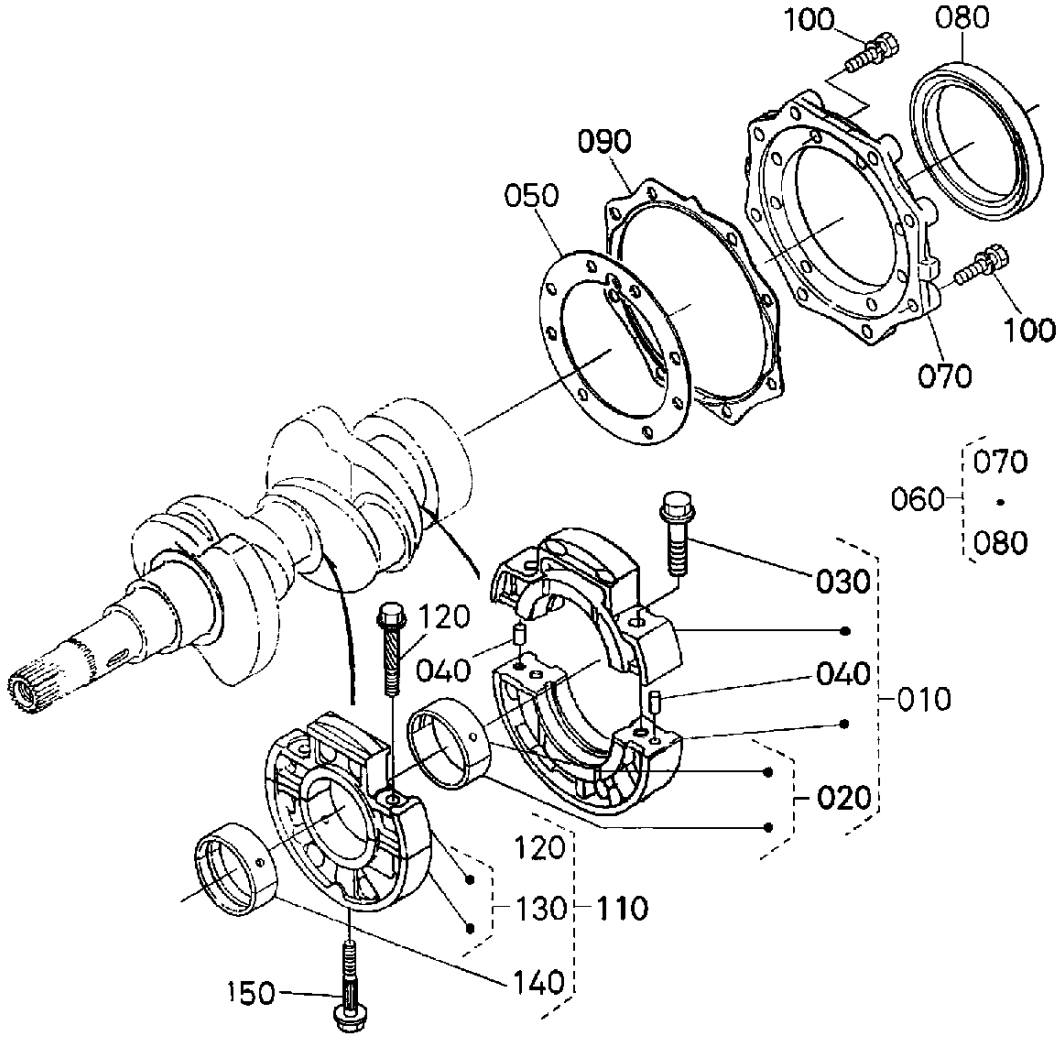
100
080
090
050
100
070
070
060
080
030
120
040
040
010
020
120
130
110
150
140

# KUBOTA Z482-E4B ENGINE — MAIN BEARING CASE ASSY.

| NO. | PART NO. | PART NAME | QTY. | REMARKS |
|---|---|---|---|---|
| 010 | 1J00207090 | CASE, WHEEL BEARING ASSY. | 1 | INCLUDES ITEMS W/$ |
| 020$ | 1569423482 | METAL, CRANKSHAFT STD/SET | 1 | |
| 020$ | 1569423932 | METAL, CRANKSHAFT, -0.20MM/SET | 1 | |
| 020$ | 1569423942 | METAL, CRANKSHAFT, -0.40MM/SET | 1 | |
| 030$ | 0175450840 | BOLT, FLANGE | 2 | |
| 040$ | 0501200608 | PIN, STRAIGHT | 2 | |
| 050 | 1585204360 | GASKET, BEARING CASE | 1 | |
| 060 | 1584104803 | COVER, BEARING CASE ASSY. | 1 | INCLUDES ITEMS W/# |
| 070# | 1584104815 | COVER, BEARING CASE | 1 | |
| 080# | 1921599160 | SEAL, OIL | 1 | |
| 090 | 1584104823 | GASKET, CASE COVER | 1 | |
| 100 | 0102350622 | BOLT, SEMS | 8 | |
| 110 | 1269107044 | BEARING CASE, ASSY. | 1 | INCLUDES ITEMS W/% |
| 120% | 1584104540 | BOLT, BEARING CASE | 2 | |
| 130% | 1685104040 | CASE, MAIN BEARING ASSY. | 1 | |
| 140% | 1586123484 | METAL, CRANKSHAFT, STD/SET | 1 | |
| 140 | 1586123863 | METAL, CRANKSHAFT, -0.20MM/SET | 1 | |
| 140 | 1586123873 | METAL, CRANKSHAFT, -0.40MM/SET | 1 | |
| 150 | 1584104562 | BOLT, BEARING CASE | 1 | |

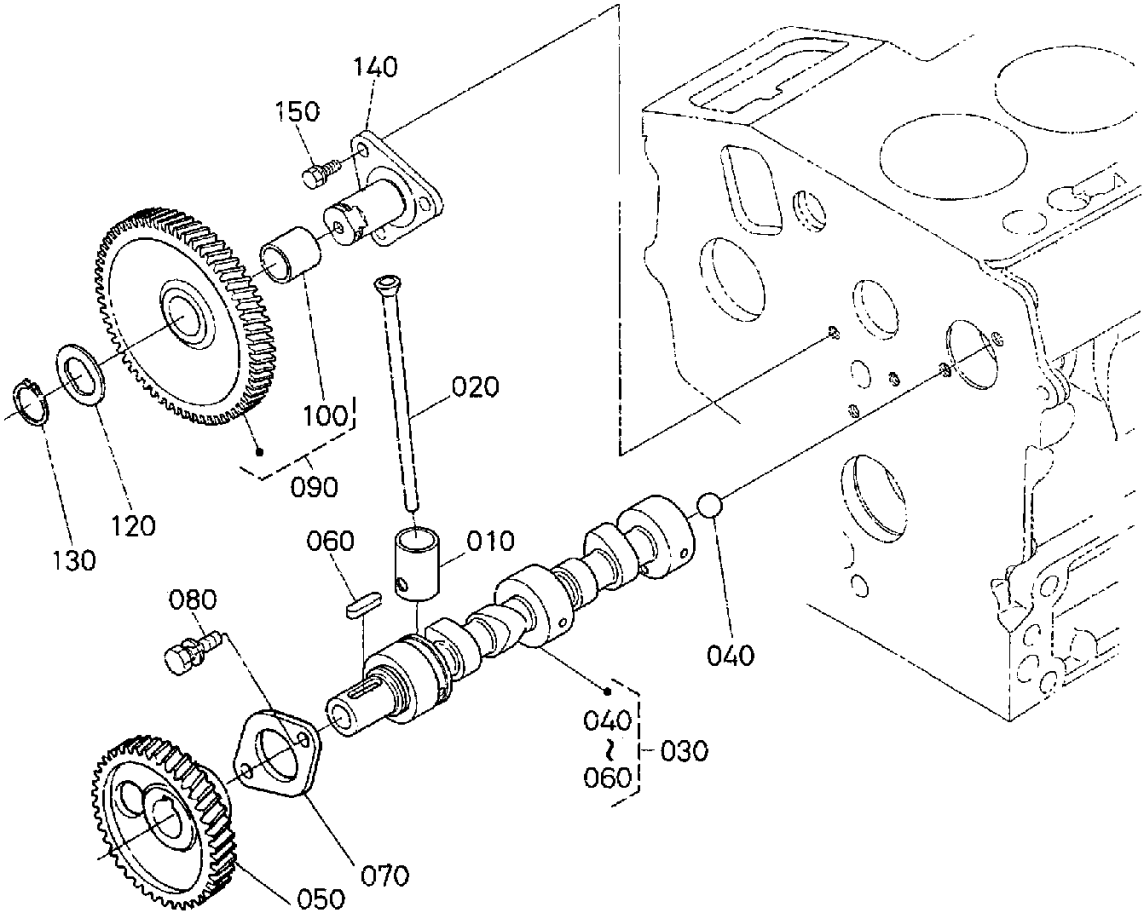
140
150
020
100
090
120
130
060
010
080
040
040
~
060
030
070
050

# KUBOTA Z482-E4B ENGINE — CAMSHAFT AND IDLE GEAR ASSY.

| NO. | PART NO. | PART NAME | QTY. | REMARKS |
|---|---|---|---|---|
| 010 | 1685115552 | TAPPET | 4 | |
| 020 | 1685115110 | PUSH ROD | 4 | |
| 030 | 1582116015 | CAMSHAFT ASSY. | 1 | S/N 4DMZ999 AND BELOW INCLUDES ITEMS W/# |
| 030 | 1582116018 | CAMSHAFT ASSY. | 1 | S/N 4DN0001 AND ABOVE INCLUDES ITEMS W/$ |
| 040#$ | 0771500401 | BALL 1/4 | 1 | |
| 050# | 1686416510 | GEAR, CAM | 1 | S/N 4DMZ999 AND BELOW |
| 050$ | 1J09416510 | GEAR, CAM | 1 | S/N 4DN0001 AND ABOVE |
| 060#$ | 0571200518 | KEY, FEATHER | 1 | |
| 070 | 1584116270 | STOPPER, CAMSHAFT | 1 | |
| 080 | 0102350612 | BOLT, SEMS | 2 | |
| 090 | 1587524015 | COMP. GEAR, IDLE | 1 | INCLUDES ITEMS W/% |
| 100% | 1587524284 | BUSH | 1 | |
| 120 | 1587524370 | COLLAR, IDLE GEAR | 1 | |
| 130 | 1587524320 | CIRCLIP, SHAFT IDLE GEAR | 1 | |
| 140 | 1587524250 | SHAFT, IDLE GEAR | 1 | |
| 150 | 0175450612 | BOLT, FLANGE | 3 | |

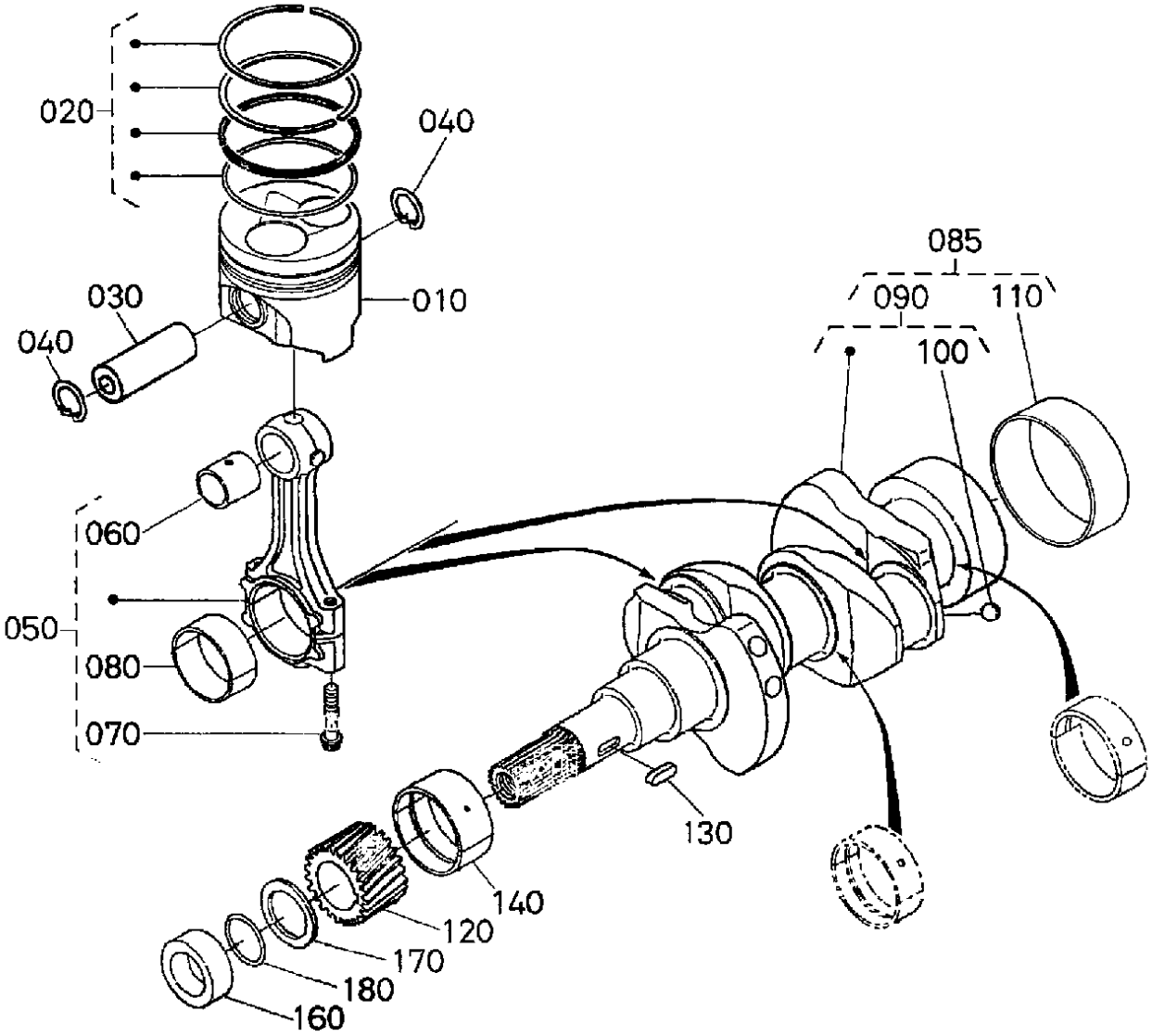
020
040
085
030
010
090
110
040
100
060
050
080
070
130
140
120
170
180
160

| NO. | PART NO. | PART NAME | QTY. | REMARKS |
|---|---|---|---|---|
| 010 | 1J09221110 | PISTON, STD | 2 | |
| 010 | 1J09221900 | PISTON, +0.25MM | 2 | |
| 020 | 1J09221050 | PISTON RING ASSY., STD | 2 | |
| 020 | 1J09221090 | PISTON RING ASSY., +0.25MM | 2 | |
| 030 | 1687121310 | PIN, PISTON | 2 | |
| 040 | 1526121330 | CIRCLIP, INTERNAL | 4 | |
| 050 | 1G68722010 | CONNECTING ROD ASSY. | 2 | INCLUDES ITEMS W/# |
| 060# | 1685121982 | BUSH, PISTON PIN | 2 | |
| 070# | 1685122140 | BOLT, CONNECTING ROD | 4 | |
| 080# | 1586122314 | METAL, CRANKPIN, STD/SET | 2 | |
| 080 | 1586122973 | METAL, CRANKPIN, -0.20MM/SET | 2 | |
| 080 | 1586122983 | METAL, CRANKPIN, -0.40MM/SET | 2 | |
| 085 | 1685323033 | CRANKSHAFT ASSY. | 1 | INCLUDES ITEMS W/$ |
| 090$ | 1685123013 | COMP. CRANKSHAFT | 1 | INCLUDES ITEMS W/% |
| 100$% | 0771503207 | BALL | 2 | |
| 110$ | 1921523280 | SLEEVE, CRANKSHAFT | 1 | |
| 120 | 1584124110 | GEAR, CRANK | 1 | |
| 130 | 0571200515 | KEY, FEATHER | 1 | |
| 140 | 1586123474 | METAL CRANKSHAFT, STD | 1 | |
| 140 | 1586123913 | METAL CRANKSHAFT, -0.20MM | 1 | |
| 140 | 1586123923 | METAL CRANKSHAFT, -0.40MM | 1 | |
| 160 | 1584123250 | COLLAR, CRANKSHAFT | 1 | |
| 170 | 1588123310 | SLINGER OIL, CRANKSHAFT | 1 | |
| 180 | 0481416220 | O-RING | 1 | |

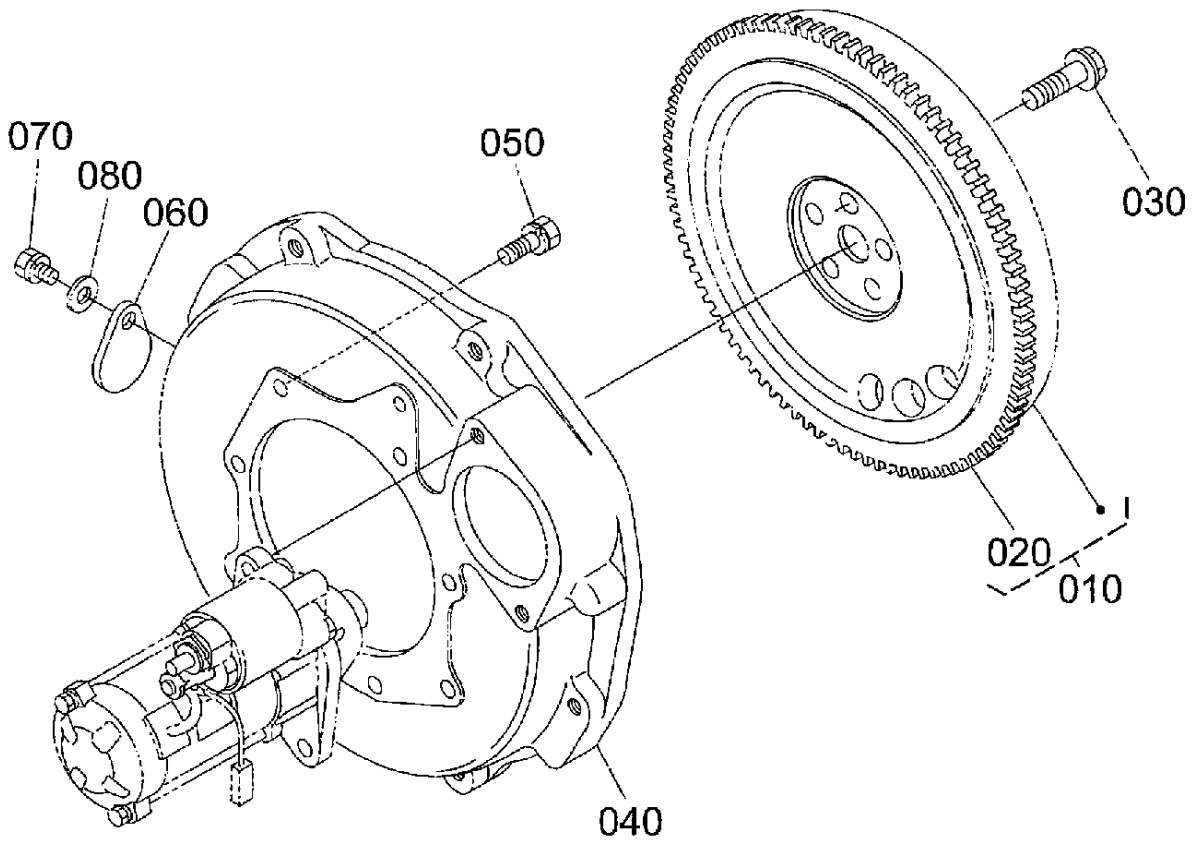
070
080
060
050
030
020
010
040

# KUBOTA Z482-E4B ENGINE — FLYWHEEL ASSY.

| NO. | PART NO. | PART NAME | QTY. | REMARKS |
|---|---|---|---|---|
| 010 | 1685125022 | COMP. FLYWHEEL | 1 | INCLUDES ITEMS W/# |
| 020# | 1687163822 | GEAR, RING | 1 | |
| 030 | 1585225160 | BOLT, FLYWHEEL | 5 | |
| 040 | 1584704612 | HOUSING, FLYWHEEL | 1 | |
| 050 | 0112350820 | BOLT, SEMS | 8 | |
| 060 | 3122014170 | COVER | 1 | |
| 070 | 0112350814 | BOLT, SEMS | 1 | |
| 080 | 0401350080 | WASHER, FLAT | 1 | |

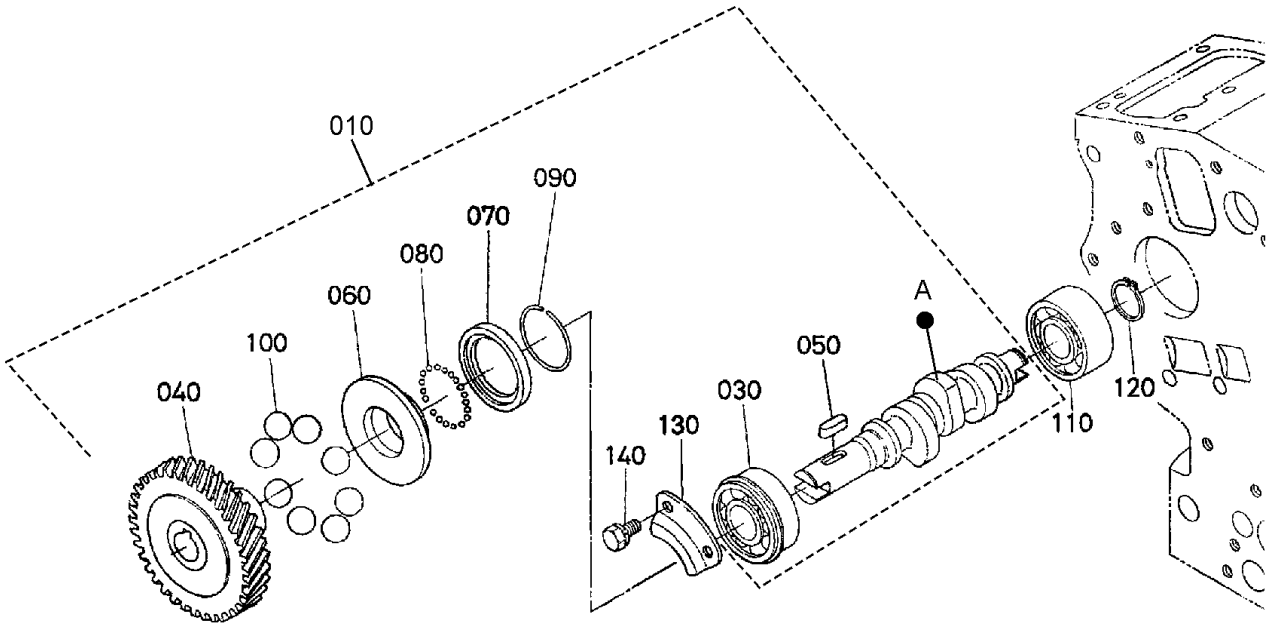
010
090
070
080
060
100
040
A
050
030
130
140
110
120

# KUBOTA Z482-E4B ENGINE — FUEL CAMSHAFT AND GOV. SHAFT ASSY.

| NO. | PART NO. | PART NAME | QTY. | REMARKS |
|---|---|---|---|---|
| 010 | 1G46016020 | CAMSHAFT, FUEL ASSY. | 1 | INCLUDES ITEMS W/$ |
| 030$ | 0815306203 | BEARING, BALL | 1 | |
| 040$ | 1685151150 | GEAR, INJECTION PUMP | 1 | |
| 050$ | 0571200515 | KEY, FEATHER | 1 | |
| 060$ | 1584155452 | SLEEVE, GOVERNOR | 1 | |
| 070$ | 1584155692 | CASE, GOVERNOR BALL | 1 | |
| 080$ | 0771500801 | BALL | 32 | |
| 090$ | 1526155470 | CIRCLIP, GOVERNOR SLEEVE | 1 | |
| 100$ | 0771503217 | BALL | 8 | |
| 110 | 1687197300 | BEARING, BALL | 1 | |
| 120 | 0461200170 | CIR-CLIP, EXTERNAL | 1 | |
| 130 | 1584116320 | STOPPER, FUEL CAMSHAFT | 1 | |
| 140 | 0102350612 | BOLT, SEMS | 2 | |

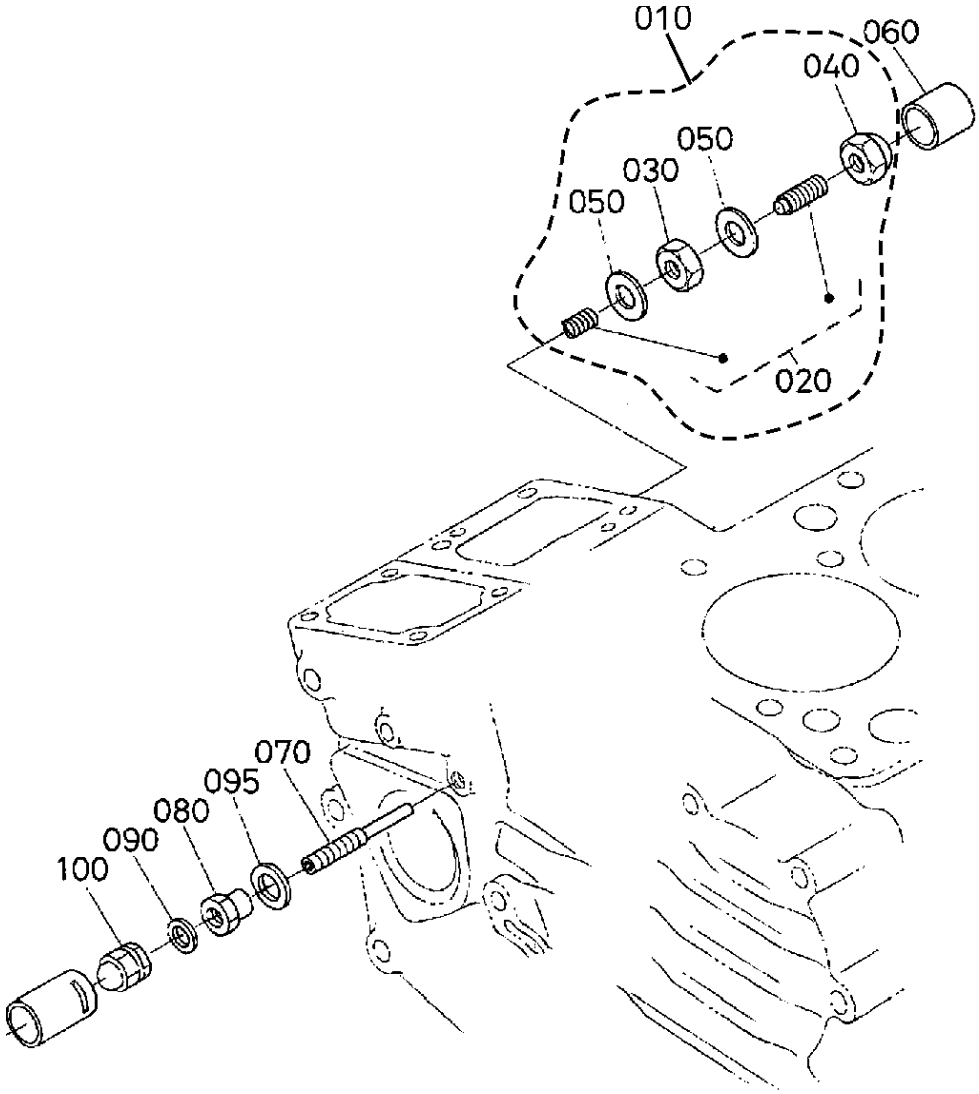
010
060
040
050
030
050
020
070
095
080
090
100

# KUBOTA Z482-E4B ENGINE — IDLE APPARATUS ASSY.

| NO. | PART NO. | PART NAME | QTY. | REMARKS |
|---|---|---|---|---|
| 010 | 1584154092 | IDLE APPARATUS ASSY. | 1 | INCLUDES ITEMS W/# |
| 020# | 1584154100 | BOLT, ADJUSTMENT ASSY. | 1 | INCLUDES ITEMS W/$ |
| 030#$ | 1526192020 | NUT | 1 | |
| 040# | 1584154220 | NUT, CAP | 1 | |
| 050#$ | 1502133660 | GASKET | 2 | |
| 060 | 1584154270 | CAP | 1 | |
| 070 | 1584154123 | BOLT, ADJUSTING | 1 | |
| 080 | 1G03154210 | NUT, LOCK | 1 | |
| 090 | 1560196650 | GASKET | 1 | |
| 095 | 1G02196650 | GASKET | 1 | |
| 100 | 1584192330 | NUT, CAP | 1 | |

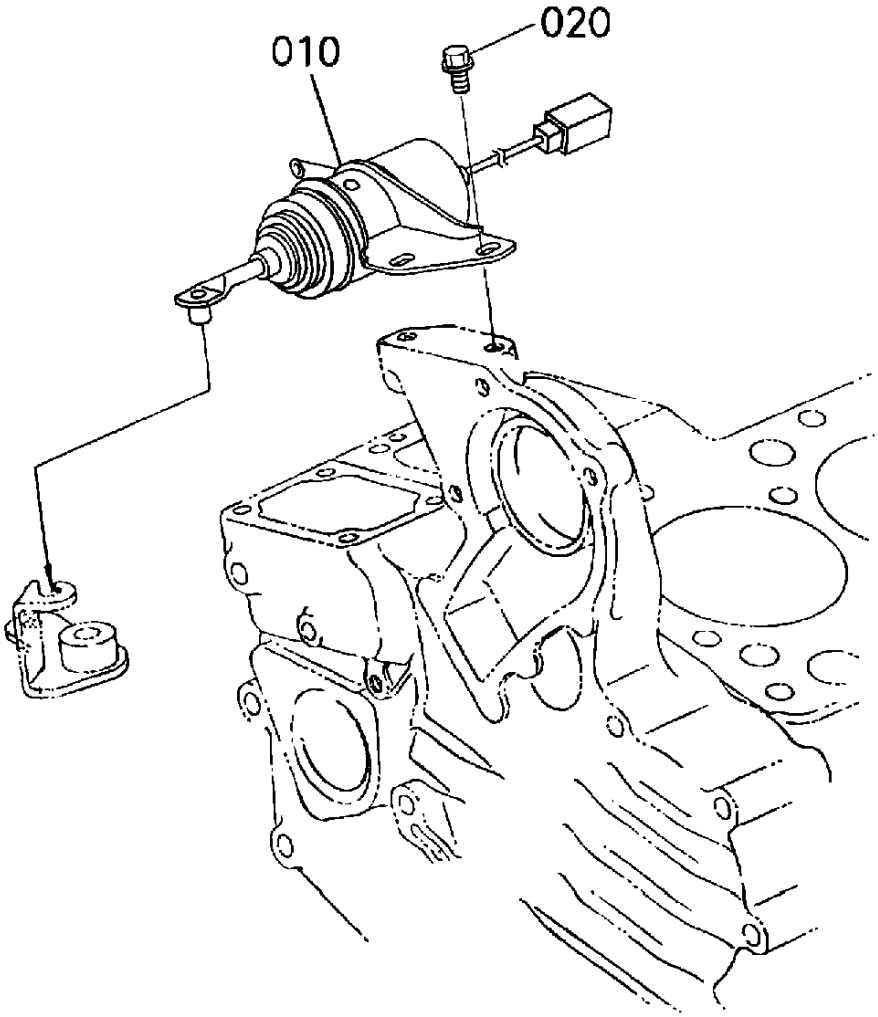
010
020

# KUBOTA Z482-E4B ENGINE — STOP SOLENOID ASSY.

| NO. | PART NO. | PART NAME | QTY. | REMARKS |
|---|---|---|---|---|
| 010 | 1685160014 | SOLENOID, STOP | 1 | |
| 020 | 0175450612 | BOLT, FLANGE | 2 | |

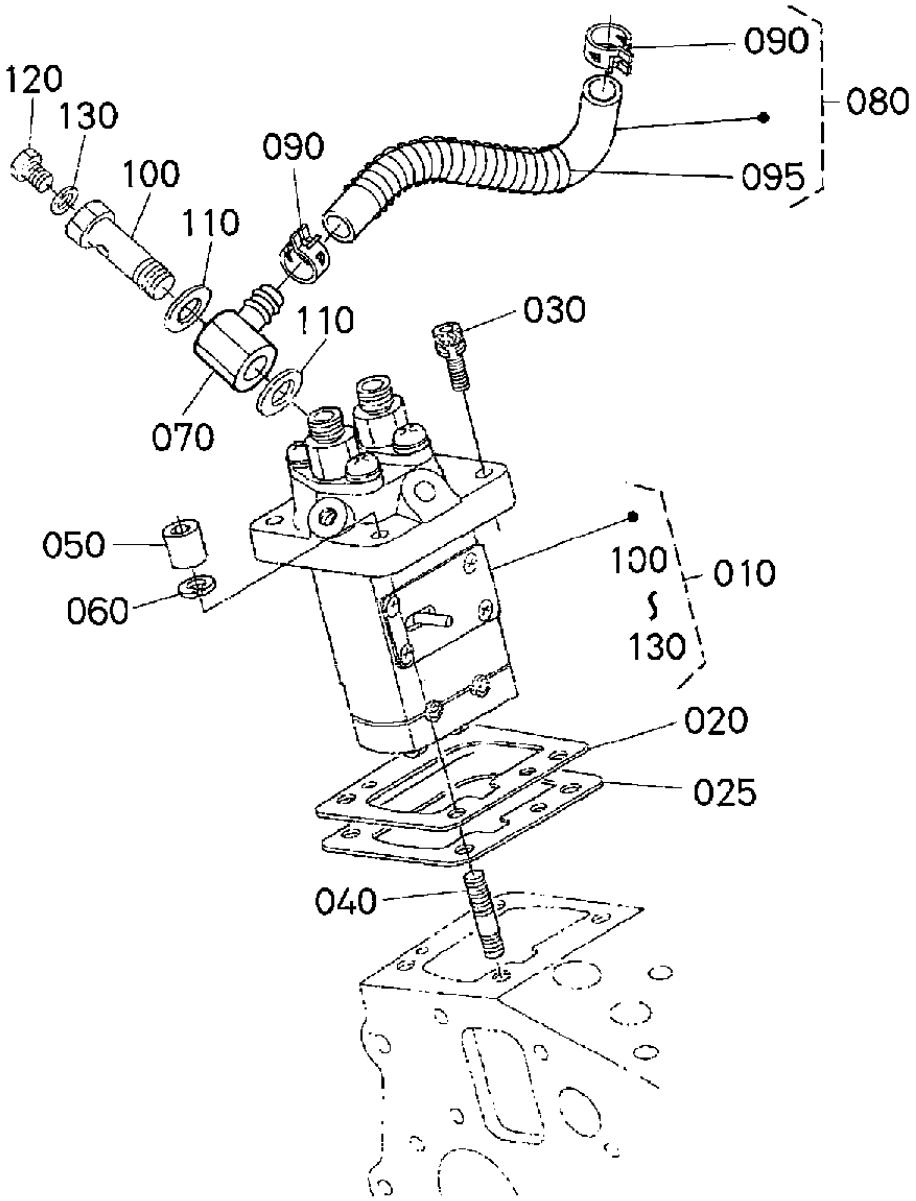
090
080
095
120
130
100
090
110
110
030
070
050
060
100
010
130
020
025
040

# KUBOTA Z482-E4B ENGINE — INJECTION PUMP ASSY.

| NO. | PART NO. | PART NAME | QTY. | REMARKS |
|---|---|---|---|---|
| 010 | 1754851014 | PUMP ASSY., INJECTION | 1 | INCLUDES ITEMS W/# |
| 020 | 1G68952200 | SHIM, INJECTION PUMP, 0.175MM | 1 | |
| 020 | 1600152090 | SHIM, INJECTION PUMP, 0.200MM | 1 | |
| 020 | 1600152110 | SHIM, INJECTION PUMP, 0.250MM | 1 | |
| 025 | 1600152120 | SHIM, INJECTION PUMP, 0.300MM | 1 | |
| 025 | 1G68952160 | SHIM, INJECTION PUMP, 0.350MM | 1 | |
| 030 | 1687191060 | SCREW, HEX SOCKET HEAD CAP | 3 | |
| 040 | 1584191500 | STUD | 1 | |
| 050 | 1584192320 | NUT, CAP | 1 | |
| 060 | 0451250060 | WASHER, SPRING LOCK | 1 | |
| 070 | 1584195680 | JOINT | 1 | |
| 080 | 1526342010 | PIPE, FUEL ASSY. | 1 | INCLUDES ITEMS W/$ |
| 090$ | 1491142750 | CLIP, PIPE | 2 | |
| 095$ | 6659154250 | SPRING, PIPE PROTECT | 1 | |
| 100# | 1584151320 | SCREW, ROOF CANOPY | 1 | |
| 110# | 1584196650 | GASKET | 2 | |
| 120# | 1584151350 | SCREW, AIR BLEEDER | 1 | |
| 130# | 1584196660 | GASKET | 1 | |

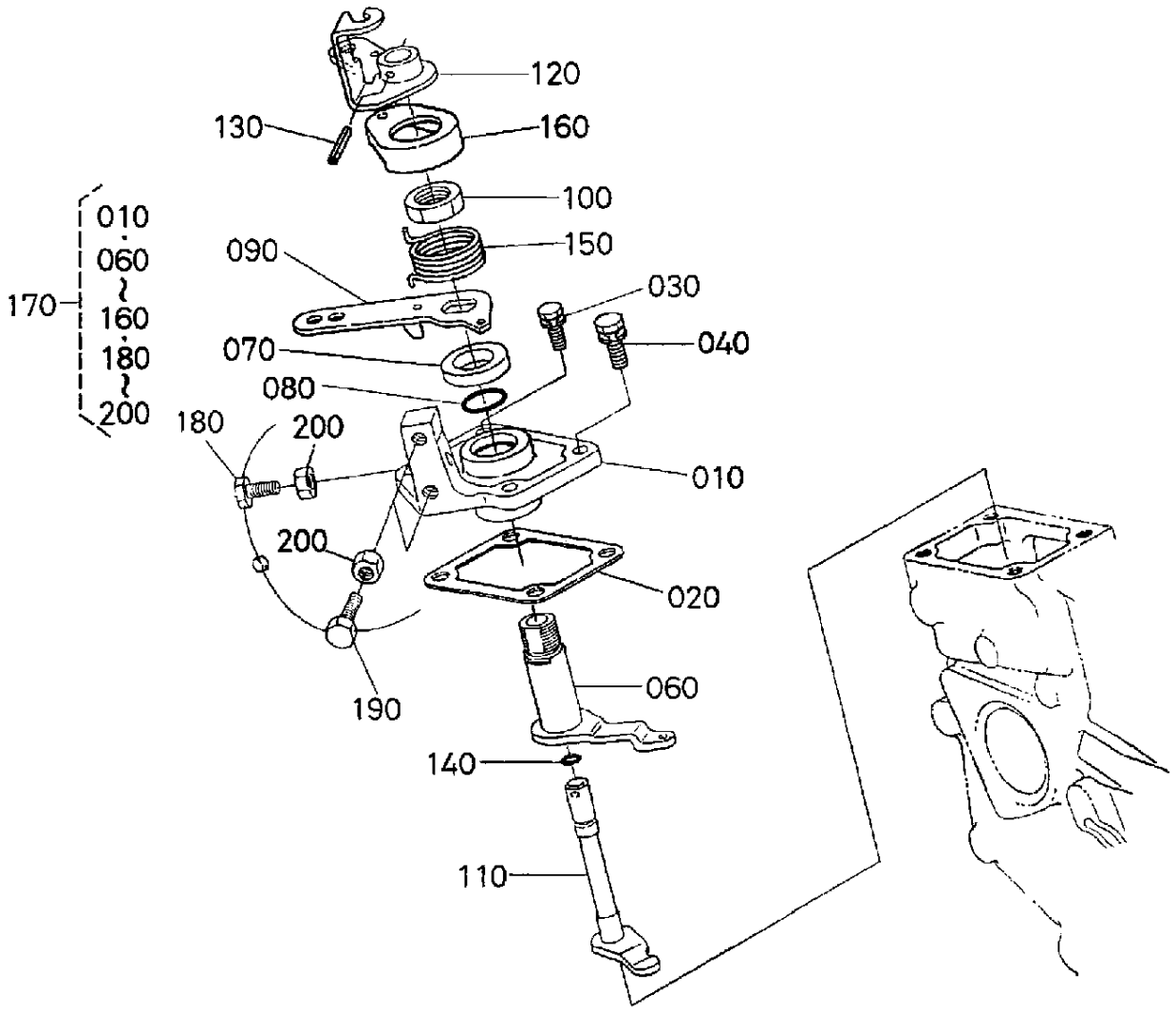
120
130
160
100
150
090
030
040
070
080
010
020
060
140
110
170
010
060
160
180
200
180
200
200
190

# KUBOTA Z482-E4B ENGINE — SPEED CONTROL PLATE ASSY.

| NO. | PART NO. | PART NAME | QTY. | REMARKS |
|---|---|---|---|---|
| 010$ | 1584157112 | PLATE, SPEED CONTROL | 1 | |
| 020 | 1584157212 | GASKET, CONTROL PLATE | 1 | |
| 030 | 0175450616 | BOLT, FLANGE | 2 | |
| 040 | 1687191050 | BOLT | 2 | |
| 060$ | 1584156112 | LEVER, GOVERNOR | 1 | |
| 070$ | 1928057240 | COLLAR | 1 | |
| 080$ | 0481410160 | O-RING | 1 | |
| 090$ | 1G63957150 | LEVER, SPEED CONTROL | 1 | |
| 100$ | 1686692010 | NUT, SPEED CONTROL | 2 | |
| 110$ | 1687857742 | SHAFT, LEVER | 1 | |
| 120$ | 1685157724 | LEVER, ENGINE STOP | 1 | |
| 130$ | 0541100314 | PIN, SPRING | 1 | |
| 140$ | 0481410070 | O-RING | 1 | |
| 150$ | 1687857920 | SPRING, RETURN | 1 | |
| 160$ | 1686657302 | CAP | 1 | |
| 170 | 1756157013 | COMP. PLATE, SPEED CONTROL | 1 | INCLUDES ITEMS W/$ |
| 180$ | 1920291010 | BOLT | 1 | |
| 190$ | 1920291010 | BOLT | 2 | |
| 200$ | 0205650060 | HEX, NUT | 3 | |

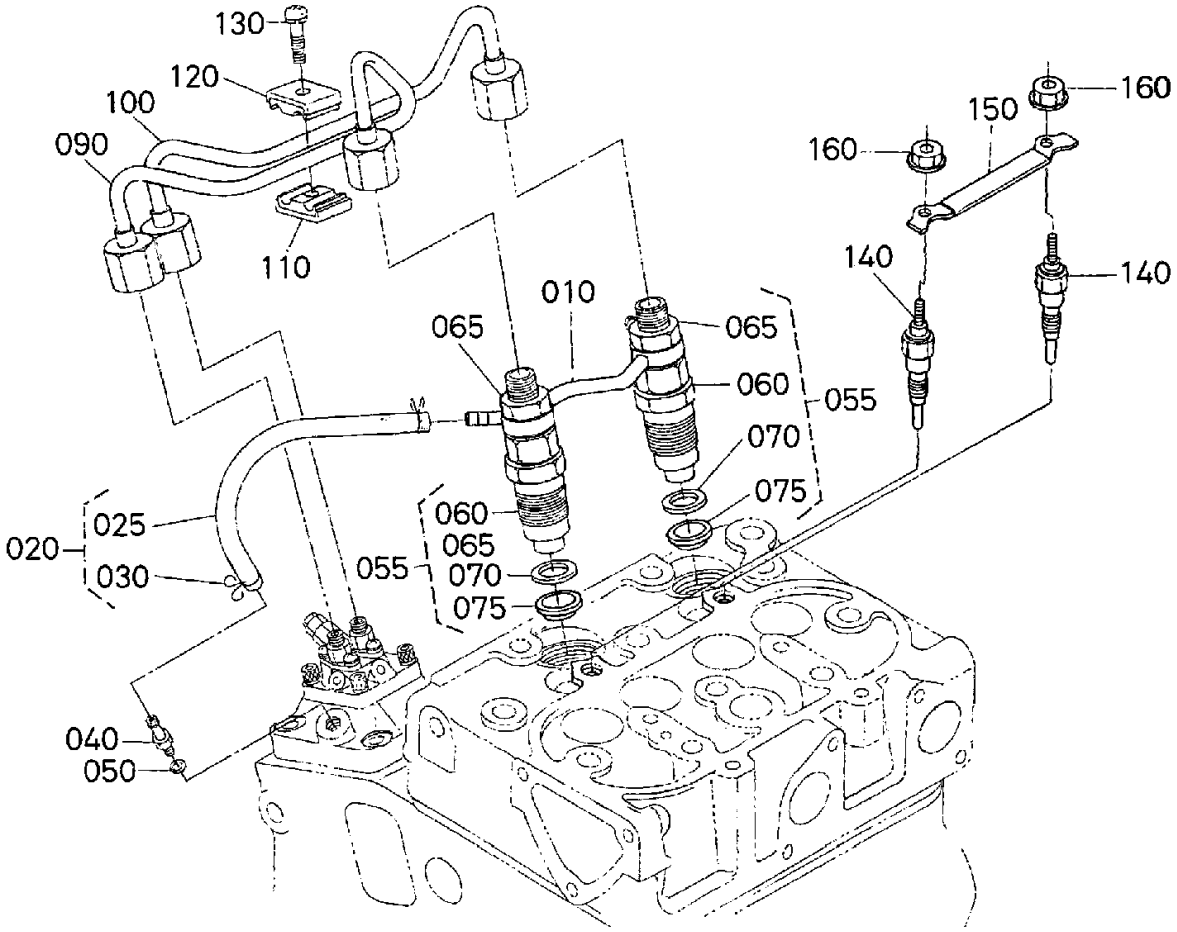
130
120
100
090
110
160
150
160
140
140
010
065
065
060
055
070
075
060
065
055
070
075
025
020
030
040
050

# KUBOTA Z482-E4B ENGINE — NOZZLE HOLDER AND GLOW PLUG ASSY.

| NO. | PART NO. | PART NAME | QTY. | REMARKS |
|---|---|---|---|---|
| 010 | 1585242502 | PIPE ASSY., OVER FLOW | 1 | |
| 020 | 1584142500 | PIPE ASSY., OVER FLOW | 1 | INCLUDES ITEMS W/# |
| 025# | 1584142520 | PIPE, FUEL OVER FLOW | 1 | |
| 030# | 1497142750 | CLIP, PIPE | 2 | |
| 040 | 1584151360 | SCREW, AIR BLEEDER | 1 | |
| 050 | 1560196650 | GASKET | 1 | |
| 055 | 1687153904 | HOLDER, NOZZLE KIT | 2 | INCLUDES ITEMS W/$ |
| 060$ | 1687153002 | HOLDER, NOZZLE ASSY. | 2 | |
| 065$ | 1G82692032 | NUT | 2 | |
| 070$ | 1584153622 | GASKET | 2 | |
| 075$ | 1907753650 | SEAL, HEAT | 2 | |
| 090 | 1G68653710 | PIPE, INJECTION | 1 | |
| 100 | 1G68653720 | PIPE, INJECTION | 1 | |
| 110 | 1584153850 | CLAMP, PIPE | 1 | |
| 120 | 1584153860 | CLAMP, PIPE | 1 | |
| 130 | 0302450520 | SCREW, SEMS PAN HEAD | 1 | |
| 140 | 1G67965512 | PLUG, GLOW | 2 | |
| 150 | 1685165560 | CORD, GLOW PLUG | 1 | |
| 160 | 0276150040 | NUT, FLANGE | 2 | |

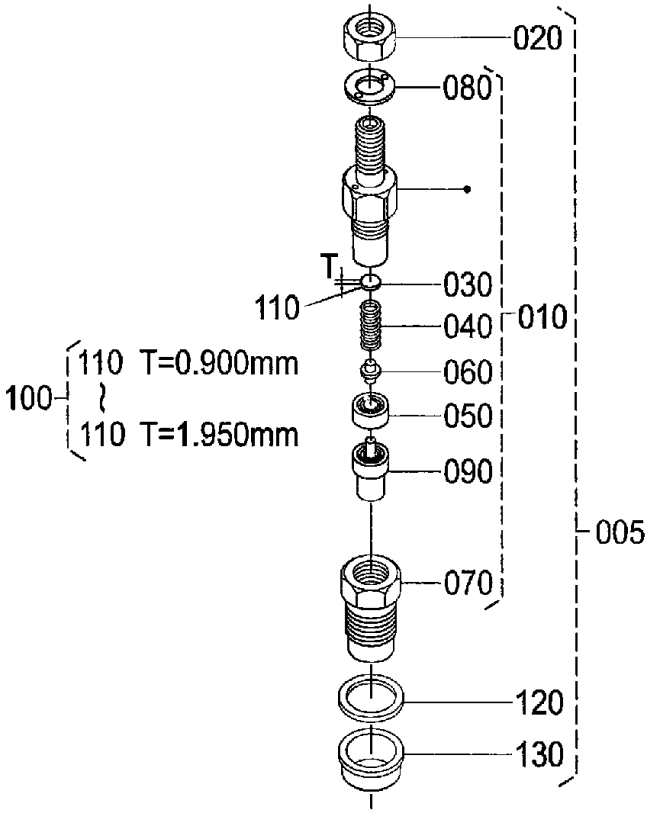
020
080
T
030
110
040
010
110 T=0.900mm
100
060
110 T=1.950mm
050
090
005
070
120
130

# KUBOTA Z482-E4B ENGINE — NOZZLE HOLDER COMP. ASSY.

| NO. | PART NO. | PART NAME | QTY. | REMARKS |
|---|---|---|---|---|
| 005 | 1687153904 | HOLDER, NOZZLE KIT | 2 | INCLUDES ITEMS W/# |
| 010# | 1687153002 | HOLDER, NOZZLE ASSY. | 2 | INCLUDES ITEMS W/$ |
| 020# | 1G82692032 | NUT | 2 | |
| 030#$ | 1603253230 | WASHER, ADJUSTING | 2 | |
| 040#$ | 1603253170 | SPRING, NOZZLE | 2 | |
| 050#$ | 1603253350 | SPACER, DISTANCE | 2 | |
| 060#$ | 1603253160 | ROD, PUSH | 2 | |
| 070#$ | 1687153280 | NUT, NOZZLE | 2 | |
| 080#$ | 1603294040 | WASHER, FLAT | 2 | |
| 090#$ | 1G96253610 | NOZZLE-PIECE | 2 | |
| 100 | 1584198100 | WASHER, ADJUSTING ASSY. | 2 | INCLUDES ITEMS W/% |
| 110% | 1584153230 | WASHER, ADJUSTING | 2 | 0.900MM |
| 110% | 1584198510 | WASHER, ADJUSTING | 2 | 0.925MM |
| 110% | 1584198520 | WASHER, ADJUSTING | 2 | 0.950MM |
| 110% | 1584198530 | WASHER, ADJUSTING | 2 | 0.975MM |
| 110% | 1584198540 | WASHER, ADJUSTING | 2 | 1.000MM |
| 110% | 1584198550 | WASHER, ADJUSTING | 2 | 1.025MM |
| 110% | 1584198560 | WASHER, ADJUSTING | 2 | 1.050MM |
| 110% | 1584198570 | WASHER, ADJUSTING | 2 | 1.075MM |
| 110% | 1584198580 | WASHER, ADJUSTING | 2 | 1.100MM |
| 110% | 1584198590 | WASHER, ADJUSTING | 2 | 1.125MM |
| 110% | 1584198600 | WASHER, ADJUSTING | 2 | 1.150MM |
| 110% | 1584198610 | WASHER, ADJUSTING | 2 | 1.175MM |
| 110% | 1584198620 | WASHER, ADJUSTING | 2 | 1.200MM |
| 110% | 1584198630 | WASHER, ADJUSTING | 2 | 1.225MM |
| 110% | 1584198640 | WASHER, ADJUSTING | 2 | 1.250MM |
| 110% | 1584198650 | WASHER, ADJUSTING | 2 | 1.275MM |
| 110% | 1584198660 | WASHER, ADJUSTING | 2 | 1.300MM |
| 110% | 1584198670 | WASHER, ADJUSTING | 2 | 1.325MM |
| 110% | 1584198680 | WASHER, ADJUSTING | 2 | 1.350MM |
| 110% | 1584198690 | WASHER, ADJUSTING | 2 | 1.375MM |
| 110% | 1584198700 | WASHER, ADJUSTING | 2 | 1.400MM |
| 110% | 1584198710 | WASHER, ADJUSTING | 2 | 1.425MM |
| 110% | 1584198720 | WASHER, ADJUSTING | 2 | 1.450MM |
| 110% | 1584198730 | WASHER, ADJUSTING | 2 | 1.475MM |
| 110% | 1584198740 | WASHER, ADJUSTING | 2 | 1.500MM |
| 110% | 1584198750 | WASHER, ADJUSTING | 2 | 1.525MM |

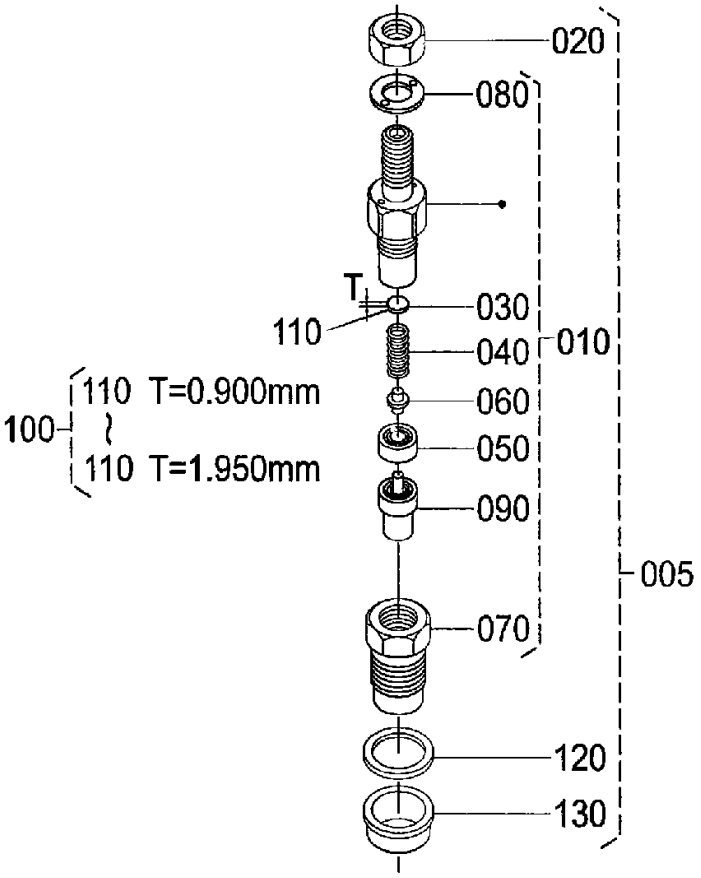
020
080
T
030
110
040
010
110 T=0.900mm
100
060
050
110 T=1.950mm
090
005
070
120
130

| NO. | PART NO. | PART NAME | QTY. | REMARKS |
|---|---|---|---|---|
| 110% | 1584198760 | WASHER, ADJUSTING | 2 | 1.550MM |
| 110% | 1584198770 | WASHER, ADJUSTING | 2 | 1.575MM |
| 110% | 1584198780 | WASHER, ADJUSTING | 2 | 1.600MM |
| 110% | 1584198790 | WASHER, ADJUSTING | 2 | 1.625MM |
| 110% | 1584198800 | WASHER, ADJUSTING | 2 | 1.650MM |
| 110% | 1584198810 | WASHER, ADJUSTING | 2 | 1.675MM |
| 110% | 1584198820 | WASHER, ADJUSTING | 2 | 1.700MM |
| 110% | 1584198830 | WASHER, ADJUSTING | 2 | 1.725MM |
| 110% | 1584198840 | WASHER, ADJUSTING | 2 | 1.750MM |
| 110% | 1584198850 | WASHER, ADJUSTING | 2 | 1.775MM |
| 110% | 1584198860 | WASHER, ADJUSTING | 2 | 1.800MM |
| 110% | 1584198870 | WASHER, ADJUSTING | 2 | 1.825MM |
| 110% | 1584198880 | WASHER, ADJUSTING | 2 | 1.850MM |
| 110% | 1584198890 | WASHER, ADJUSTING | 2 | 1.875MM |
| 110% | 1584198900 | WASHER, ADJUSTING | 2 | 1.900MM |
| 110% | 1584198910 | WASHER, ADJUSTING | 2 | 1.925MM |
| 110% | 1584198920 | WASHER, ADJUSTING | 2 | 1.950MM |
| 120# | 1584153622 | GASKET | 2 | |
| 130# | 1907753650 | SEAL, HEAT | 2 | |

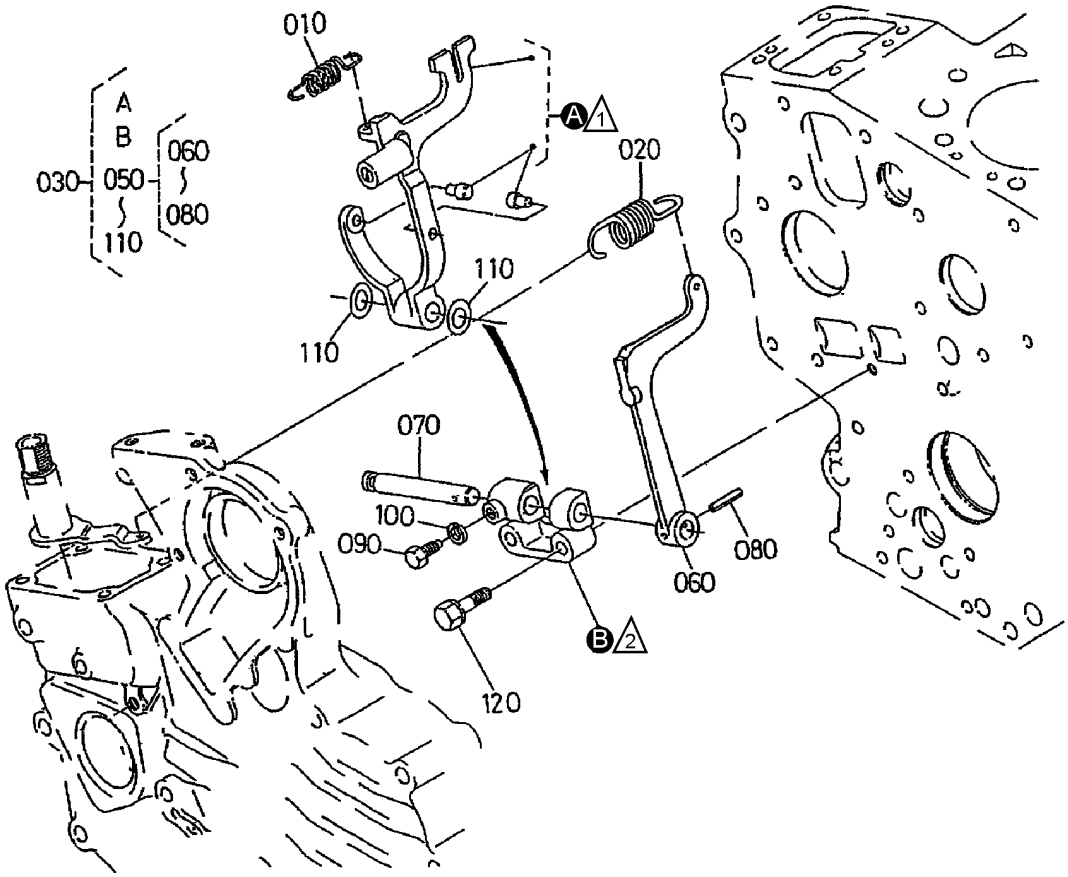


NOTES

1 FORK LEVER ITEM A NOT SOLD SEPARATELY.

2 HOLDER, FORK LEVER ITEM B NOT SOLD SEPARATELY.

# KUBOTA Z482-E4B ENGINE — FORK LEVER GOV. ASSY.

| NO. | PART NO. | PART NAME | QTY. | REMARKS |
|---|---|---|---|---|
| 010 | 1584156480 | SPRING, START | 1 | |
| 020 | 1754956410 | SPRING, GOVERNOR | 1 | |
| 030 | 1754856055 | LEVER, FORK ASSY. | 1 | INCLUDES ITEMS W/# |
| A# | | LEVER, FORK COMP | 1 | NOT SOLD SEPARATELY |
| B# | | HOLDER, FORK LEVER | 1 | NOT SOLD SEPARATELY |
| 050# | 1584156060 | LEVER, FORK ASSY. | 1 | INCLUDES ITEMS W/$ |
| 060#$ | 1584156130 | LEVER, FORK | 1 | |
| 070#$ | 1584156150 | SHAFT, FORK LEVER | 1 | |
| 080#$ | 0541100318 | PIN, SPRING | 1 | |
| 090# | 1526166410 | BOLT | 1 | |
| 100# | 0451250050 | WASHER, SPRING LOCK | 1 | |
| 110# | 1666255620 | WASHER, FLAT | 2 | |
| 120 | 0102350635 | BOLT, SEMS | 2 | |

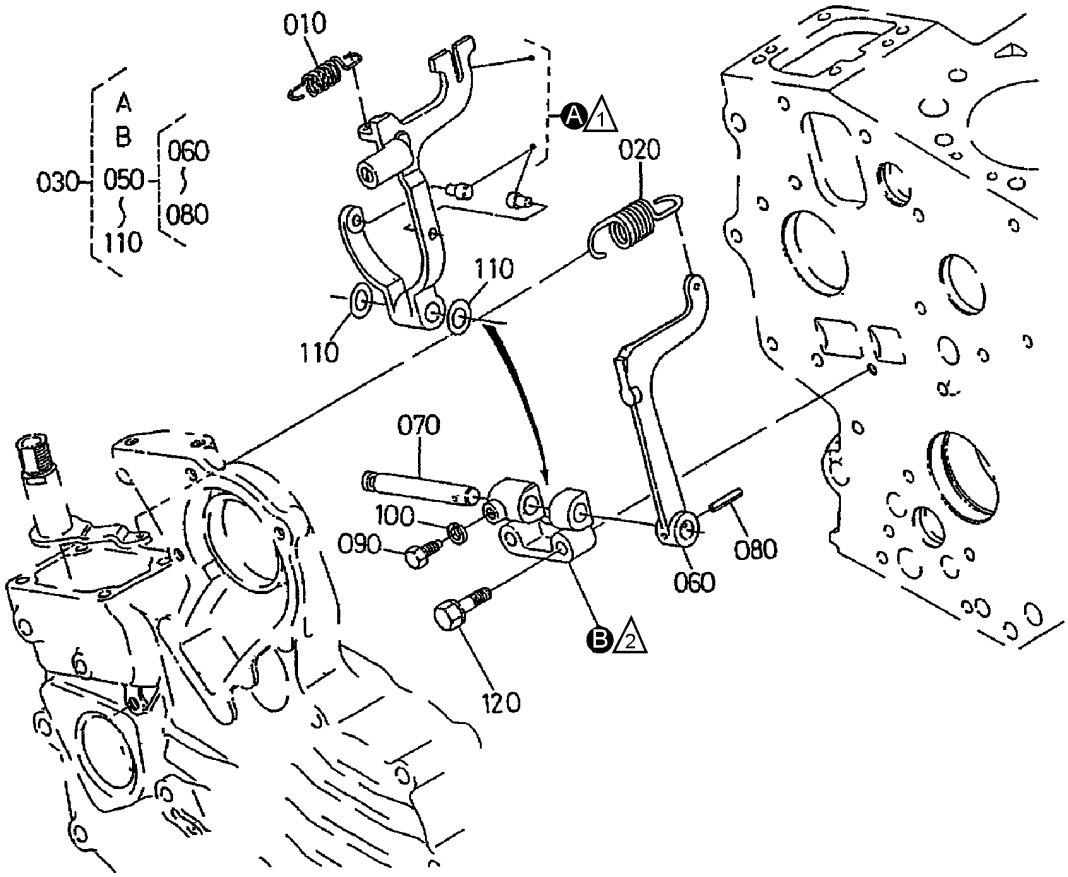


NOTES

1 FORK LEVER ITEM A NOT SOLD SEPARATELY.

2 HOLDER, FORK LEVER ITEM B NOT SOLD SEPARATELY.

# KUBOTA Z482-E4B ENGINE — FORK LEVER GOV. ASSY.

| NO. | PART NO. | PART NAME | QTY. | REMARKS |
|---|---|---|---|---|
| 010 | 1584156480 | SPRING, START | 1 | |
| 020 | 1754956410 | SPRING, GOVERNOR | 1 | |
| 030 | 1754856055 | LEVER, FORK ASSY. | 1 | INCLUDES ITEMS W/# |
| A# | | LEVER, FORK COMP | 1 | NOT SOLD SEPARATELY |
| B# | | HOLDER, FORK LEVER | 1 | NOT SOLD SEPARATELY |
| 050# | 1584156060 | LEVER, FORK ASSY. | 1 | INCLUDES ITEMS W/$ |
| 060#$ | 1584156130 | LEVER, FORK | 1 | |
| 070#$ | 1584156150 | SHAFT, FORK LEVER | 1 | |
| 080#$ | 0541100318 | PIN, SPRING | 1 | |
| 090# | 1526166410 | BOLT | 1 | |
| 100# | 0451250050 | WASHER, SPRING LOCK | 1 | |
| 110# | 1666255620 | WASHER, FLAT | 2 | |
| 120 | 0102350635 | BOLT, SEMS | 2 | |

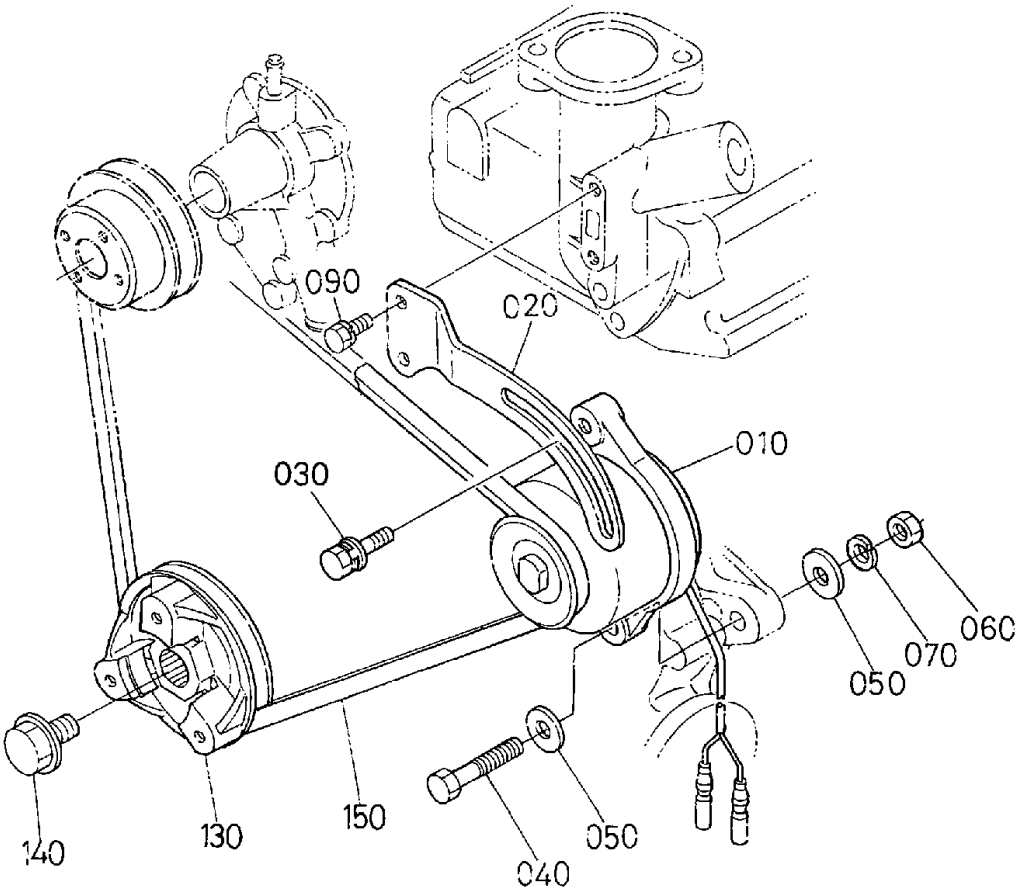
090
020
010
030
060
070
050
140
130
150
050
040

# KUBOTA Z482-E4B ENGINE — DYNAMO AND PULLEY ASSY.

| NO. | PART NO. | PART NAME | QTY. | REMARKS |
|---|---|---|---|---|
| 010 | 1753164012 | DYNAMO ASSY. | 1 | |
| 020 | 1259964420 | STAY, DYNAMO | 1 | |
| 030 | 1687191030 | BOLT | 1 | |
| 040 | 0115350855 | HEX, BOLT | 1 | |
| 050 | 0401350080 | WASHER, FLAT | 2 | |
| 060 | 0215650080 | HEX, NUT | 1 | |
| 070 | 0451250080 | WASHER, SPRING LOCK | 1 | |
| 090 | 0102350616 | BOLT, SEMS | 2 | |
| 130 | 1685174280 | PULLEY, FAN DRIVE | 1 | |
| 140 | 1588191030 | BOLT | 1 | |
| 150 | 1980572530 | BELT, FAN | 1 | |

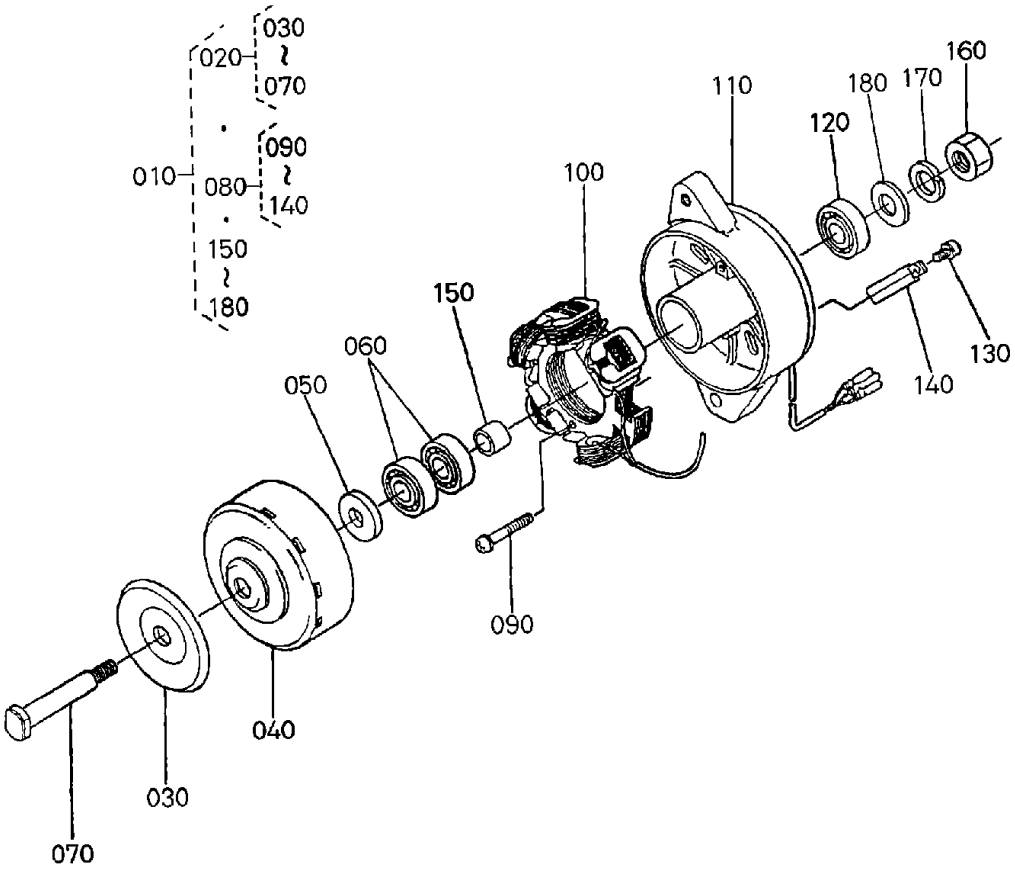
010
020
030
070
080
090
140
150
180
100
110
120
130
140
150
160
170
180
050
060
040
030
070
090

# KUBOTA Z482-E4B ENGINE — DYNAMO COMPONENTS ASSY.

| NO. | PART NO. | PART NAME | QTY. | REMARKS |
|---|---|---|---|---|
| 010 | 1753164012 | DYNAMO ASSY. | 1 | INCLUDES ITEMS W/# |
| 020# | 1553264120 | COMP. FLYWHEEL | 1 | INCLUDES ITEMS W/$ |
| 030#$ | 1553164110 | PULLEY | 1 | |
| 040#$ | 1553264040 | FLYWHEEL | 1 | |
| 050#$ | 6C04082860 | COLLAR | 1 | |
| 060#$ | 1553174180 | BEARING, BALL | 2 | |
| 070#$ | 1553274140 | SHAFT, FAN | 1 | |
| 080# | 1553264360 | COMP. STATOR | 1 | INCLUDES ITEMS W/% |
| 090#% | 1526193010 | SCREW, ROUND HEAD | 2 | |
| 100#% | 1553164292 | STATOR | 1 | |
| 110#% | 1553264070 | PLATE | 1 | |
| 120#% | 1553174180 | BEARING, BALL | 1 | |
| 130#% | 1553193010 | SCREW, ROUND HEAD | 1 | |
| 140#% | 1526164190 | CLAMP, CORD | 1 | |
| 150# | 1526164150 | COLLAR | 1 | |
| 160# | 1526192030 | NUT | 1 | |
| 170# | 1526194070 | WASHER, LOCK | 1 | |
| 180# | 1526194020 | WASHER, FLAT | 1 | |

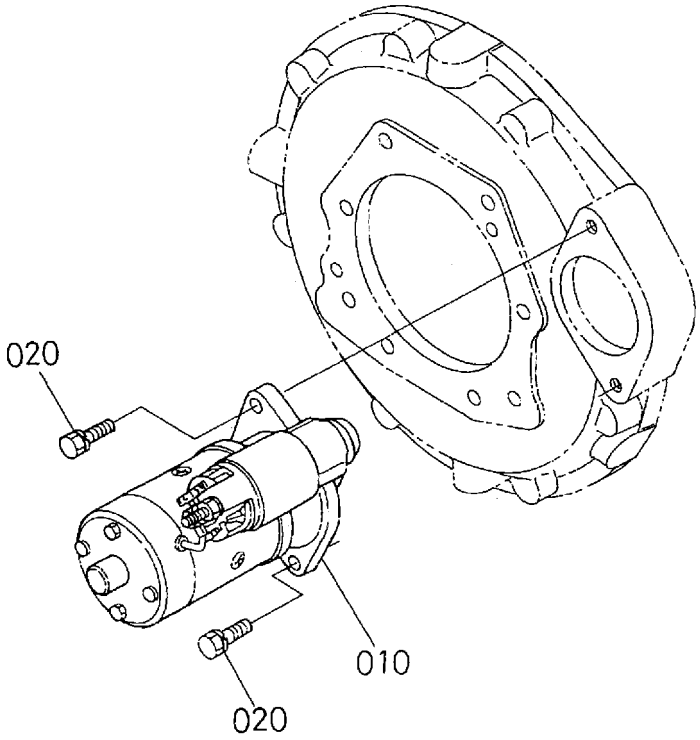
020
010
020

# KUBOTA Z482-E4B ENGINE — STARTER ASSY.

| NO. | PART NO. | PART NAME | QTY. | REMARKS |
|---|---|---|---|---|
| 010 | 1983763014 | STARTER ASSY. | 1 | |
| 020 | 0112350825 | BOLT, SEMS | 2 | |

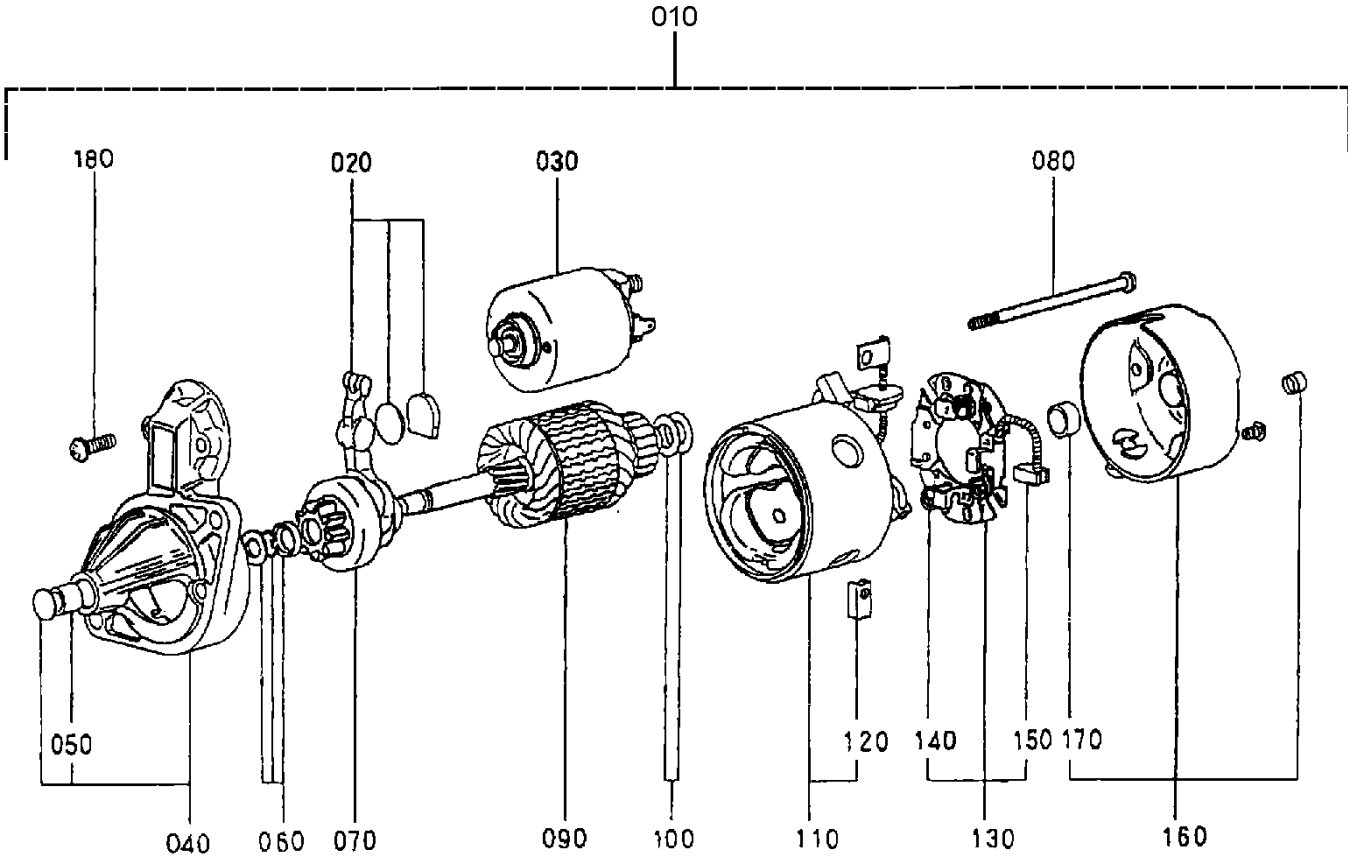
010
180
020
030
080
050
040
060
070
090
100
110
120
140
150
170
130
160

# KUBOTA Z482-E4B ENGINE — STARTER COMPONENTS ASSY.

| NO. | PART NO. | PART NAME | QTY. | REMARKS |
|---|---|---|---|---|
| 010 | 1983763014 | STARTER ASSY. | 1 | INCLUDES ITEMS W/# |
| 020# | 1983763050 | LEVER, DRIVE | 1 | |
| 030# | 1585263023 | SWITCH, MAGNETIC | 1 | |
| 040# | 1983763030 | FRAME, DRIVE END | 1 | INCLUDES ITEMS W/$ |
| 050#$ | 1585263240 | BUSHING | 1 | |
| 060# | 1983763150 | STOPPER | 1 | |
| 070# | 1983763040 | CLUTCH, OVER RUNNING | 1 | |
| 080# | 1983763320 | BOLT | 2 | |
| 090# | 1983763070 | ARMATURE | 1 | |
| 100# | 1585263410 | WASHER, ADJUSTING | 1 | |
| 110# | 1983763082 | YOKE | 1 | INCLUDES ITEMS W/% |
| 120#% | 1585263360 | BRUSH | 2 | |
| 130# | 1585263380 | HOLDER, BRUSH | 1 | INCLUDES ITEMS W/@ |
| 140#@ | 1585263390 | SPRING, BRUSH | 3 | |
| 150#@ | 1585263370 | BRUSH | 1 | |
| 160# | 1983763200 | FRAME, END | 1 | INCLUDES ITEMS W/♦ |
| 170#♦ | 1585263250 | BUSH | 1 | |
| 180# | 1585293310 | SCREW, PAN HEAD | 1 | |

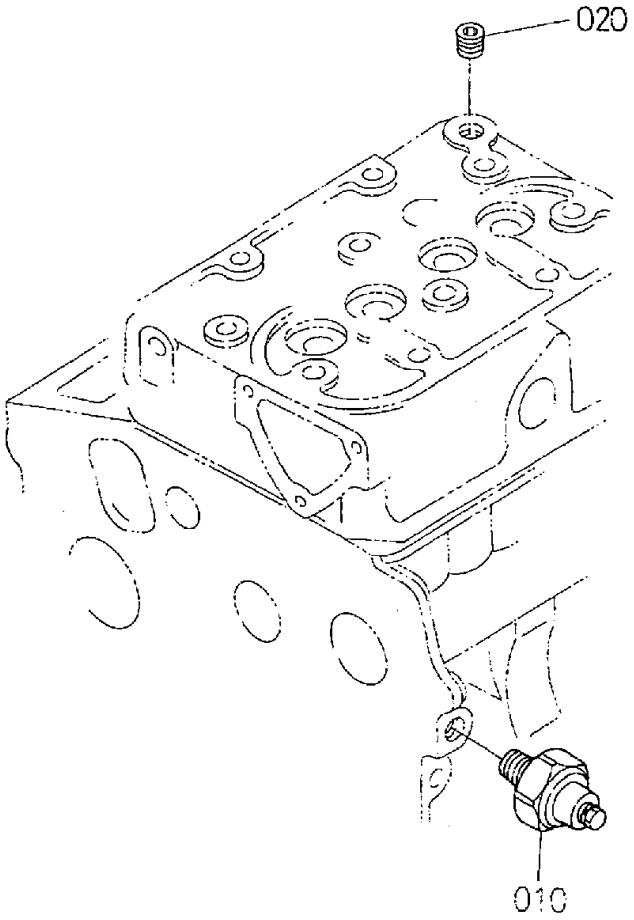
020
010

# KUBOTA Z482-E4B ENGINE — OIL SWITCH PLUG ASSY.

| NO. | PART NO. | PART NAME | QTY. | REMARKS |
|---|---|---|---|---|
| 010 | 1522139013 | SWITCH, OIL | 1 | |
| 020 | 1584196020 | PLUG | 1 | |

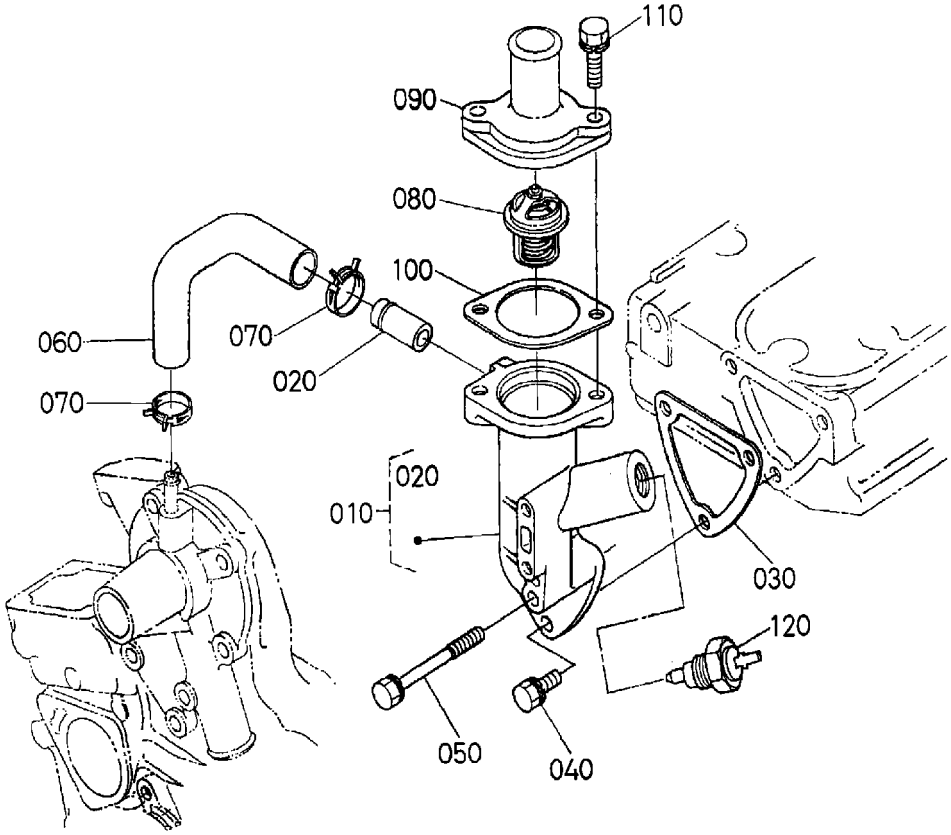
110
090
080
100
060
070
020
070
020
010
030
120
050
040

# KUBOTA Z482-E4B ENGINE — WATER FLANGE AND THERMOSTAT ASSY.

| NO. | PART NO. | PART NAME | QTY. | REMARKS |
|---|---|---|---|---|
| 010 | 1687572704 | COMP. FLANGE, WATER | 1 | INCLUDES ITEMS W/$ |
| 020$ | 1624173370 | PIPE, WATER RETURN | 1 | |
| 030 | 1584172923 | GASKET, WATER FLANGE | 1 | |
| 040 | 0102350616 | BOLT, SEMS | 2 | |
| 050 | 0102350650 | BOLT, SEMS | 1 | |
| 060 | 1685173350 | PIPE, WATER RETURN | 1 | |
| 070 | 1G68773362 | CLAMP, HOSE | 2 | |
| 080 | 1553173014 | THERMOSTAT ASSY. | 1 | |
| 090 | 1584173260 | COVER, THERMOSTAT | 1 | |
| 100 | 1685173270 | GASKET, THERMOSTAT | 1 | |
| 110 | 0102350622 | BOLT, SEMS | 2 | |
| 120 | 1753883040 | SWITCH, THERMOSTAT | 1 | |

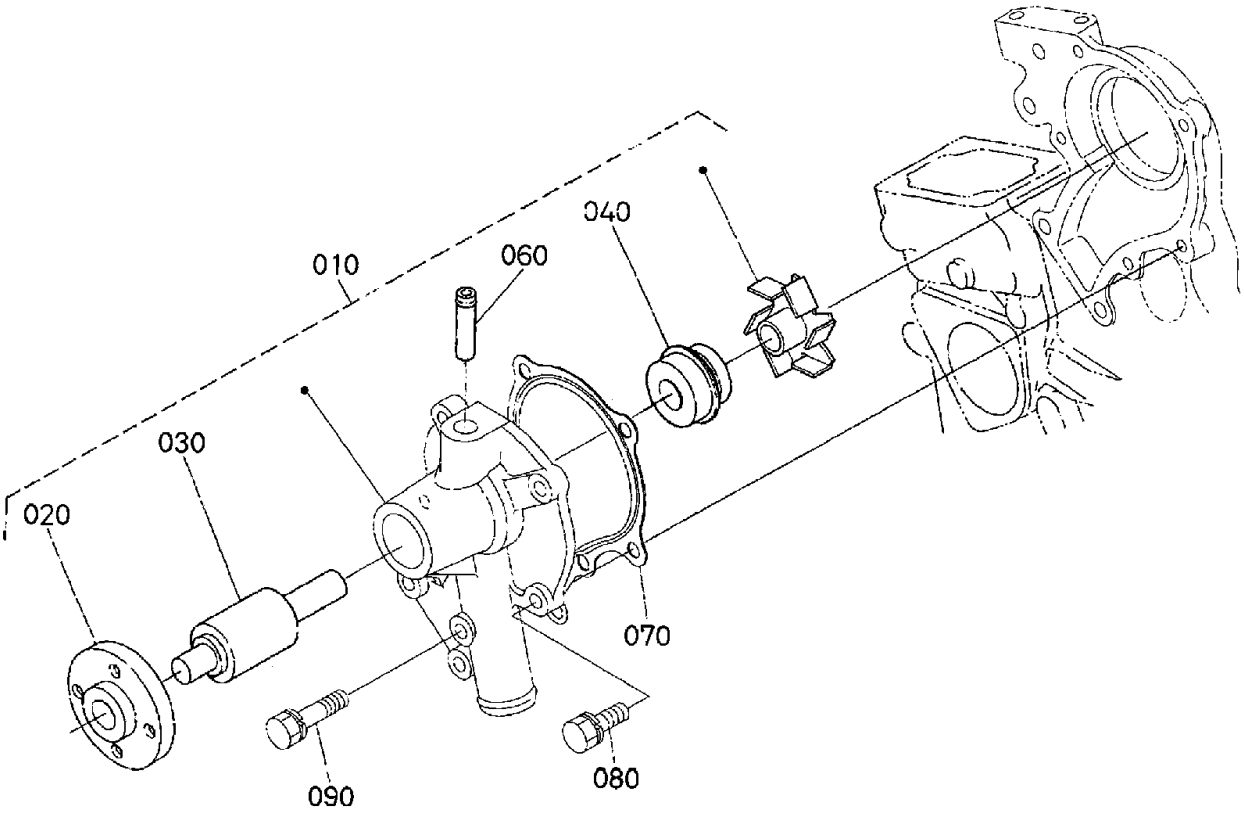
010
020
030
040
060
070
080
090

# KUBOTA Z482-E4B ENGINE — WATER PUMP ASSY.

| NO. | PART NO. | PART NAME | QTY. | REMARKS |
|---|---|---|---|---|
| 010 | 1E05173034 | WATER PUMP ASSY. | 1 | INCLUDES ITEMS W/% |
| 020% | 1585273520 | FLANGE, WATER PUMP | 1 | |
| 030% | 1585273550 | BEARING | 1 | |
| 040% | 1548173050 | SEAL, MECHANICAL ASSY. | 1 | |
| 060% | 1585273340 | PIPE, WATER RETURN | 1 | |
| 070 | 1687173430 | GASKET, WATER PUMP | 1 | |
| 080 | 0102350622 | BOLT, SEMS | 4 | |
| 090 | 0102350638 | BOLT, SEMS | 1 | |

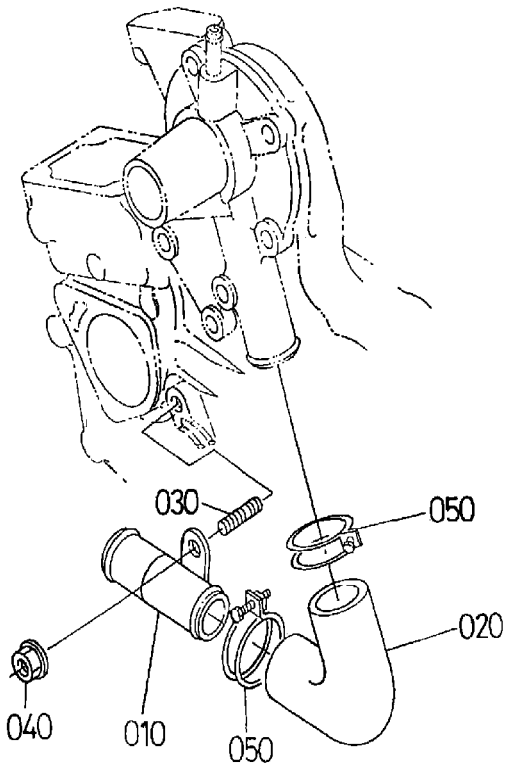
030
050
020
040
010
050

# KUBOTA Z482-E4B ENGINE — WATER PIPE ASSY.

| NO. | PART NO. | PART NAME | QTY. | REMARKS |
|---|---|---|---|---|
| 010 | 1680572860 | PIPE, WATER | 1 | |
| 020 | 1680572870 | HOSE, WATER | 1 | |
| 030 | 1584191510 | STUD | 1 | |
| 040 | 0275150060 | NUT, FLANGE | 1 | |
| 050 | 1584172960 | BAND, PIPE | 2 | |

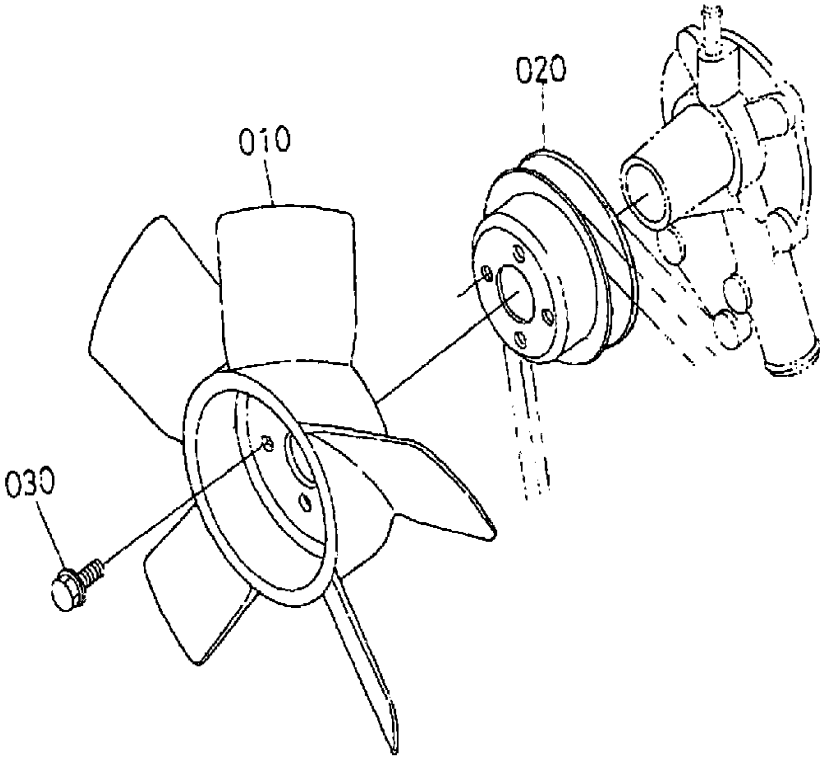
020
010
030

| NO. | PART NO. | PART NAME | QTY. | REMARKS |
|---|---|---|---|---|
| 010 | 1586774112 | FAN | 1 | |
| 020 | 1584174250 | PULLEY, FAN | 1 | |
| 030 | 0175450610 | BOLT, FLANGE | 4 | |

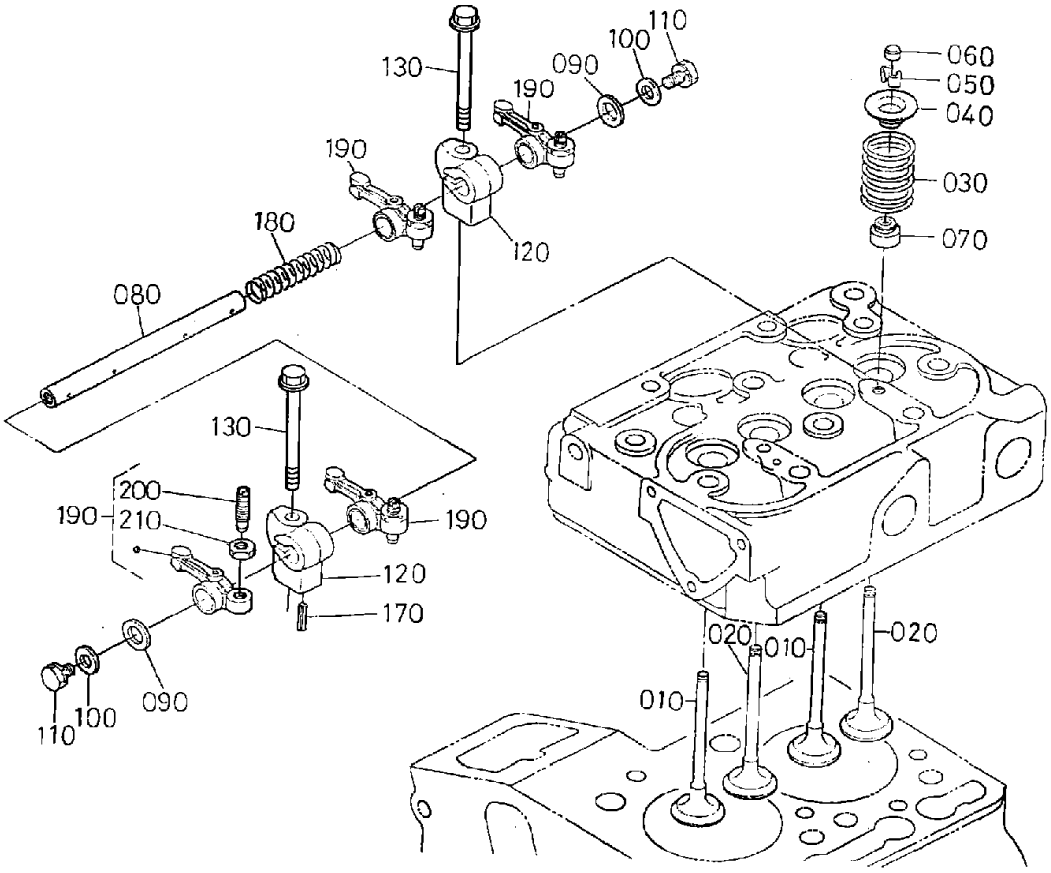
130
110
100
090
190
060
050
040
190
030
180
120
070
080
130
200
190
210
190
120
170
020
010
020
090
100
110
010

# KUBOTA Z482-E4B ENGINE — VALVE AND ROCKER ARM ASSY.

| NO. | PART NO. | PART NAME | QTY. | REMARKS |
|---|---|---|---|---|
| 010 | 1G68613110 | VALVE, INLET | 2 | |
| 020 | 1G68613120 | VALVE, EXHAUST | 2 | |
| 030 | 1460113240 | SPRING, VALVE | 4 | |
| 040 | 1460113330 | RETAINER, VALVE SPRING | 4 | |
| 050 | 1460113980 | COLLET, VALVE SPRING SET | 4 | |
| 060 | 1685113280 | CAP, VALVE | 4 | |
| 070 | 1142013150 | SEAL, VALVE STEM | 4 | |
| 080 | 1584114264 | SHAFT, ROCKER ARM | 1 | |
| 090 | 1687114430 | WASHER | 2 | |
| 100 | 1584194022 | WASHER, FLAT | 2 | |
| 110 | 0102350610 | BOLT, SEMS | 2 | |
| 120 | 1G95814350 | BRACKET, ROCKER ARM | 2 | |
| 130 | 0175450640 | BOLT FLANGE | 2 | |
| 170 | 0541100420 | PIN, SPRING | 1 | |
| 180 | 1460114312 | SPRING, ROCKER ARM | 1 | |
| 190 | 1584114036 | ARM, ROCKER ASSY..... | 4..... | INCLUDES ITEMS W/$ |
| 200$ | 1584114230 | SCREW, ADJUSTING | 4 | |
| 210$ | 1460114240 | NUT | 4 | |

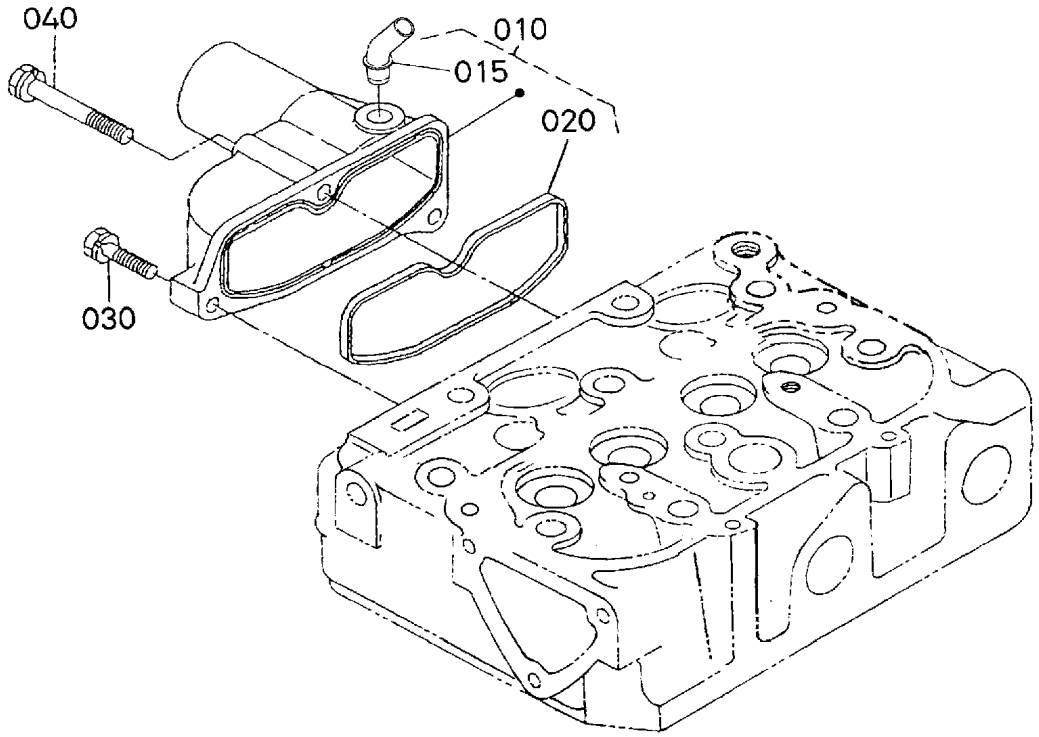
040
010
015
020
030

| NO. | PART NO. | PART NAME | QTY. | REMARKS |
|---|---|---|---|---|
| 010 | 1G95711772 | MANIFOLD, INLET ASSY | 1 | INCLUDES ITEMS W/# |
| 015# | 1G95905550 | PIPE BREATHER | 1 | |
| 020# | 1584111820 | GASKET, IN-MANIFOLD | 1 | |
| 030 | 0175450616 | BOLT, FLANGE | 2 | |
| 040 | 0102350645 | BOLT, SEMS | 1 | |

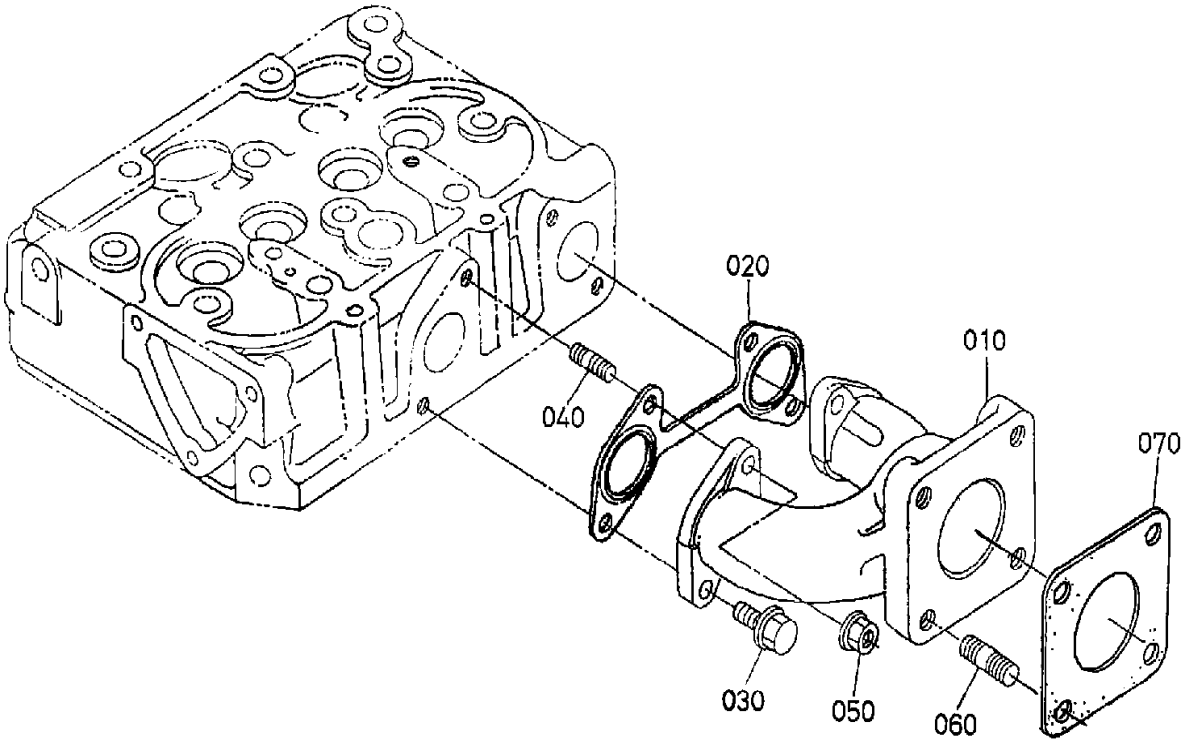
020
010
040
070
030
050
060

# KUBOTA Z482-E4B ENGINE — EXHAUST MANIFOLD ASSY.

| NO. | PART NO. | PART NAME | QTY. | REMARKS |
|---|---|---|---|---|
| 010 | 1584112313 | MANIFOLD, EXHAUST | 1 | |
| 020 | 1685112360 | GASKET, EX-MANIFOLD | 1 | |
| 030 | 1J09091010 | BOLT, UBS | 2 | |
| 040 | 0151350620 | BOLT, STUD | 2 | |
| 050 | 0275650060 | NUT, UBS | 2 | |
| 060 | 0151350822 | BOLT, STUD | 4 | |
| 070 | 1526312370 | GASKET, MUFFLER NA | 1 | |

# KUBOTA Z482-E4B ENGINE — GLOW LAMP AND TIMER ASSY.

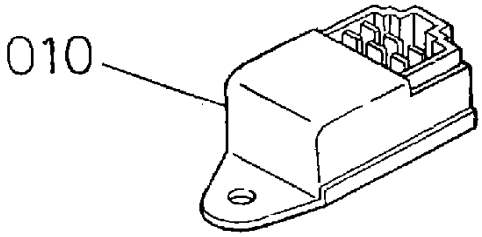

# KUBOTA Z482-E4B ENGINE — GLOW LAMP AND TIMER ASSY.

| NO. | PART NO. | PART NAME | QTY. | REMARKS |
|---|---|---|---|---|
| 010 | 1569465990 | TIMER, GLOW LAMP | 1 | |

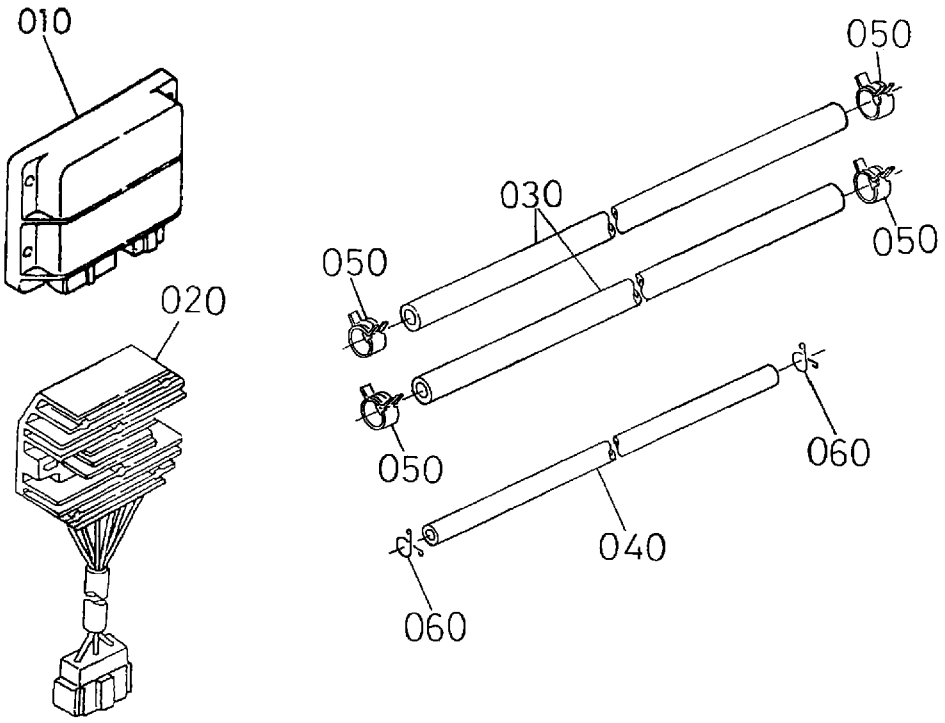
010
020
050
030
050
050
050
060
040
060

# KUBOTA Z482-E4B ENGINE — ACCESSORIES AND SERV. ASSY.

| NO. | PART NO. | PART NAME | QTY. | REMARKS |
|---|---|---|---|---|
| 010 | 1747260604 | EMERGENCY UNIT | 1 | |
| 020 | 1584464603 | COMP. REGULATOR | 1 | |
| 030 | 0966180240 | TUBE, FUEL 240MM | 1 | |
| 030 | 0966180400 | TUBE, FUEL 400MM | 1 | |
| 040 | 0966140240 | TUBE, FUEL | 1 | |
| 040 | 0966140320 | TUBE, FUEL | 1 | |
| 050 | 1491142750 | CLIP, PIPE | 4 | |
| 060 | 1497142750 | CLIP, PIPE | 6 | |

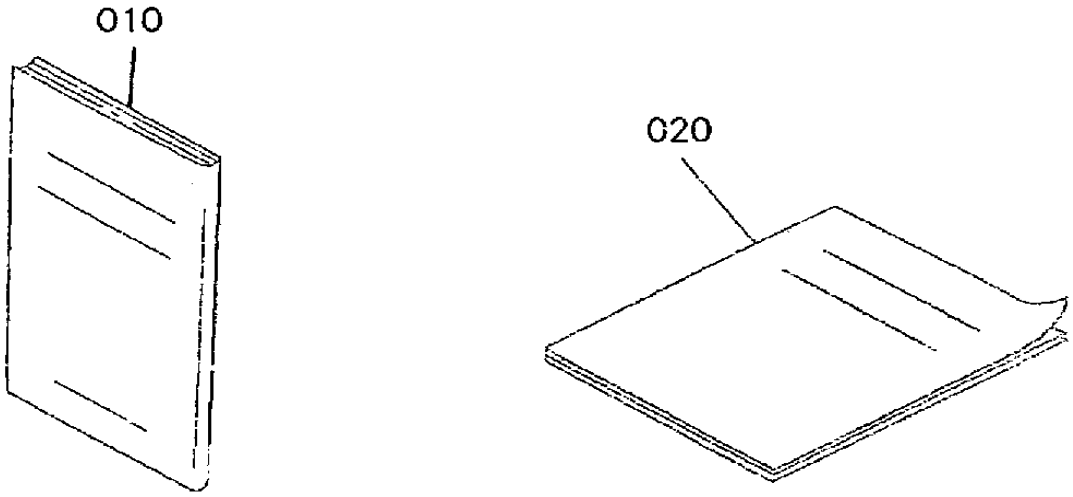
010
020

# KUBOTA Z482-E4B ENGINE — LABEL AND OPS MANUAL ASSY.

| NO. | PART NO. | PART NAME | QTY. | REMARKS |
|---|---|---|---|---|
| 010 | 1J09089160 | OPERATOR'S MANUAL | 1 | |
| 020 | 1J01389810 | STATEMENT WARRANTY | 1 | |