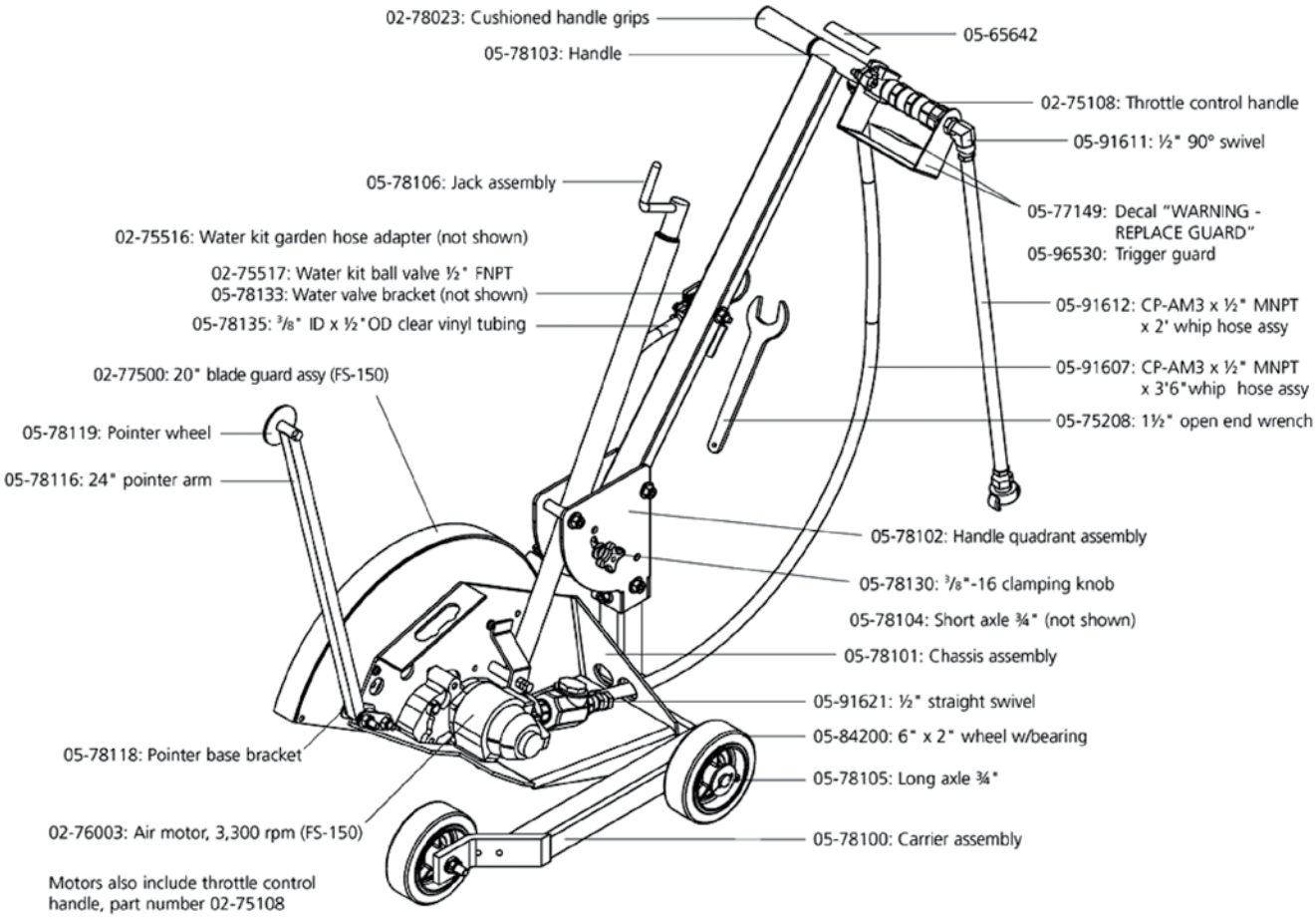
02-78023: Cushioned handle grips
05-78103: Handle
05-65642
02-75108: Throttle control handle
05-91611: ½" 90° swivel
05-78106: Jack assembly
05-77149: Decal "WARNING - REPLACE GUARD"
05-96530: Trigger guard
02-75516: Water kit garden hose adapter (not shown)
02-75517: Water kit ball valve ½" FNPT
05-78133: Water valve bracket (not shown)
05-78135: ⅜" ID x ½"OD clear vinyl tubing
05-91612: CP-AM3 x ½" MNPT x 2' whip hose assy
05-91607: CP-AM3 x ½" MNPT x 3'6"whip hose assy
02-77500: 20" blade guard assy (FS-150)
05-75208: 1½" open end wrench
05-78119: Pointer wheel
05-78116: 24" pointer arm
05-78102: Handle quadrant assembly
05-78130: ⅜"-16 clamping knob
05-78104: Short axle ¾" (not shown)
05-78101: Chassis assembly
05-91621: ½" straight swivel
05-84200: 6" x 2" wheel w/bearing
05-78118: Pointer base bracket
05-78105: Long axle ¾"
02-76003: Air motor, 3,300 rpm (FS-150)
05-78100: Carrier assembly
Motors also include throttle control handle, part number 02-75108

MK Diamond Products, Inc.

MK-APC/W	Heavy duty walk-behind air powered saw with gear box, 20" blade capacity, oiler, whip hose, water feed kit, wrenches, and one quart of ice free air oil. 3,300 RPM saw cuts to 8" depth.	05-78020
AIR OIL	Quart of petroleum based ice free oil.	02-17059
OILER	#5-PF, 1/2" NPT	02-75504
WATER TANK KIT	8 gallon tank attaches to MK-APC/W for dust suppression. Includes mounting frame and brackets.	05-78010

3,300 RPM Air Motor 02-76003
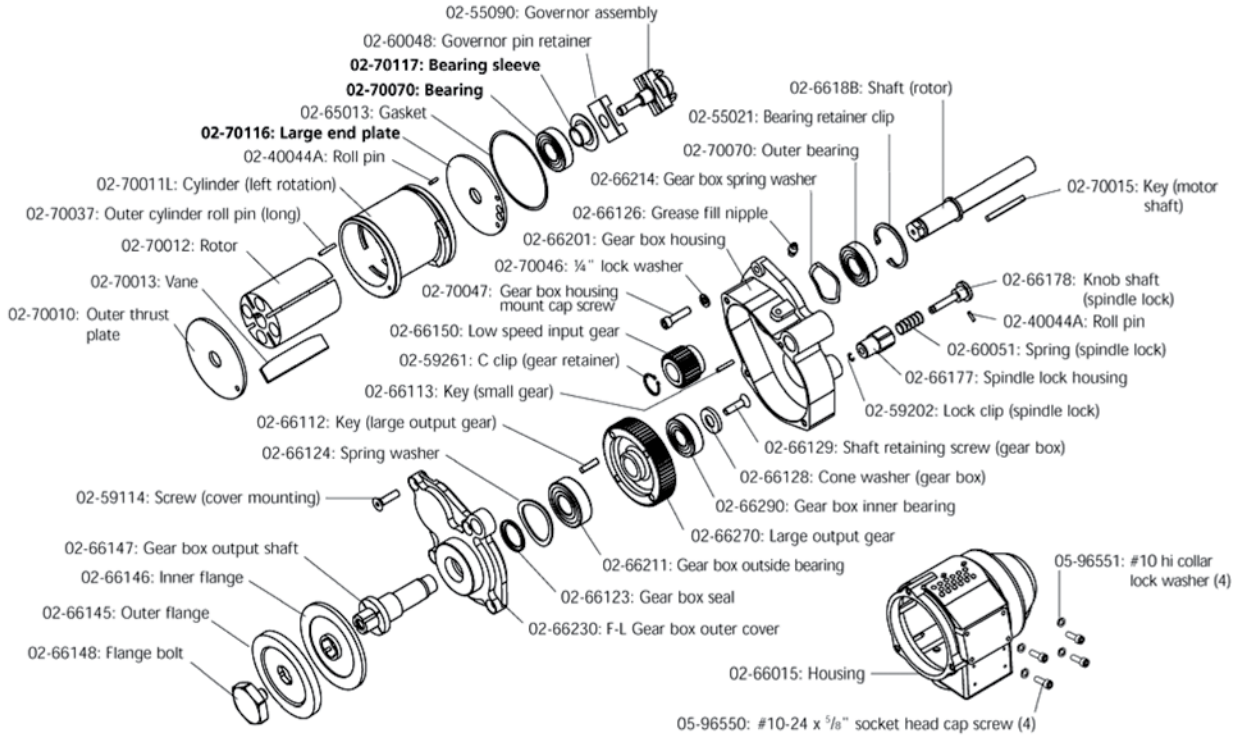
Items in bold below (bearing sleeve, bearing and large end plate) can be purchased as an upgrade kit (part # 02-70116A) for saw models prior to serial number UU-0981.