verizon

10300 OLD ALABAMA ROAD CONNECTOR
ALPHARETTA, GA 30022

POND FORK

SITE #: 581347

FUZE PROJECT ID: 16350691

SITE ADDRESS (E-911 TBD)

4410 HOLLY SPRINGS ROAD
GILLSVILLE, GA 30543
HALL COUNTY
LATITUDE: 34° 15' 00.39" N
LONGITUDE: 83° 40' 41.94" W
TAX/PIN #: 15002 000061
ZONING: AR-IV (AGRICULTURAL-RESIDENTIAL-IV DISTRICT)

HALL COUNTY SHERIFF DEPARTMENT
2859 BROWNS BRIDGE ROAD
GAINESVILLE, GA 30504
PHONE: (770) 531-6900
ATTN.: CUSTOMER SERVICE

HALL COUNTY FIRE DEPARTMENT
470 CRESCENT DRIVE
GAINESVILLE, GA 30501
PHONE: (770) 531-6838
ATTN.: CUSTOMER SERVICE

VICINITY MAP

FROM ALPHARETTA OFFICE: HEAD NORTH 381 FT; TURN RIGHT TOWARD OLD ALABAMA RD CON 82 FT; TURN LEFT AT THE 1ST CROSS STREET ONTO OLD ALABAMA RD CON 0.3 MI; TURN RIGHT ONTO MANSELL RD 0.5 MI; USE THE LEFT 2 LANES TO TURN LEFT ONTO HAYNES BRIDGE RD 0.5 MI; CONTINUE STRAIGHT TO STAY ON HAYNES BRIDGE RD 0.4 MI; USE THE RIGHT LANE TO TAKE THE RAMP ONTO GA-400 N/US-19 N 0.5 MI; MERGE ONTO GA-400 N/US-19 N 11.7 MI; TAKE THE GA-20 E EXIT TOWARD BUFORD 0.2 MI; KEEP RIGHT AT THE FORK, FOLLOW SIGNS FOR STATE HWY 20 E AND MERGE ONTO GA-20 E/STATE HWY 20 E/BUFORD HWY 0.2 MI; MERGE ONTO GA-20 E/STATE HWY 20 E/BUFORD HWY 328 FT; KEEP RIGHT TO CONTINUE ON GA-20 E 8.9 MI; USE THE LEFT 2 LANES TO TURN LEFT ONTO PEACHTREE INDUSTRIAL BLVD 3.7 MI; CONTINUE ONTO MCEVER RD 1.0 MI; TURN RIGHT ONTO GA-347 E/FRIENDSHIP RD/LANIER ISLANDS PKWY 1.5 MI; TURN LEFT TO MERGE ONTO I-985 N 0.3 MI; MERGE ONTO I-985 N 12.8 MI; TAKE EXIT 22 TO MERGE ONTO US-129 S 3.3 MI; TURN LEFT ONTO GA-323 E 2.5 MI; SLIGHT RIGHT ONTO GA-82 S 3.8 MI. THE DESTINATION WILL BE ON THE RIGHT.

DRIVING DIRECTIONS

JURISDICTION:
HALL COUNTY

STATE:
GEORGIA

TOWER TYPE:
SELF SUPPORT TOWER

TOWER HEIGHT:
255' (265' TO HIGHEST APPURTENANCE)

NUMBER OF CARRIERS:
0 EXISTING, 1 PROPOSED

USE:
PROPOSED TELECOMMUNICATIONS TOWER AND UNMANNED EQUIPMENT

FLOOD INFO
SITE IS LOCATED WITHIN FEMA FLOOD MAP AREA 13139C0225F DATED 09/29/2006 WITHIN FLOOD ZONE X.

PROJECT SUMMARY

DEVELOPER
VERIZON WIRELESS
10300 OLD ALABAMA RD CON.
ALPHARETTA, GA 30022
PHONE: (678) 277-3612
ATTN: MATT HARTLEY

POWER COMPANY
JACKSON EMC
PHONE: (770) 536-2415
ATTN.: LUKE PARKER

PROPERTY OWNER
LAZY L LAND AND CATTLE COMPANY, LLC
3292 THOMPSON BRIDGE ROAD
GAINESVILLE, GA 30506
PHONE: (770) 530-8414
ATTN.: MARK LINKESH

CONSULTANT
KIMLEY-HORN AND ASSOCIATES, INC.
11720 AMBER PARK DRIVE, SUITE 600
ALPHARETTA, GA 30009
PHONE: (678) 274-5032
ATTN.: DAVID COUSINS, P.E.

CONTACTS

SHEET NO.	SHEET TITLE
T1	COVER SHEET
--	SITE SURVEY (SHEET 1 OF 7)
--	SITE SURVEY (SHEET 2 OF 7)
--	SITE SURVEY (SHEET 3 OF 7)
--	SITE SURVEY (SHEET 4 OF 7)
--	SITE SURVEY (SHEET 5 OF 7)
--	SITE SURVEY (SHEET 6 OF 7)
--	SITE SURVEY (SHEET 7 OF 7)
N1	GENERAL NOTES
C0	OVERALL PARCEL PLAN
C1	OVERALL SITE PLAN
C2	SITE PLAN
C3	EQUIPMENT PAD LAYOUT
C4	EQUIPMENT RACK DETAIL - FRONT
C5	EQUIPMENT RACK DETAIL - REAR
C6	CONCRETE PAD FOUNDATION DETAILS
C7	FENCE, GATE AND COMPOUND DETAILS
C8	GRADING AND EROSION CONTROL PLAN
C8.1	GRADING AND EROSION CONTROL PLAN
C8.2	GRADING AND EROSION CONTROL PLAN
C9	GRADING AND EROSION CONTROL DETAILS
C10	ACCESS ROAD DETAILS
C11	SITE SIGNAGE DETAILS
C12	WAVEGUIDE BRIDGE DETAILS
C13	ANTENNA AND TOWER ELEVATION DETAILS
L1	LANDSCAPING PLAN
E1	ELECTRICAL NOTES
E2	UTILITY SERVICE ROUTING PLAN
E3	OVERALL UTILITY ROUTING PLAN
E4	METER RACK DETAILS - FRONT
E4.1	METER RACK DETAILS - REAR
E5	ELECTRICAL SINGLE LINE DIAGRAM
E6	PANEL SCHEDULE
E7	ELECTRICAL DETAILS
E8	GROUNDING NOTES
E9	GROUNDING PLAN
E10	GROUNDING SINGLE LINE DIAGRAM
E11	GROUNDING DETAILS
E12	GROUNDING DETAILS

SHEET INDEX

HALL COUNTY PLANNING & DEVELOPMENT
2875 BROWNS BRIDGE ROAD, 3RD FLOOR
GAINESVILLE, GA 30504
PHONE: 770) 531-6809
ATTN.: CUSTOMER SERVICE

PERMIT INFORMATION

verizon
10300 OLD ALABAMA ROAD CONNECTOR
ALPHARETTA, GEORGIA 30022

PROJECT INFORMATION:
SITE NAME:
POND FORK
SITE No.: 581347
FUZE PROJECT #: 16350691
4410 HOLLY SPRINGS ROAD
GILLSVILLE, GA 30543
HALL COUNTY

PLANS PREPARED BY:
Kimley»Horn
11720 AMBER PARK DRIVE, SUITE 600
ALPHARETTA, GA 30009
PHONE: 770-619-4280
WWW.KIMLEY-HORN.COM

REV:	DATE:	ISSUED FOR:	BY:
7			
6			
5			
4			
3			
2			
1	08/31/21	CONSTRUCTION	DRC
0	05/18/21	CONSTRUCTION	DRC
A	04/29/21	PRELIMINARY	DRC

LICENSER:
GEORGIA REGISTERED No. PE043908 PROFESSIONAL ENGINEER DAVID RAINEY COUSINS
5/12/21

KHA PROJECT NUMBER:
013509266

DRAWN BY: TDM
CHECKED BY: TRN

SHEET TITLE:
COVER SHEET

SHEET NUMBER:
T1

K:\ATL_Wireless\000_Verizon\2020 Sites\Pond Fork A\CAD\CD\GA-GB.dwg ---- 10/12/21 8:41 AM by: Drew.Pitts

This document, together with the concepts and designs presented herein, as an instrument of service, is intended only for the specific purpose and client for which it was prepared. Reuse of and improper reliance on this document without written authorization and adaptation by Kimley-Horn and Associates, Inc. shall be without liability to Kimley-Horn and Associates, Inc.

Copyright Kimley-Horn and Associates, Inc., 2021

1.00 GENERAL NOTES

1.01 ALL MATERIALS AND WORKMANSHIP SHALL CONFORM TO THE DRAWINGS AND SPECIFICATIONS. ALL WORK SHALL BE DONE IN ACCORDANCE WITH THE LATEST EDITION OF THE STATE, LOCAL AND NATIONAL CODES, ORDINANCES AND OR REGULATIONS APPLICABLE TO THIS PROJECT.

1.02 THE CONTRACTOR SHALL BE RESPONSIBLE FOR COORDINATING THE WORK OF ALL TRADES AND SHALL CHECK ALL DIMENSIONS. ALL DISCREPANCIES SHALL BE CALLED TO THE ATTENTION OF THE PROJECT MANAGER AND/OR ENGINEER AND BE RESOLVED BEFORE PROCEEDING WITH WORK. WHERE THERE IS A CONFLICT BETWEEN DRAWING AND VERIZON SPECIFICATIONS, THE VERIZON PROJECT ENGINEER SHOULD BE CONTACTED FOR CLARIFICATION.

1.03 ALL INFORMATION SHOWN ON THE DRAWINGS RELATIVE TO EXISTING CONDITIONS IS GIVEN AS THE BEST PRESENT KNOWLEDGE, BUT WITHOUT GUARANTEE OF ACCURACY. WHERE ACTUAL CONDITIONS CONFLICT WITH THE DRAWINGS, THEY SHALL BE REPORTED TO THE PROJECT MANAGER AND/OR ENGINEER SO THAT PROPER REVISIONS MAY BE MADE. MODIFICATION OF DETAILS OF CONSTRUCTION SHALL NOT BE MADE WITHOUT WRITTEN APPROVAL OF THE PROJECT MANAGER AND/OR ENGINEER.

1.04 CONTRACTOR SHALL REVIEW AND BE FAMILIAR WITH SITE CONDITIONS AS SHOWN ON THE ATTACHED SITE PLAN AND/OR SURVEY DRAWINGS.

1.05 WAVEGUIDE BRIDGE AND EQUIPMENT CABINETS ARE SHOWN FOR REFERENCE ONLY. REFER TO SEPARATE DRAWINGS FOR SPECIFIC INFORMATION.

1.06 ALL FINISHED GRADES SHALL SLOPE MINIMUM 1/4 IN./FT. AWAY FROM EQUIPMENT IN ALL DIRECTIONS. CONTRACTOR SHALL SLOPE SWALES AS REQUIRED ALONG EXISTING TERRAIN TO DRAIN AWAY FROM COMPOUND AND ACCESS DRIVE.

1.07 THE PROPOSED TOWER AND TOWER FOUNDATIONS WERE DESIGNED BY OTHERS. TOWER INFORMATION PROVIDED ON THESE PLANS ARE PROVIDED FOR REFERENCE PURPOSES ONLY. NOTIFY ENGINEER OR PROJECT MANAGER OF ANY CONFLICTS OR DISCREPANCIES. CONTRACTOR TO OBTAIN COPY OF TOWER DESIGN DRAWINGS, IF AVAILABLE, FROM VERIZON PROJECT MANAGER TO CONFIRM COAX ROUTING AND ANTENNA MOUNT INFORMATION.

1.08 THE CONTRACTOR SHALL PROVIDE ADEQUATE EXCAVATION SLOPING, SHORING, BRACING, AND GUYS IN ACCORDANCE WITH ALL NATIONAL, STATE, AND LOCAL SAFETY ORDINANCES.

1.09 UPON COMPLETION OF CONSTRUCTION, CONTRACTOR IS RESPONSIBLE FOR REPAIRING ANY DAMAGE CAUSED BY CONSTRUCTION ACTIVITIES TO THE EXISTING ACCESS ROAD AND COMPOUND GRAVEL AREAS. ANY NEW FILL MATERIALS SHALL BE COMPACTED.

1.10 THE CONTRACTOR IS HEREBY NOTIFIED THAT PRIOR TO COMMENCING CONSTRUCTION, HE IS RESPONSIBLE FOR CONTACTING THE UTILITY COMPANIES INVOLVED AND SHALL REQUEST A VERIFICATION AT THE CONSTRUCTION SITE OF THE LOCATIONS OF THEIR UNDERGROUND UTILITIES AND WHERE THEY MAY POSSIBLY CONFLICT WITH THE PLACEMENT OF IMPROVEMENTS AS SHOWN ON THESE PLANS. THE CONTRACTOR OR ANY SUBCONTRACTOR FOR THIS CONTRACT WILL BE REQUIRED TO NOTIFY "GEORGIA 811" 48 HOURS IN ADVANCE OF PERFORMING ANY WORK BY CALLING THE TOLL FREE NUMBER (800) 282-7411 (OR 811). ANY UTILITIES DAMAGED BY CONSTRUCTION ACTIVITIES SHALL BE REPAIRED BY THE CONTRACTOR, AT NO EXPENSE TO THE OWNER.

1.11 CONTRACTOR TO PROVIDE DUMPSTER AND PORTABLE TOILET FACILITY DURING CONSTRUCTION.

1.12 CONTRACTOR TO PROVIDE STYMIE LOCK OR EQUIVALENT AS APPROVED BY VERIZON PROJECT MANAGER.

1.13 CONTRACTOR TO PROVIDE ANY NECESSARY SIGNAGE PER VERIZON PROJECT MANAGER'S INSTRUCTIONS. SEE DETAIL ON SHEET C11.

2.00 EQUIPMENT FOUNDATION NOTES

2.01 FOUNDATIONS ARE DESIGNED FOR A PRESUMPTIVE ALLOWABLE SOIL BEARING CAPACITY OF 2,000 PSF. CONTRACTOR SHALL VERIFY SOIL CONDITIONS AND BEARING CAPACITY PRIOR TO CONSTRUCTION.

2.02 EXCAVATE A MINIMUM 18" BELOW PROPOSED EQUIPMENT FOUNDATIONS OF EXPANSIVE, ORGANIC, UNCONSOLIDATED OR OTHERWISE UNACCEPTABLE MATERIAL AND REPLACE WITH WELL-COMPACTED MATERIAL ACCEPTABLE TO VERIZON.

2.03 CONTRACTOR SHALL BE RESPONSIBLE FOR LOCATING, PROTECTING, AND RELOCATING AS REQUIRED ALL SERVICE AND UTILITY LINES IN VICINITY OF THE WORK SITE. ALL EXCAVATIONS NEAR THESE LINES TO BE CARRIED OUT WITH EXTREME CAUTION. COORDINATE ALL RELOCATIONS WITH THE PROPERTY OWNER.

2.04 CONTRACTOR TO CUT/FILL EXISTING COMPOUND SUBSOIL TO PROVIDE AN AREA AS LEVEL AS POSSIBLE FOR THE EQUIPMENT FOUNDATIONS. ALL FILL AREAS ARE TO BE FILLED WITH SUITABLE MATERIALS. FILL MATERIALS ARE TO BE PLACED, COMPACTED, AND TESTED IN MAXIMUM LAYERS OF 8". COMPACTION OF ALL FILL MATERIAL SHALL ACHIEVE 95 PERCENT OF MAXIMUM DRY DENSITY AT OPTIMUM MOISTURE CONTENT IN ACCORDANCE WITH ASTM D 698. ALL TESTS MUST MEET THE MINIMUM SPECIFIED SOIL BEARING CAPACITY. COMPACTION TESTING IS BY THE GEOTECHNICAL TESTING COMPANY DESIGNATED FOR THE PROJECT. SCHEDULING AND COORDINATION IS THE RESPONSIBILITY OF THE GENERAL CONTRACTOR. REPORTS OF ALL TESTING ARE TO BE PROMPTLY DELIVERED OR FAXED TO THE VERIZON WIRELESS PROJECT MANAGER.

2.05 CONCRETE SHALL HAVE A MINIMUM COMPRESSIVE STRENGTH OF 4,000 PSI AT 28 DAYS AND SHALL BE INSTALLED IN ACCORDANCE WITH THE LATEST REVISION TO ACI-318 BUILDING CODE REQUIREMENTS FOR REINFORCED CONCRETE.

2.06 CONCRETE SHALL HAVE A SLUMP BETWEEN 3" AND 6".

2.07 FIBERS FOR CONCRETE SHALL BE FIBERMESH 650, 100 PERCENT VIRGIN POLYPROPYLENE FIBRILLATED FIBERS, e3 PATENTED TECHNOLOGY PATENTED TECHNOLOGY, CONTAINING NO REPROCESSED OLEFIN MATERIALS. THE FIBERS SHALL CONFORM TO ASTM C1116 TYPE III AND MANUFACTURED SPECIFICALLY FOR THE SECONDARY REINFORCEMENT OF CONCRETE.

2.08 THE FIBERS SHALL BE MANUFACTURED IN AN ISO 9001:2008 CERTIFIED MANUFACTURING FACILITY. UNLESS OTHERWISE STATED, FIBERMESH 650 MACRO-SYNTHETIC FIBERS SHALL BE ADDED TO THE CONCRETE AT THE BATCHING PLANT AT THE RECOMMENDED APPLICATION RATE OF 3 LBS/YD^3 AND MIXED FOR A SUFFICIENT TIME (MINIMUM 5 MINUTES AT FULL MIXING SPEED) TO ENSURE UNIFORM DISTRIBUTION OF THE FIBERS THROUGHOUT THE CONCRETE. FIBROUS CONCRETE REINFORCEMENT SHALL BE MANUFACTURED BY FIBERMESH, 4019 INDUSTRY DRIVE, CHATTANOOGA, TN 37416 USA, TEL: 800 621-1273, WEBSITE: WWW.FIBERMESH.COM

2.09 AT THE REQUEST OF THE VERIZON WIRELESS PROJECT MANAGER, TEST CYLINDERS SHALL BE MOLDED AND LABORATORY CURED IN ACCORDANCE WITH ASTM C31. THREE CYLINDERS SHALL BE TAKEN FOR EACH DAY'S CONCRETE PLACEMENT. CYLINDERS SHALL BE TESTED IN ACCORDANCE WITH THE LATEST REVISION TO ASTM C39.

2.10 CHAMFER ALL EXPOSED EXTERNAL CORNERS OF CONCRETE WITH ¾" x 45° CHAMFER, UNLESS OTHERWISE NOTED.

2.11 CONCRETE FORMWORK IS TO BE STRIPPED WITHIN 48 HOURS. VIBRATION OF THE CONCRETE MUST ASSURE THAT HONEYCOMBING WILL BE AT A MINIMUM. MECHANICAL VIBRATION OF ALL CONCRETE IS REQUIRED UNLESS OTHERWISE DIRECTED BY VERIZON WIRELESS' PROJECT MANAGER. ABOVE GRADE CONCRETE IS TO BE RUBBED AND PATCHED TO ASSURE SMOOTH FINISH AT TIME OF FORMS REMOVAL. CONTRACTOR SHALL PROVIDE A BROOM FINISH ON THE TOP SURFACE OF THE EQUIPMENT FOUNDATION UNLESS OTHERWISE DIRECTED BY VERIZON WIRELESS' PROJECT MANAGER.

2.12 TOPS OF CONCRETE FOUNDATION MUST BE WITHIN 0.02' OF ELEVATION REQUIRED.

2.13 TOP OF FOUNDATION FINISH TO BE LEVEL ±⅛" IN 10'.

2.14 TOP OF FOUNDATION TO HAVE MEDIUM BROOM FINISH.

2.15 CONTRACTOR SHALL REFER TO DRAWINGS OF OTHER TRADES AND VENDOR DRAWINGS FOR EMBEDDED ITEMS AND RECESSES NOT SHOWN ON THE STRUCTURAL DRAWINGS. CONTRACTOR SHALL VERIFY PLACEMENT OF EQUIPMENT AND LOCATION OF CONDUIT FOR MANUFACTURER'S AND VENDORS SPECIFICATIONS. IT SHALL BE THE RESPONSIBILITY OF THE CONTRACTOR TO PROVIDE ALL OPENINGS AND SLEEVES FOR PROPER DISTRIBUTION OF ALL UTILITIES.

verizon
10300 OLD ALABAMA ROAD CONNECTOR
ALPHARETTA, GEORGIA 30022

PROJECT INFORMATION:

SITE NAME:
POND FORK
SITE No.: 581347
FUZE PROJECT #: 16350691
4410 HOLLY SPRINGS ROAD
GILLSVILLE, GA 30543
HALL COUNTY

PLANS PREPARED BY:

Kimley»Horn
11720 AMBER PARK DRIVE, SUITE 600
ALPHARETTA, GA 30009
PHONE: 770-619-4280
WWW.KIMLEY-HORN.COM

REV:	DATE:	ISSUED FOR:	BY:
7			
6			
5			
4			
3			
2			
1	08/31/21	CONSTRUCTION	DRC
0	05/18/21	CONSTRUCTION	DRC
A	04/29/21	PRELIMINARY	DRC

LICENSER:

GEORGIA REGISTERED No. PE043908 PROFESSIONAL ENGINEER DAVID RAINEY COUSINS

10/12/21

KHA PROJECT NUMBER: 013509266

DRAWN BY: TDM CHECKED BY: TRN

SHEET TITLE: GENERAL NOTES

SHEET NUMBER: N1

K:\ATL_Wireless\000_Verizon\2020 Sites\Pond Fork A\CAD\CD\GA-GB.dwg ---- 10/12/21 8:41 AM by: Drew.Pitts

This document, together with the concepts and designs presented herein, as an instrument of service, is intended only for the specific purpose and client for which it was prepared. Reuse of and improper reliance on this document without written authorization and adaptation by Kimley-Horn and Associates, Inc. shall be without liability to Kimley-Horn and Associates, Inc.

Copyright Kimley-Horn and Associates, Inc., 2021

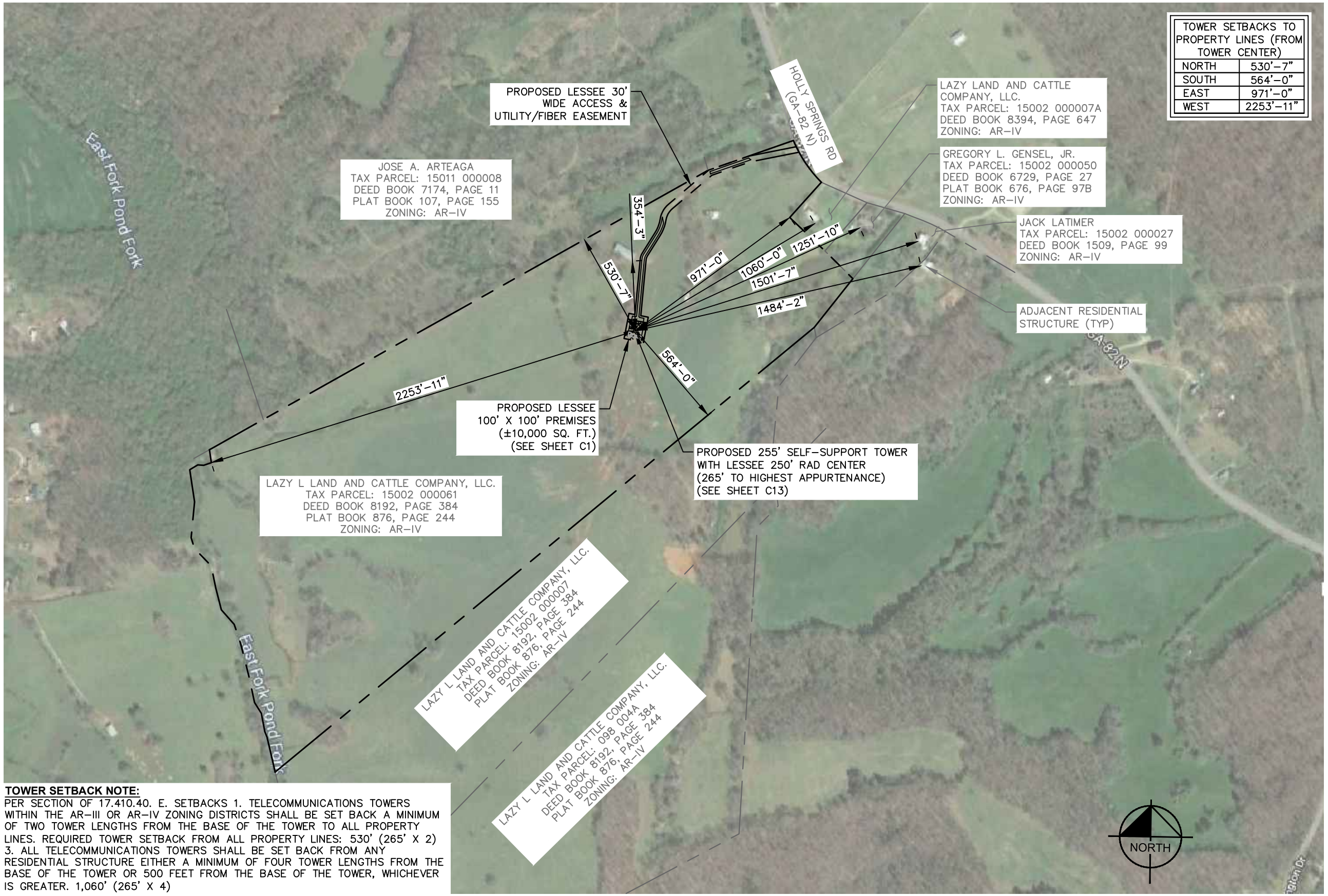

TOWER SETBACKS TO PROPERTY LINES (FROM TOWER CENTER)	
NORTH	530'-7"
SOUTH	564'-0"
EAST	971'-0"
WEST	2253'-11"

TOWER SETBACK NOTE:
PER SECTION OF 17.410.40. E. SETBACKS 1. TELECOMMUNICATIONS TOWERS WITHIN THE AR-III OR AR-IV ZONING DISTRICTS SHALL BE SET BACK A MINIMUM OF TWO TOWER LENGTHS FROM THE BASE OF THE TOWER TO ALL PROPERTY LINES. REQUIRED TOWER SETBACK FROM ALL PROPERTY LINES: 530' (265' X 2)
3. ALL TELECOMMUNICATIONS TOWERS SHALL BE SET BACK FROM ANY RESIDENTIAL STRUCTURE EITHER A MINIMUM OF FOUR TOWER LENGTHS FROM THE BASE OF THE TOWER OR 500 FEET FROM THE BASE OF THE TOWER, WHICHEVER IS GREATER. 1,060' (265' X 4)

SURVEY NOTE:
1. VERIZON WIRELESS STAFF SHALL COORDINATE WITH THE PROPERTY OWNER TO OBTAIN THE PROPER EASEMENT AGREEMENTS TO CONSTRUCT AND MAINTAIN EQUIPMENT IN AND AROUND THE TOWER COMPOUND.
2. PROPOSED COMPOUND LAYOUT BASED ON SURVEY PROVIDED BY THE LAND CONSULTANTS, LLC DATED 02/16/21 AND SITE VISIT ON 01/28/21.

1 / C0 OVERALL PARCEL PLAN
SCALE: 1" = 500'

0 250 500 1000
GRAPHIC SCALE: 1" = 500'

K:\ATL_Wireless\000_Verizon\2020 Sites\Pond Fork A\CAD\CD\GA-GB.dwg ---- 10/12/21 8:41 AM by: Drew.Pitts

verizon
10300 OLD ALABAMA ROAD CONNECTOR
ALPHARETTA, GEORGIA 30022

PROJECT INFORMATION:
SITE NAME:
POND FORK
SITE No.: 581347
FUZE PROJECT #: 16350691
4410 HOLLY SPRINGS ROAD
GILLSVILLE, GA 30543
HALL COUNTY

PLANS PREPARED BY:
Kimley»Horn
11720 AMBER PARK DRIVE, SUITE 600
ALPHARETTA, GA 30009
PHONE: 770-619-4280
WWW.KIMLEY-HORN.COM

REV:	DATE:	ISSUED FOR:	BY:
7			
6			
5			
4			
3			
2			
1	08/31/21	CONSTRUCTION	DRC
0	05/18/21	CONSTRUCTION	DRC
A	04/29/21	PRELIMINARY	DRC

LICENSER:
GEORGIA REGISTERED No. PE043908 PROFESSIONAL ENGINEER DAVID RAINEY COUSINS
10/12/21

KHA PROJECT NUMBER:
013509266

DRAWN BY: TDM
CHECKED BY: TRN

SHEET TITLE:
OVERALL PARCEL PLAN

SHEET NUMBER:
C0

This document, together with the concepts and designs presented herein, as an instrument of service, is intended only for the specific purpose and client for which it was prepared. Reuse of and improper reliance on this document without written authorization and adaptation by Kimley-Horn and Associates, Inc. shall be without liability to Kimley-Horn and Associates, Inc.

Copyright Kimley-Horn and Associates, Inc., 2021

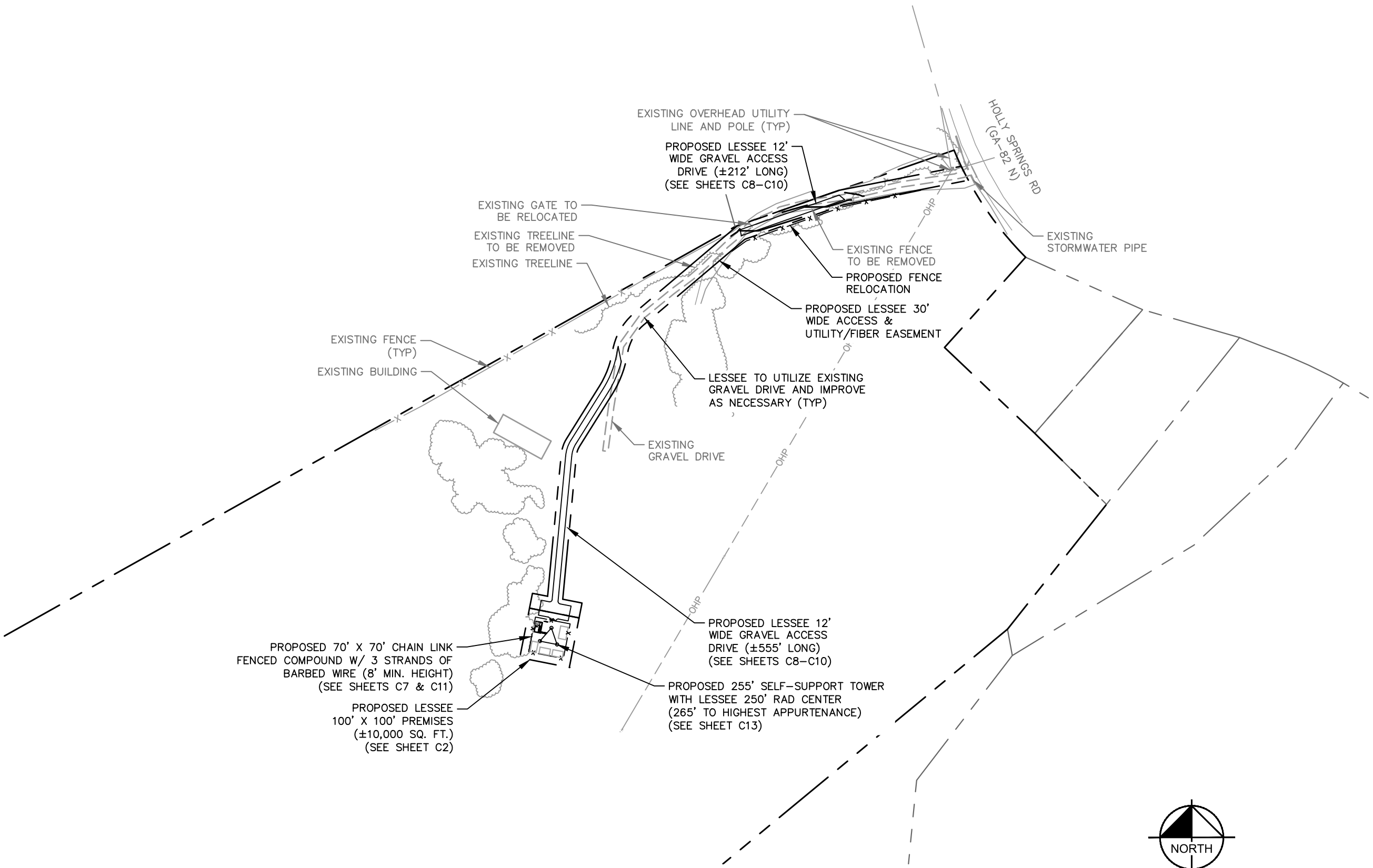

1 / C1 OVERALL SITE PLAN

SCALE: 1" = 200'

SURVEY NOTE:

1. VERIZON WIRELESS STAFF SHALL COORDINATE WITH THE PROPERTY OWNER TO OBTAIN THE PROPER EASEMENT AGREEMENTS TO CONSTRUCT AND MAINTAIN EQUIPMENT IN AND AROUND THE TOWER COMPOUND.
2. PROPOSED COMPOUND LAYOUT BASED ON SURVEY PROVIDED BY THE LAND CONSULTANTS, LLC DATED 02/16/21 AND SITE VISIT ON 01/28/21.

K:\ATL_Wireless\000_Verizon\2020 Sites\Pond Fork A\CAD\CD\GA-GB.dwg ---- 10/12/21 8:41 AM by: Drew.Pitts

verizon

10300 OLD ALABAMA ROAD CONNECTOR
ALPHARETTA, GEORGIA 30022

PROJECT INFORMATION:

SITE NAME:
POND FORK
SITE No.: 581347
FUZE PROJECT #: 16350691

4410 HOLLY SPRINGS ROAD
GILLSVILLE, GA 30543
HALL COUNTY

PLANS PREPARED BY:

Kimley»Horn

11720 AMBER PARK DRIVE, SUITE 600
ALPHARETTA, GA 30009
PHONE: 770–619–4280
WWW.KIMLEY–HORN.COM

REV:	DATE:	ISSUED FOR:	BY:
7			
6			
5			
4			
3			
2			
1	08/31/21	CONSTRUCTION	DRC
0	05/18/21	CONSTRUCTION	DRC
A	04/29/21	PRELIMINARY	DRC

LICENSER:

GEORGIA REGISTERED No. PE043908 PROFESSIONAL ENGINEER DAVID RAINEY COUSINS

10/12/21

KHA PROJECT NUMBER:

013509266

DRAWN BY: TDM

CHECKED BY: TRN

SHEET TITLE:

OVERALL SITE PLAN

SHEET NUMBER:

C1

This document, together with the concepts and designs presented herein, as an instrument of service, is intended only for the specific purpose and client for which it was prepared. Reuse of and improper reliance on this document without written authorization and adaptation by Kimley–Horn and Associates, Inc. shall be without liability to Kimley–Horn and Associates, Inc.

Copyright Kimley–Horn and Associates, Inc., 2021

NOTE:
EXISTING NATURAL VEGETATION TO BE MAINTAINED AS A BUFFER ALONG WESTERLY SIDE OF COMPOUND.

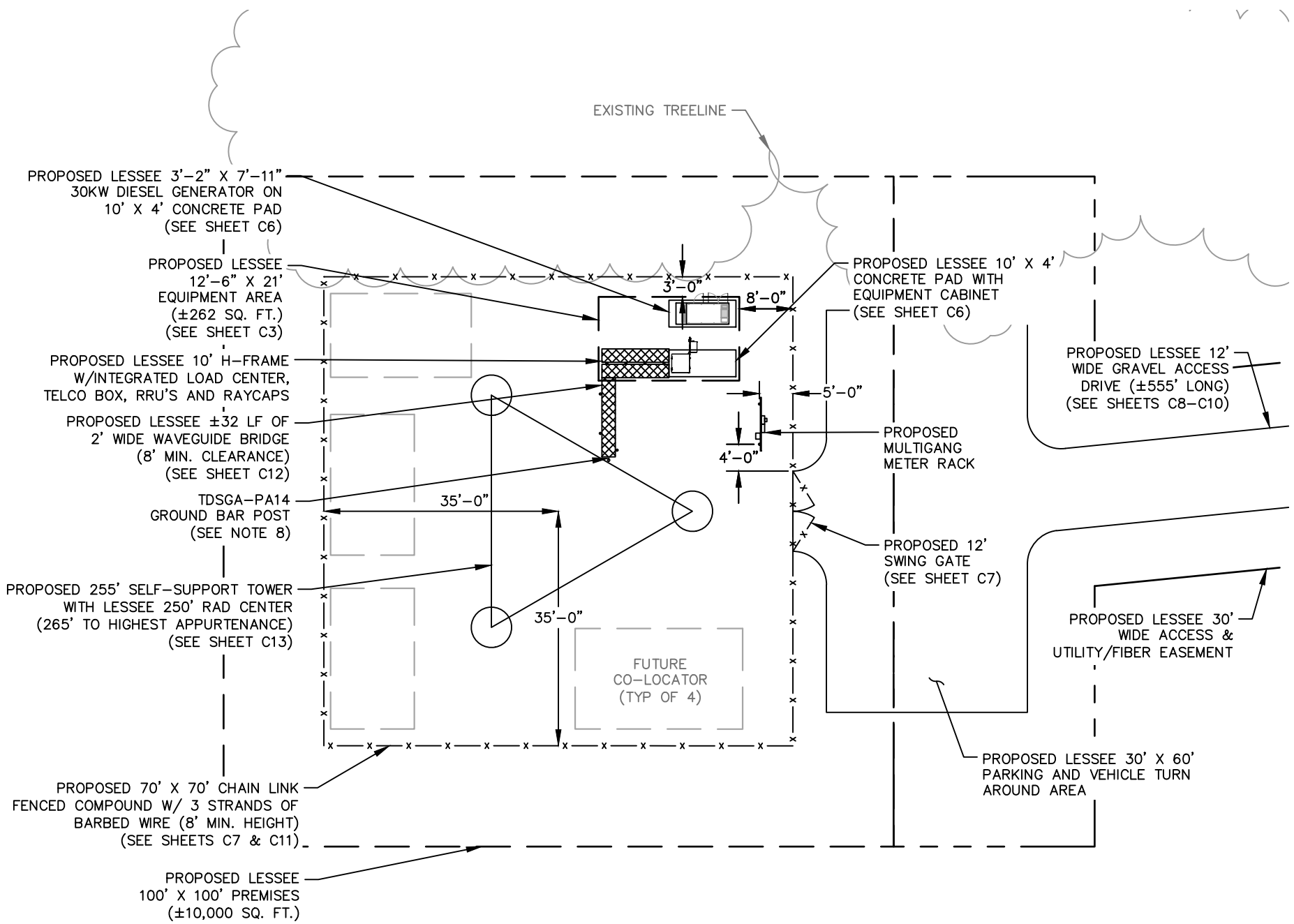

1 / C2 SITE PLAN
SCALE: 1" = 20'

SITE NOTES:

1. VERIZON WIRELESS STAFF SHALL COORDINATE WITH THE PROPERTY OWNER TO OBTAIN THE PROPER EASEMENT AGREEMENTS TO CONSTRUCT AND MAINTAIN EQUIPMENT IN AND AROUND THE TOWER COMPOUND.
2. PROPOSED COMPOUND LAYOUT BASED ON SURVEY PROVIDED BY THE LAND CONSULTANTS, LLC DATED 02/16/21 AND SITE VISIT ON 01/28/21.
3. CONTRACTOR TO CONFIRM WITH VERIZON CONSTRUCTION MANAGER THAT THE EQUIPMENT SHOWN HAS BEEN ORDERED/SCHEDULED FOR DELIVERY TO THIS SITE.
4. THE BASIS OF EQUIPMENT DESIGN INCLUDES ONE (1) RF CABINET, ONE (1) FUTURE BATTERY CABINET, AND ONE (1) FUTURE EXPANSION CABINET.
5. GENERAL CONTRACTOR SHALL BE RESPONSIBLE FOR COORDINATING AND MODIFYING SCOPE OF WORK TO ACCOMMODATE ANY CHANGES IN THE EXACT EQUIPMENT PROCURED BY VERIZON WIRELESS. COORDINATE ANY CHANGES WITH VERIZON WIRELESS CONSTRUCTION MANAGER.
6. ROUTE COAX/FIBER UP TOWER PER STRUCTURAL ANALYSIS BY TOWER OWNER.
7. TOWER DIMENSIONS SHOWN ON THIS PLAN ARE FOR TOWER CENTER LOCATION. CONTRACTOR TO OBTAIN COPY OF TOWER ERECTION DRAWINGS FROM VERIZON CONSTRUCTION MANAGER PRIOR TO DRILLING TOWER FOUNDATIONS. CASSIONS AND TOWER SHOWN ON THIS PLAN ARE ILLUSTRATIVE, SEE DESIGN DRAWING BY OTHERS. DO NOT SCALE.
8. INSTALL 3½" O.D. GALVANIZED STEEL POST FOR TDSGA–PA14 GROUND BAR. POST TO EXTEND 78" ABOVE GRADE AND SHALL BE EMBEDDED IN A 12"ø CONCRETE FOOTING A MINIMUM OF 36". FOOTING SHALL EXTEND A MINIMUM OF 42" BELOW GRADE.
9. PER SECTION OF 17.410.40. F. PROVISIONS FOR CO–LOCATION. 3. ALL NEW TOWER INSTALLATIONS OF OVER 150 FEET IN HEIGHT SHALL PROVIDE ANTENNA AND SUPPORT SPACE FOR AT LEAST FIVE (5) CARRIERS.

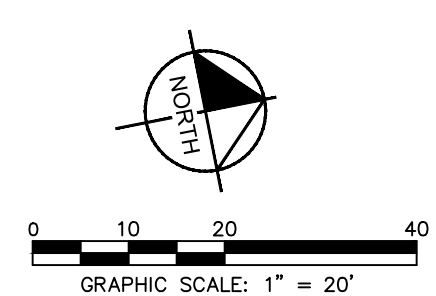

verizon
10300 OLD ALABAMA ROAD CONNECTOR
ALPHARETTA, GEORGIA 30022

PROJECT INFORMATION:

SITE NAME:
POND FORK
SITE No.: 581347
FUZE PROJECT #: 16350691
4410 HOLLY SPRINGS ROAD
GILLSVILLE, GA 30543
HALL COUNTY

PLANS PREPARED BY:

Kimley»Horn
11720 AMBER PARK DRIVE, SUITE 600
ALPHARETTA, GA 30009
PHONE: 770–619–4280
WWW.KIMLEY–HORN.COM

REV:	DATE:	ISSUED FOR:	BY:
7			
6			
5			
4			
3			
2			
1	08/31/21	CONSTRUCTION	DRC
0	05/18/21	CONSTRUCTION	DRC
A	04/29/21	PRELIMINARY	DRC

LICENSER:

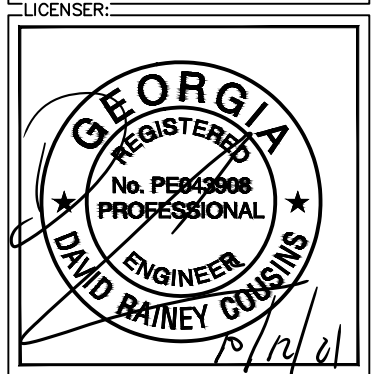

KHA PROJECT NUMBER:
013509266

DRAWN BY: TDM
CHECKED BY: TRN

SHEET TITLE:
SITE PLAN

SHEET NUMBER:
C2

K:\ATL_Wireless\000_Verizon\2020 Sites\Pond Fork A\CAD\CD\GA-GB.dwg ---- 10/12/21 8:41 AM by: Drew.Pitts

This document, together with the concepts and designs presented herein, as an instrument of service, is intended only for the specific purpose and client for which it was prepared. Reuse of and improper reliance on this document without written authorization and adaptation by Kimley–Horn and Associates, Inc. shall be without liability to Kimley–Horn and Associates, Inc.

Copyright Kimley–Horn and Associates, Inc., 2021

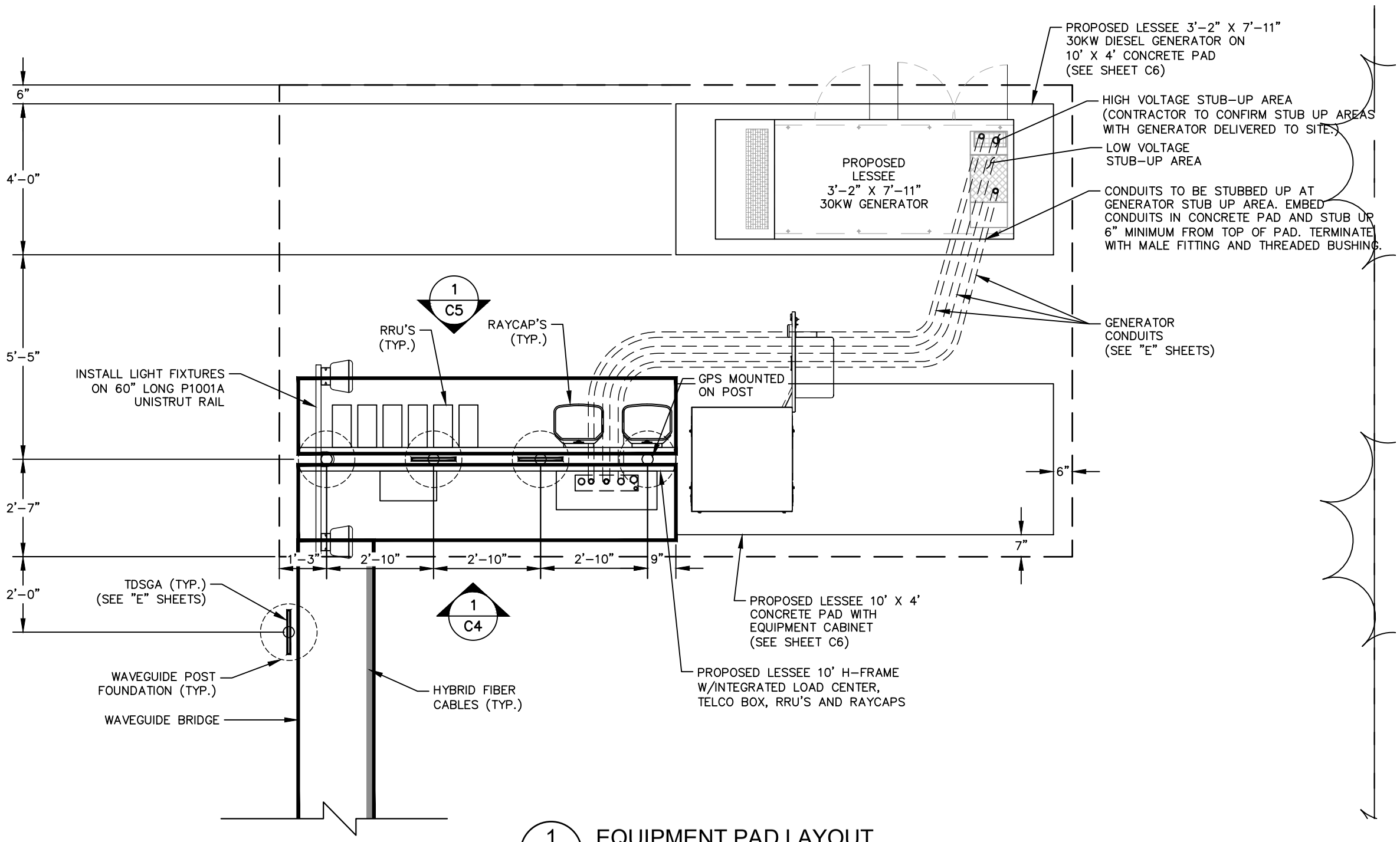

1 / C3 EQUIPMENT PAD LAYOUT

SCALE: 1" = 3'

EQUIPMENT PAD/ROUTING NOTES:

1. REFER TO THE SITE PLAN FOR EQUIPMENT PAD LOCATION AND ORIENTATION.
2. RUN 2" FLEX TELCO CONDUIT FROM BOTTOM OF TELCO BOX TO SIDE OF RF CABINET WITH CHASE NIPPLE THROUGH FACTORY KNOCKOUT.
3. RUN 2" FLEX POWER CONDUIT AND 1" FLEX ALARM CONDUIT FROM BOTTOM OF ILC TO SIDE OF RF CABINET WITH CHASE NIPPLES THROUGH FACTORY KNOCKOUTS.
4. RUN 2" FLEX FIBER CONDUIT FROM BOTTOM OF OVP TO SIDE OF RF CABINET WITH CHASE NIPPLE THROUGH FACTORY KNOCKOUT.
5. RUN (1) 1½" FLEX POWER CONDUIT FOR EVERY (6) RRU CIRCUITS FROM BOTTOM OF OVP TO SIDE OF RF CABINET WITH CHASE NIPPLE THROUGH FACTORY KNOCKOUT.
6. SUPPORT FLEX CONDUIT ON HORIZONTAL H-FRAME RAILS OR ON VERTICAL SITE STRUT SNT10 RAILS ADDED TO H-FRAME FOR CONDUIT/CABLE MANAGEMENT.
7. RUN HYBRID CABLE FOR TOWER MOUNTED RRU'S OVERHEAD ON TRAPEZE SUSPENDED FROM WAVE GUIDE BRIDGE. SWEEP DOWN ONTO H-FRAME RAILS, THEN LOOP UNDER OVP AND CONNECT TO BOTTOM OF OVP. ATTACH GROUND KITS TO HYBRID CABLE BEFORE LOOPING UNDER OVP, AND BOND TO TDSGA GROUND BAR AT BASE OF H-FRAME.
8. RUN COAX CABLE FOR GROUND MOUNTED RRU'S (IF USED) OVERHEAD ON TRAPEZE SUSPENDED FROM WAVE GUIDE BRIDGE. TERMINATE COAX ON ICE BRIDGE AND TRANSITION TO JUMPERS JUST BEFORE REACHING H-FRAME. ATTACH GROUND KITS TO COAX CABLE ON TOWER SIDE OF LAST ICE BRIDGE POST AND BOND TO TDSGA GROUND BAR NEAR TOP OF POST.
9. GPS ANTENNA TO BE MOUNTED TO STANDARD HEIGHT POST WITH EXTENDED MOUNTING PIPE, USING COMMSCOPE GPS-U MOUNTING KIT. MOUNT AS NEAR AS AS PRACTICAL TO RBA84 CABINET.
10. BOLT CABINETS AND GENERATOR TO SLAB USING FASTENERS SPECIFIED BY EQUIPMENT MANUFACTURER IN FACTORY PROVIDED MOUNTING HOLES.

NORTH

0 1.5 3 6

GRAPHIC SCALE: 1" = 3'

verizon

10300 OLD ALABAMA ROAD CONNECTOR
ALPHARETTA, GEORGIA 30022

PROJECT INFORMATION:

SITE NAME:
POND FORK
SITE No.: 581347
FUZE PROJECT #: 16350691
4410 HOLLY SPRINGS ROAD
GILLSVILLE, GA 30543
HALL COUNTY

PLANS PREPARED BY:

Kimley»Horn

11720 AMBER PARK DRIVE, SUITE 600
ALPHARETTA, GA 30009
PHONE: 770-619-4280
WWW.KIMLEY-HORN.COM

REV:	DATE:	ISSUED FOR:	BY:
7			
6			
5			
4			
3			
2			
1	08/31/21	CONSTRUCTION	DRC
0	05/18/21	CONSTRUCTION	DRC
A	04/29/21	PRELIMINARY	DRC

LICENSER:

GEORGIA REGISTERED No. PE043908 PROFESSIONAL ENGINEER DAVID RAINEY COUSINS

10/12/21

KHA PROJECT NUMBER:
013509266

DRAWN BY: TDM
CHECKED BY: TRN

SHEET TITLE:
EQUIPMENT PAD LAYOUT

SHEET NUMBER:
C3

K:\ATL_Wireless\000_Verizon\2020 Sites\Pond Fork A\CAD\CD\GA-GB.dwg ---- 10/12/21 8:41 AM by: Drew.Pitts

This document, together with the concepts and designs presented herein, as an instrument of service, is intended only for the specific purpose and client for which it was prepared. Reuse of and improper reliance on this document without written authorization and adaptation by Kimley-Horn and Associates, Inc. shall be without liability to Kimley-Horn and Associates, Inc.

Copyright Kimley-Horn and Associates, Inc., 2021

KEY NOTES - CONDUIT, CONDUCTORS, & MISC

- (A) GALVANIZED RIGID STEEL CAP, TYPICAL.
- (B) ICE BRIDGE, SEE CIVIL SHEETS FOR ADDITIONAL DETAILS.
- (C) 3" GALVANIZED RIGID STEEL PIPE, TYPICAL.
- (D) 1⅝" X 1⅝" GALVANIZED STEEL CHANNEL (UNISTRUT #P1000) WITH PLASTIC END CAP (UNISTRUT #P2860), TYPICAL.
- (E) 1" PVC CONDUIT FOR ROUTING POWER CONDUCTORS TO LIGHTS/DUPLEX OUTLET.
- (F) ONE (1) #2 AWG BARE SOLID TINNED COPPER BONDING CONDUCTOR (BC) FROM H-FRAME VERTICAL PIPE TO GROUND RING, EXOTHERMIC WELD BOTH ENDS.
- (G) 1" PVC CONDUIT FOR ROUTING GENERATOR CONTROL AND ALARM SIGNAL CABLES TO THE GENERATOR.
- (H) 2" PVC CONDUIT FOR ROUTING POWER CONDUCTORS TO THE GENERATOR.
- (J) 1" PVC CONDUIT FOR ROUTING POWER CONDUCTORS TO THE GENERATOR BATTERY CHARGER AND THE GENERATOR BLOCK HEATER.
- (K) 4" PVC TELCO CONDUIT, WITH TWO (2) PULL ROPES.
- (L) 2" FLEX CONDUIT FOR TELCO CABLES TO RF CABINET. REFER TO ROUTING NOTES ON EQUIPMENT PAD LAYOUT.
- (M) 2" PVC CONDUIT FOR ROUTING POWER CONDUCTORS TO RF CABINET. REFER TO ROUTING NOTES ON EQUIPMENT PAD LAYOUT.
- (N) 1" PVC CONDUIT FROM INTEGRATED LOAD CENTER (ILC) TO RF CABINET FOR ALARM SIGNAL CABLE. REFER TO ROUTING NOTES ON EQUIPMENT PAD LAYOUT.
- (P) ¾" PVC CONDUIT WITH ONE (1) – #2 AWG BARE TINNED COPPER GROUND LEAD FROM GROUNDING LUG IN ILC TO GROUND ROD, EXOTHERMIC WELD GEC TO GROUND ROD.
- (Q) 1" PVC CONDUIT FOR ROUTING POWER CONDUCTORS TO AREA LIGHTS.
- (R) GROUND RING (SEE "E" SHEETS).
- (S) GROUND ROD, EXOTHERMIC WELD TO GROUND RING (SEE "E" SHEETS).
- (T) CONCRETE FOUNDATION FOR H-FRAME VERTICAL PIPE. CONCRETE SHALL HAVE A 28 DAY COMPRESSIVE STRENGTH OF 4,000 PSI. AND INCLUDE FIBERMESH 650.
- (U) WB-K210-B15 HORSEHEAD SUPPORT BRACKET (SEE "WAVEGUIDE BRIDGE DETAILS" SHEET). THRU BOLTS REQUIRED FOR ATTACHMENT IN LIEU OF FACTORY PROVIDED U-BOLTS.
- (V) INSTALL LIGHT FIXTURES ON 60" LONG P1001A UNISTRUT RAIL (SEE "EQUIPMENT PAD LAYOUT" SHEET). ATTACH P1001A TO H-FRAME POST USING TWO (2) UB3 UNISTRUT CLAMPS. LIGHTS TO BE INSTALLED 7'-6" ABOVE GRADE.
- (W) 1" PVC CONDUIT FOR ROUTING POWER CONDUCTORS FROM THE ILC TO THE EMERGENCY GENERATOR STOP SWITCH.

KEY NOTES - ELECTRICAL EQUIPMENT

- (1) NEMA 3R ENCLOSURE TELCO BOX WITH REMOVABLE FRONT PANEL, PVC, (18" X 18" X 6" NOMINAL).
- (2) 20 AMP GFCI DUPLEX RECEPTACLE AND TIMER SWITCH, ENERLITES HET06 SERIES (OR APPROVED EQUIVALENT) IN LOCKABLE NEMA 3R ENCLOSURE, 2 GANG BOX WITH RED DOT 2CKPM-W COVER.
- (3) 200 AMP, 120/240 VOLT, INTEGRATED LOAD CENTER WITH 42 SPACE PANEL AND AUTOMATIC TRANSFER SWITCH (30" X 60" X 10" NOMINAL).
- (4) DIPLEXERS "AS NEEDED".
- (5) VERIZON RF CABINET-REAR VIEW.
- (6) EMERGENCY SHUTOFF SWITCH FOR GENERATOR MOUNTED ON 4' X 7' GALVANIZED J-BOX COVER PLATE.

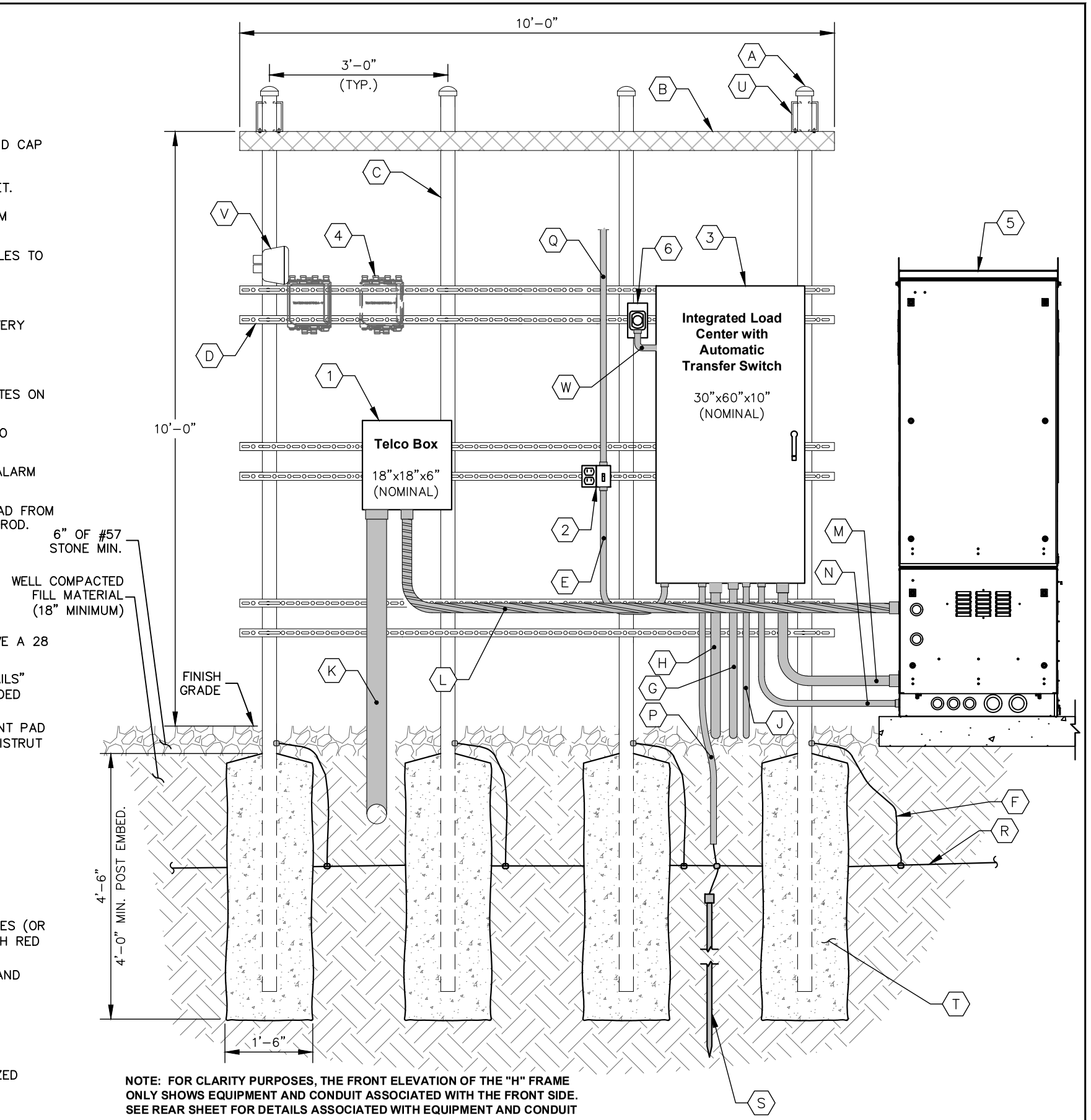

NOTE: FOR CLARITY PURPOSES, THE FRONT ELEVATION OF THE "H" FRAME ONLY SHOWS EQUIPMENT AND CONDUIT ASSOCIATED WITH THE FRONT SIDE. SEE REAR SHEET FOR DETAILS ASSOCIATED WITH EQUIPMENT AND CONDUIT MOUNTED ON THE REAR SIDE OF THE "H" FRAME.

1 / C4 EQUIPMENT RACK DETAILS - FRONT

NOT TO SCALE

verizon

10300 OLD ALABAMA ROAD CONNECTOR
ALPHARETTA, GEORGIA 30022

PROJECT INFORMATION:

SITE NAME:
POND FORK
SITE No.: 581347
FUZE PROJECT #: 16350691
4410 HOLLY SPRINGS ROAD
GILLSVILLE, GA 30543
HALL COUNTY

PLANS PREPARED BY:

Kimley»Horn

11720 AMBER PARK DRIVE, SUITE 600
ALPHARETTA, GA 30009
PHONE: 770-619-4280
WWW.KIMLEY-HORN.COM

REV:	DATE:	ISSUED FOR:	BY:
7			
6			
5			
4			
3			
2			
1	08/31/21	CONSTRUCTION	DRC
0	05/18/21	CONSTRUCTION	DRC
A	04/29/21	PRELIMINARY	DRC

LICENSER:

GEORGIA REGISTERED No. PE043908 PROFESSIONAL ENGINEER DAVID RAINEY COUSINS

10/12/21

KHA PROJECT NUMBER: 013509266

DRAWN BY: TDM CHECKED BY: TRN

SHEET TITLE: EQUIPMENT RACK DETAIL - FRONT

SHEET NUMBER: C4

K:\ATL_Wireless\000_Verizon\2020 Sites\Pond Fork A\CAD\CD\GA-GB.dwg ---- 10/12/21 8:42 AM by: Drew.Pitts

This document, together with the concepts and designs presented herein, as an instrument of service, is intended only for the specific purpose and client for which it was prepared. Reuse of and improper reliance on this document without written authorization and adaptation by Kimley-Horn and Associates, Inc. shall be without liability to Kimley-Horn and Associates, Inc.

Copyright Kimley-Horn and Associates, Inc., 2021

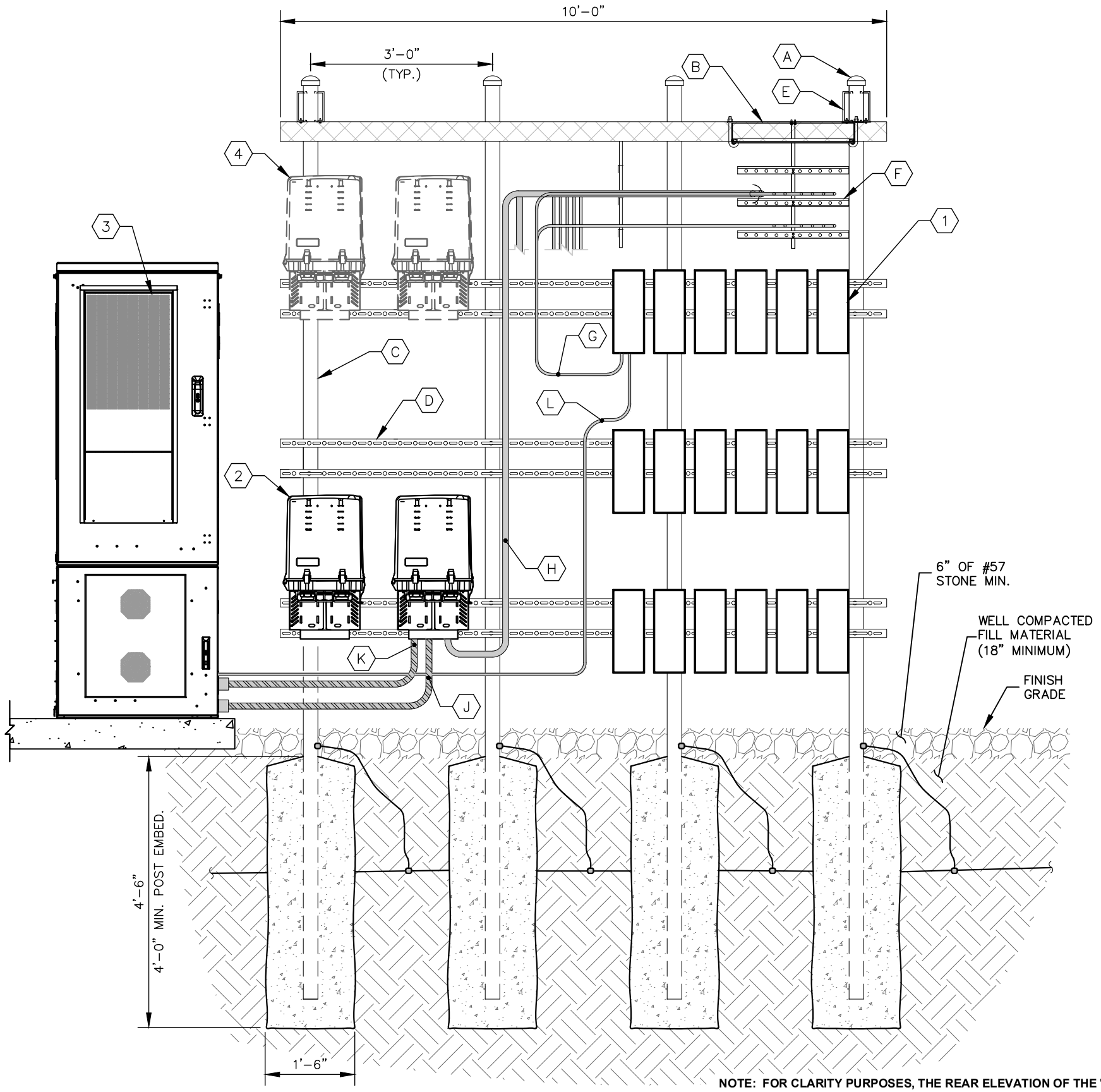

NOTE: FOR CLARITY PURPOSES, THE REAR ELEVATION OF THE "H" FRAME ONLY SHOWS EQUIPMENT AND CONDUIT ASSOCIATED WITH THE REAR SIDE. SEE FRONT SHEET FOR DETAILS ASSOCIATED WITH EQUIPMENT AND CONDUIT MOUNTED ON THE FRONT SIDE OF THE "H" FRAME.

1 / C5 EQUIPMENT RACK DETAILS - REAR

NOT TO SCALE

KEY NOTES - CONDUIT, CONDUCTORS, & MISC

- A GALVANIZED RIGID STEEL CAP, TYPICAL.
- B ICE BRIDGE, SEE CIVIL SHEETS FOR ADDITIONAL DETAILS.
- C 3" GALVANIZED RIGID STEEL PIPE, TYPICAL.
- D 1⅝" X 1⅝" GALVANIZED STEEL CHANNEL (UNISTRUT #P1000) WITH PLASTIC END CAP (UNISTRUT #P2860), TYPICAL.
- E WB-K210-B15 HORSEHEAD SUPPORT BRACKET (SEE "WAVEGUIDE BRIDGE DETAILS" SHEET). THRU BOLTS REQUIRED FOR ATTACHMENT IN LIEU OF FACTORY PROVIDED U-BOLTS.
- F ICE BRIDGE RUNNING TOWARDS TOWER (SEE "EQUIPMENT PAD LAYOUT" SHEET).
- G COAX JUMPER CABLES INTO BOTTOM OF RRU'S, TYPICAL.
- H HYBRID CABLES RUNNING INTO BOTTOM OF RAYCAPS, TYPICAL (SEE NOTE 7 ON "EQUIPMENT PAD LAYOUT" SHEET).
- J 1½" POWER FLEX CONDUIT RUNNING FROM BOTTOM OF RAYCAPS TO CABINET, TYPICAL (SEE "EQUIPMENT PAD LAYOUT" SHEET).
- K 2" FIBER FLEX CONDUIT RUNNING FROM BOTTOM OF RAYCAPS TO CABINET, TYPICAL (SEE "EQUIPMENT PAD LAYOUT" SHEET).
- L FIBER/POWER JUMPER TO RRU (TYP. FOR EACH RRU).

KEY NOTES - ELECTRICAL EQUIPMENT

- 1 VERIZON RF RRU'S (MODEL, QUANTITY OF, AND CONFIGURATION DETERMINED BY RF DESIGN).
- 2 VERIZON RAYCAPS (MODEL, QUANTITY OF, AND CONFIGURATION DETERMINED BY RF DESIGN).
- 3 VERIZON RF CABINET-FRONT VIEW.
- 4 FUTURE VERIZON RAYCAPS.

verizon
10300 OLD ALABAMA ROAD CONNECTOR
ALPHARETTA, GEORGIA 30022

PROJECT INFORMATION:

SITE NAME:
POND FORK
SITE No.: 581347
FUZE PROJECT #: 16350691
4410 HOLLY SPRINGS ROAD
GILLSVILLE, GA 30543
HALL COUNTY

PLANS PREPARED BY:

Kimley»Horn
11720 AMBER PARK DRIVE, SUITE 600
ALPHARETTA, GA 30009
PHONE: 770-619-4280
WWW.KIMLEY-HORN.COM

REV:	DATE:	ISSUED FOR:	BY:
7			
6			
5			
4			
3			
2			
1	08/31/21	CONSTRUCTION	DRC
0	05/18/21	CONSTRUCTION	DRC
A	04/29/21	PRELIMINARY	DRC

LICENSER:

GEORGIA REGISTERED No. PE043908 PROFESSIONAL ENGINEER DAVID RAINEY COUSINS

KHA PROJECT NUMBER: 013509266

DRAWN BY: TDM CHECKED BY: TRN

SHEET TITLE: EQUIPMENT RACK DETAIL - REAR

SHEET NUMBER: C5

K:\ATL_Wireless\000_Verizon\2020 Sites\Pond Fork A\CAD\CD\GA-GB.dwg ---- 10/12/21 8:42 AM by: Drew.Pitts

This document, together with the concepts and designs presented herein, as an instrument of service, is intended only for the specific purpose and client for which it was prepared. Reuse of and improper reliance on this document without written authorization and adaptation by Kimley-Horn and Associates, Inc. shall be without liability to Kimley-Horn and Associates, Inc.

Copyright Kimley-Horn and Associates, Inc., 2021

CONCRETE PAD SCHEDULE

PAD TYPE	"L"	"W"	"D"	REINFORCEMENT
EQUIPMENT PAD	10'-0"	4'-0"	6"	SEE DETAIL 2/C6
GENERATOR PAD	8'-0"	3'-6"	6"	SEE DETAIL 2/C6

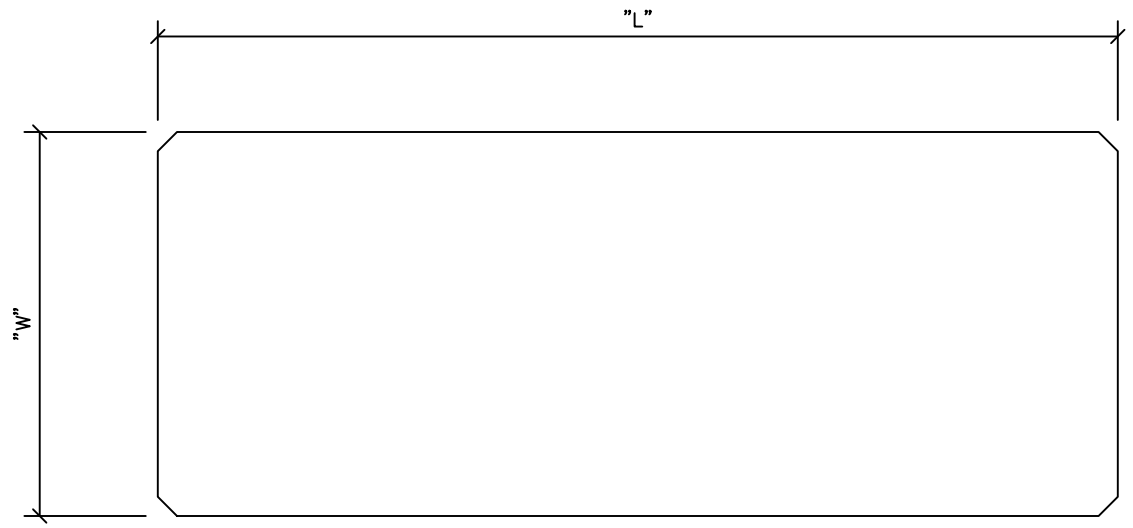

1 / C6 CONCRETE PAD PLAN

NOT TO SCALE

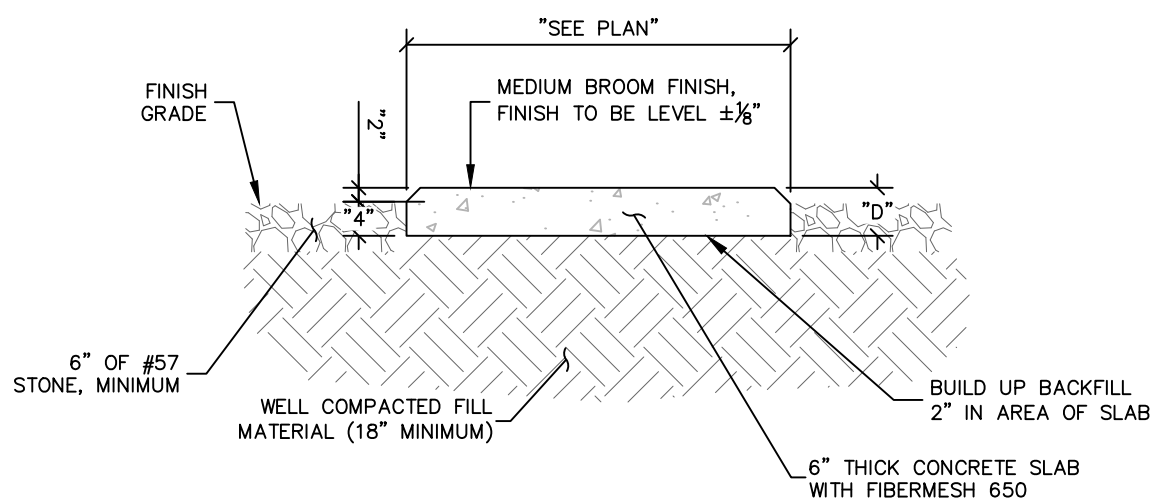

2 / C6 CONCRETE PAD FOUNDATION SECTION

NOT TO SCALE

verizon

10300 OLD ALABAMA ROAD CONNECTOR
ALPHARETTA, GEORGIA 30022

PROJECT INFORMATION:

SITE NAME:
POND FORK
SITE No.: 581347
FUZE PROJECT #: 16350691

4410 HOLLY SPRINGS ROAD
GILLSVILLE, GA 30543
HALL COUNTY

PLANS PREPARED BY:

Kimley»Horn

11720 AMBER PARK DRIVE, SUITE 600
ALPHARETTA, GA 30009
PHONE: 770-619-4280
WWW.KIMLEY-HORN.COM

REV:	DATE:	ISSUED FOR:	BY:
7			
6			
5			
4			
3			
2			
1	08/31/21	CONSTRUCTION	DRC
0	05/18/21	CONSTRUCTION	DRC
A	04/29/21	PRELIMINARY	DRC

LICENSER:

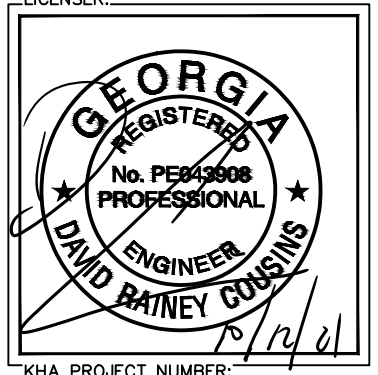

KHA PROJECT NUMBER:

013509266

DRAWN BY: TDM

CHECKED BY: TRN

SHEET TITLE:

CONCRETE PAD FOUNDATION DETAILS

SHEET NUMBER:

C6

K:\ATL_Wireless\000_Verizon\2020 Sites\Pond Fork A\CAD\CD\GA-GB.dwg ---- 10/12/21 8:43 AM by: Drew.Pitts

This document, together with the concepts and designs presented herein, as an instrument of service, is intended only for the specific purpose and client for which it was prepared. Reuse of and improper reliance on this document without written authorization and adaptation by Kimley-Horn and Associates, Inc. shall be without liability to Kimley-Horn and Associates, Inc.

Copyright Kimley-Horn and Associates, Inc., 2021

FENCE NOTES:

1. USE 3,000–PSI CONCRETE, FULLY CONSOLIDATED AROUND THE POST.
2. WHERE THE POST IS SET IN ROCK OR CONCRETE, CORE A HOLE 12" DEEP AND 1" LARGER IN DIAMETER THAN THE POST. SET THE POST AND GROUT IN PLACE USING NON–SHRINK GROUT.
3. ALL POSTS MUST BE PLUMB AND ALIGNED WITH ONE ANOTHER IN BOTH HORIZONTAL AND VERTICAL PLANES.
4. CORNERS AND GATEPOSTS FOR CHAIN LINK FENCES SHALL EXTEND ABOVE THE TOP STRAND OF BARBED WIRE TO PROVIDE TENSIONING FOR THE BARBED WIRE.
5. PROVIDE MIDRAILS AND BRACING AT ALL CORNER POSTS WHERE THE FENCE CHANGES DIRECTION BY MORE THAN 30 DEGREES.
6. THE GRADE OF THE SITE AND INSTALLATION OF THE FENCE SHALL PROVIDE FOR NO MORE THAN A 1" GAP BETWEEN THE BOTTOM OF THE FENCE MATERIAL AND FINISH GRADE.
7. CONTRACTOR SHALL PROVIDE HOLD OPEN DEVICES FOR ALL GATES AT THE SPECIFIED OPEN POSITIONS, DRIVEN PIPE TYPE RECEIVERS ARE NOT AUTHORIZED.
8. CONTRACTOR SHALL ALSO PROVIDE A MUSHROOM TYPE RECEIVER AT THE CLOSE POSITION.

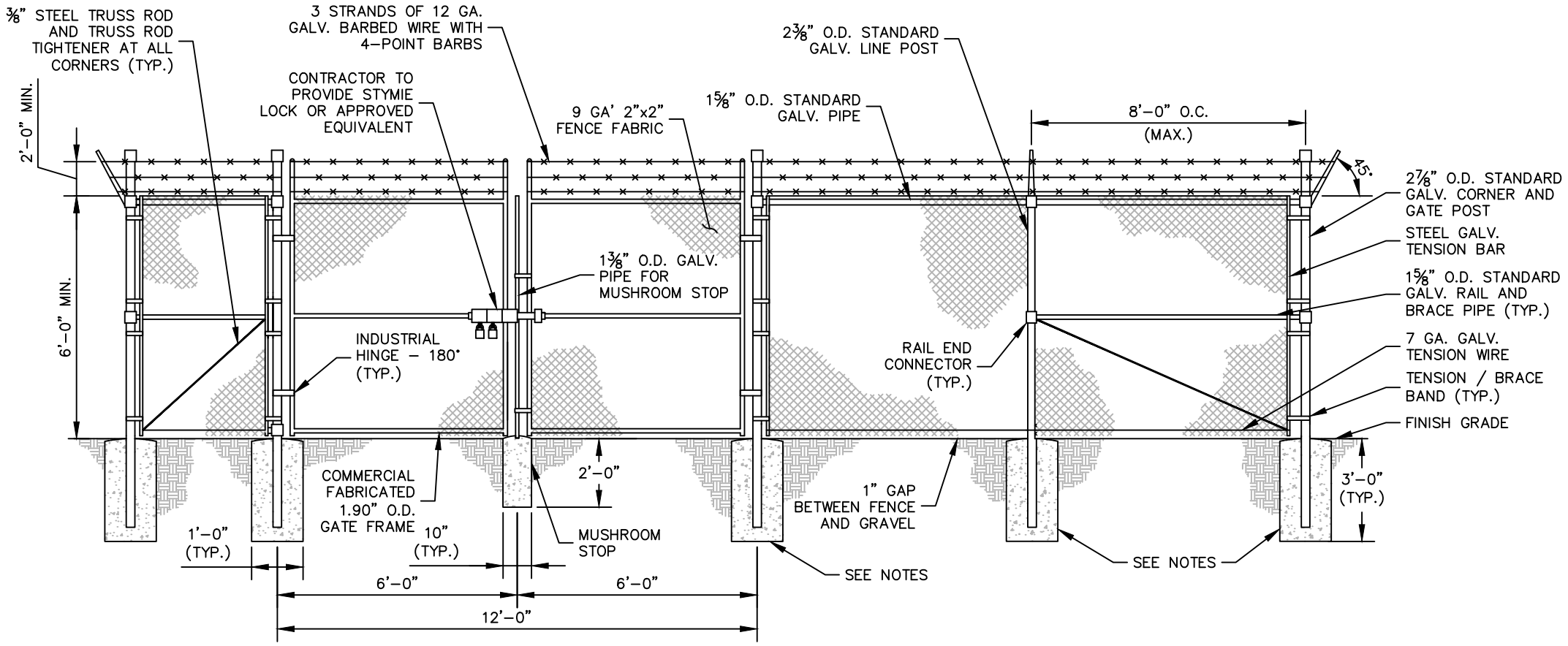

1 / C7 CHAIN LINK FENCE AND GATE ELEVATION

NOT TO SCALE

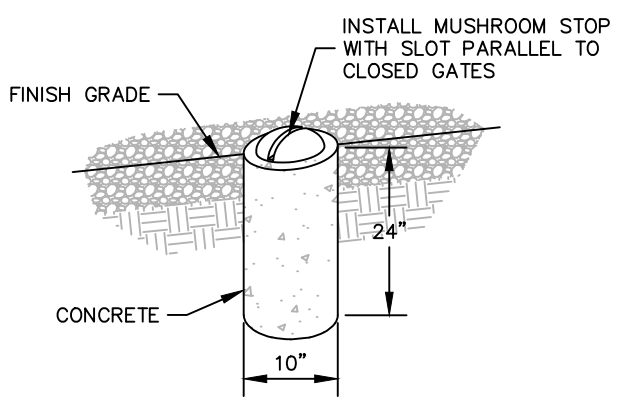

2 / C7 MUSHROOM STOP

NOT TO SCALE

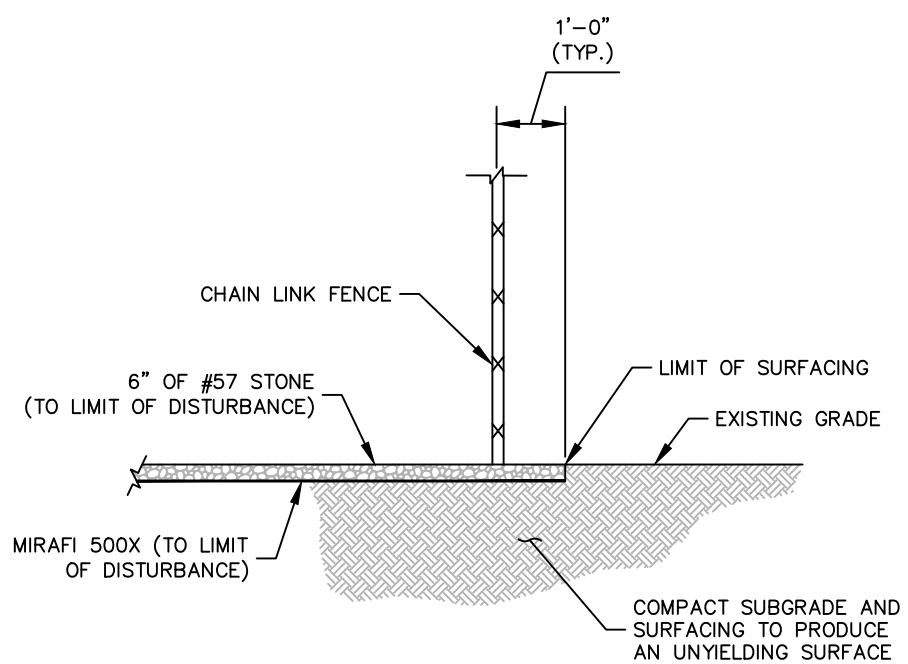

3 / C7 SITE COMPOUND SURFACE DETAIL

NOT TO SCALE

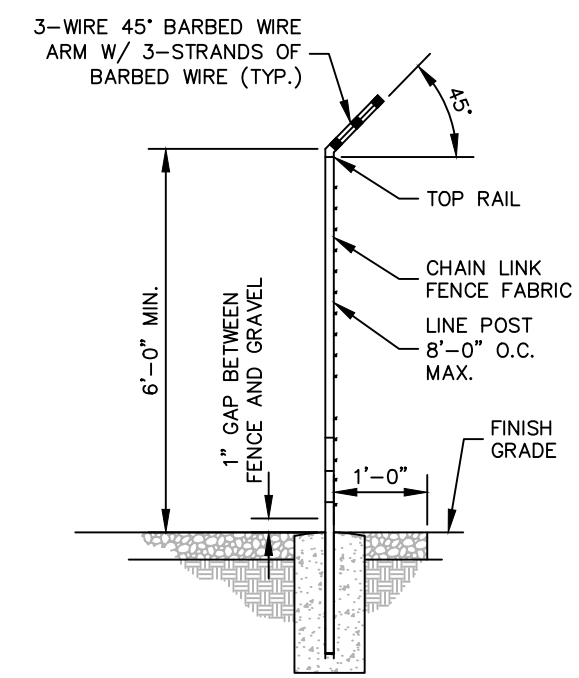

4 / C7 SECTION AT FENCE

NOT TO SCALE

verizon
10300 OLD ALABAMA ROAD CONNECTOR
ALPHARETTA, GEORGIA 30022

PROJECT INFORMATION:

SITE NAME:
POND FORK
SITE No.: 581347
FUZE PROJECT #: 16350691
4410 HOLLY SPRINGS ROAD
GILLSVILLE, GA 30543
HALL COUNTY

PLANS PREPARED BY:
Kimley»Horn
11720 AMBER PARK DRIVE, SUITE 600
ALPHARETTA, GA 30009
PHONE: 770–619–4280
WWW.KIMLEY–HORN.COM

REV:	DATE:	ISSUED FOR:	BY:
7			
6			
5			
4			
3			
2			
1	08/31/21	CONSTRUCTION	DRC
0	05/18/21	CONSTRUCTION	DRC
A	04/29/21	PRELIMINARY	DRC

LICENSER:

GEORGIA REGISTERED No. PE043908 PROFESSIONAL ENGINEER DAVID RAINEY COUSINS

10/12/21

KHA PROJECT NUMBER: 013509266

DRAWN BY: TDM CHECKED BY: TRN

SHEET TITLE: FENCE, GATE AND COMPOUND DETAILS

SHEET NUMBER: C7

K:\ATL_Wireless\000_Verizon\2020 Sites\Pond Fork A\CAD\CD\GA-GB.dwg ---- 10/12/21 8:43 AM by: Drew.Pitts

This document, together with the concepts and designs presented herein, as an instrument of service, is intended only for the specific purpose and client for which it was prepared. Reuse of and improper reliance on this document without written authorization and adaptation by Kimley–Horn and Associates, Inc. shall be without liability to Kimley–Horn and Associates, Inc.

Copyright Kimley–Horn and Associates, Inc., 2021

NOTE:
CURRENT DESIGN ANTICIPATES APPROXIMATELY 28,564± SQ. FT. (0.66 ACRES) OF CLEARING AND GRADING FOR THE PROPOSED PROJECT. IF ADDITIONAL CLEARING IS REQUIRED BEYOND WHAT IS SHOWN IN THE PLANS THE CONTRACTOR SHALL NOTIFY THE ENGINEER AND/OR PROJECT MANAGER.

GRADING NOTES:

1. THE CONTRACTOR SHALL CLEAR AND GRUB THE SITE AND PLACE, COMPACT, AND MOISTURE CONDITION ALL FILL PER THE PROJECT GEOTECHNICAL ENGINEERS SPECIFICATIONS. FILL MATERIAL SHALL BE APPROVED BY THE GEOTECHNICAL ENGINEER PRIOR TO PLACEMENT.
2. ALL PROPOSED CONTOURS AND SPOT ELEVATIONS REFLECT FINISHED GRADES.
3. CONTRACTOR SHALL BLEND EARTHWORK SMOOTHLY TO TRANSITION BACK TO EXISTING GRADE.
4. PORTIONS OF THE SITE NOT SPECIFICALLY MENTIONED WITHIN THE GEOTECHNICAL REPORT SHALL BE COMPACTED TO 95 PERCENT OF THE MATERIALS MAXIMUM DRY DENSITY WITHIN 3 PERCENT OF OPTIMUM MOISTURE CONTENT.
5. FILL SHALL BE PLACED IN MAXIMUM 8 INCH LOOSE LIFTS.
6. UNDISTURBED AREAS WITHIN 30' INGRESS/EGRESS EASEMENT NOT NEEDED FOR UTILITY ROUTING TO BE LEFT UNDISTURBED.
7. GROUND WATER SHOULD BE REASONABLY EXPECTED. ANY DE-WATERING OR MOISTURE CONDITIONING IS THE RESPONSIBILITY OF THE CONTRACTOR AND SHOULD BE INCLUDED IN THE CONTRACT PRICE.
8. SEED ALL DISTURBED AREAS NOT TOPPED WITH GRAVEL PER SEEDING SCHEDULE ON DETAIL ON SHEET C9.
9. MAXIMUM CUT SLOPE = 2H:1V UNLESS OTHERWISE NOTED.
10. MAXIMUM FILL SLOPE = 3H:1V UNLESS OTHERWISE NOTED.

LEGEND

EXISTING CONTOURS

PROPOSED CONTOURS

LOD/SILT FENCE — LOD

TPF — TPF — TPF

EXISTING SPOT ELEVATION x XXX

PROPOSED SPOT ELEVATION ● XXX

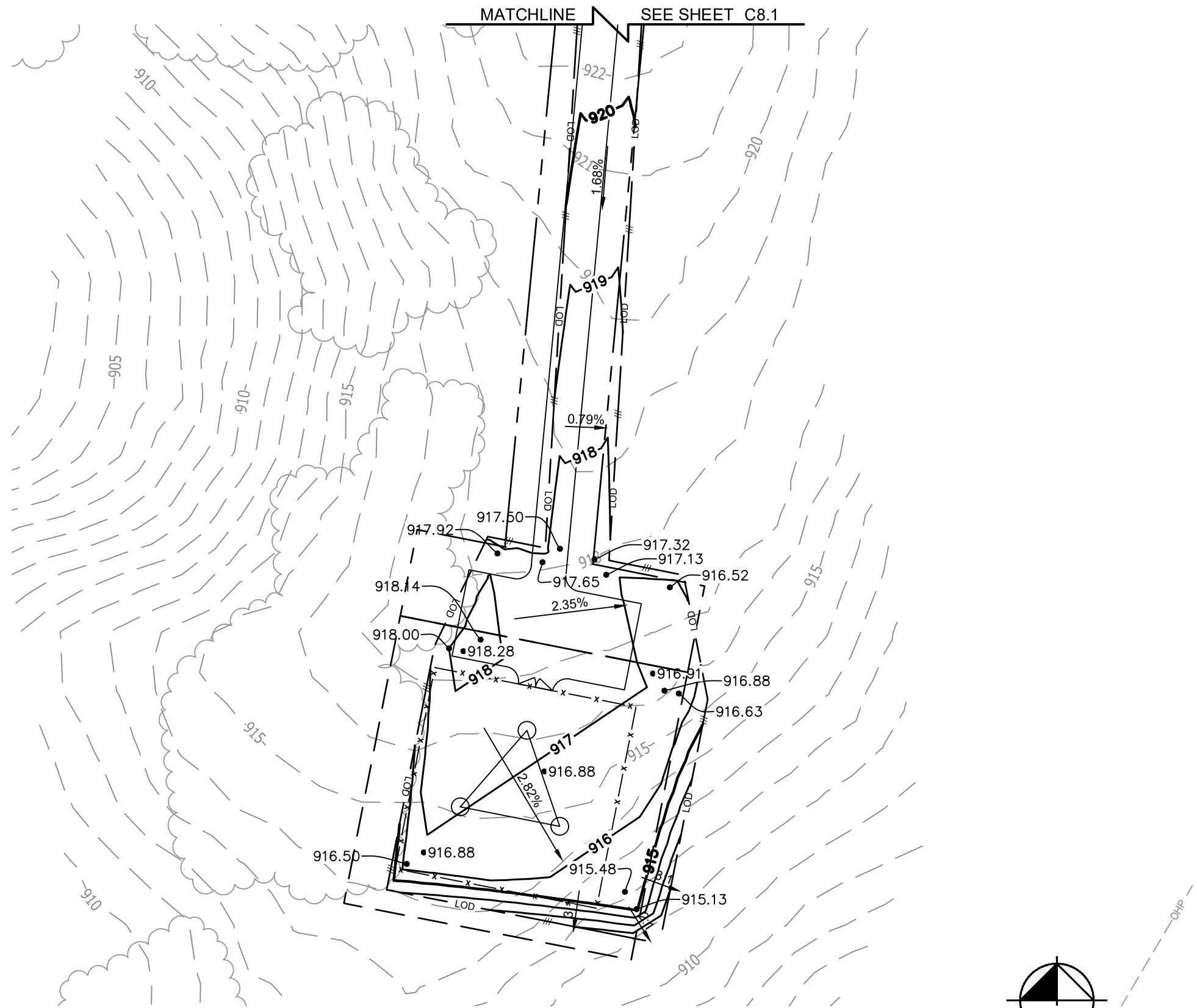

1 / C8 GRADING & EROSION CONTROL PLAN

SCALE: 1" = 40'

verizon

10300 OLD ALABAMA ROAD CONNECTOR
ALPHARETTA, GEORGIA 30022

PROJECT INFORMATION:

SITE NAME:
POND FORK
SITE No.: 581347
FUZE PROJECT #: 16350691
4410 HOLLY SPRINGS ROAD
GILLSVILLE, GA 30543
HALL COUNTY

PLANS PREPARED BY:

Kimley»Horn

11720 AMBER PARK DRIVE, SUITE 600
ALPHARETTA, GA 30009
PHONE: 770-619-4280
WWW.KIMLEY-HORN.COM

REV: DATE: ISSUED FOR: BY:

7			
6			
5			
4			
3			
2			
1	08/31/21	CONSTRUCTION	DRC
0	05/18/21	CONSTRUCTION	DRC
A	04/29/21	PRELIMINARY	DRC

LICENSER:

GEORGIA REGISTERED No. PE043908 PROFESSIONAL ENGINEER DAVID RAINEY COUSINS

8/12/21

KHA PROJECT NUMBER: 013509266

DRAWN BY: TDM CHECKED BY: TRN

SHEET TITLE: GRADING AND EROSION CONTROL PLAN

SHEET NUMBER: C8

K:\ATL_Wireless\000_Verizon\2020 Sites\Pond Fork A\CAD\CD\GA-GB.dwg ---- 10/12/21 8:43 AM by: Drew.Pitts

This document, together with the concepts and designs presented herein, as an instrument of service, is intended only for the specific purpose and client for which it was prepared. Reuse of and improper reliance on this document without written authorization and adaptation by Kimley-Horn and Associates, Inc. shall be without liability to Kimley-Horn and Associates, Inc.

Copyright Kimley-Horn and Associates, Inc., 2021

NOTE:
CURRENT DESIGN ANTICIPATES APPROXIMATELY 28,564± SQ. FT. (0.66 ACRES) OF CLEARING AND GRADING FOR THE PROPOSED PROJECT. IF ADDITIONAL CLEARING IS REQUIRED BEYOND WHAT IS SHOWN IN THE PLANS THE CONTRACTOR SHALL NOTIFY THE ENGINEER AND/OR PROJECT MANAGER.

GRADING NOTES:

1. THE CONTRACTOR SHALL CLEAR AND GRUB THE SITE AND PLACE, COMPACT, AND MOISTURE CONDITION ALL FILL PER THE PROJECT GEOTECHNICAL ENGINEERS SPECIFICATIONS. FILL MATERIAL SHALL BE APPROVED BY THE GEOTECHNICAL ENGINEER PRIOR TO PLACEMENT.
2. ALL PROPOSED CONTOURS AND SPOT ELEVATIONS REFLECT FINISHED GRADES.
3. CONTRACTOR SHALL BLEND EARTHWORK SMOOTHLY TO TRANSITION BACK TO EXISTING GRADE.
4. PORTIONS OF THE SITE NOT SPECIFICALLY MENTIONED WITHIN THE GEOTECHNICAL REPORT SHALL BE COMPACTED TO 95 PERCENT OF THE MATERIALS MAXIMUM DRY DENSITY WITHIN 3 PERCENT OF OPTIMUM MOISTURE CONTENT.
5. FILL SHALL BE PLACED IN MAXIMUM 8 INCH LOOSE LIFTS.
6. UNDISTURBED AREAS WITHIN 30' INGRESS/EGRESS EASEMENT NOT NEEDED FOR UTILITY ROUTING TO BE LEFT UNDISTURBED.
7. GROUND WATER SHOULD BE REASONABLY EXPECTED. ANY DE-WATERING OR MOISTURE CONDITIONING IS THE RESPONSIBILITY OF THE CONTRACTOR AND SHOULD BE INCLUDED IN THE CONTRACT PRICE.
8. SEED ALL DISTURBED AREAS NOT TOPPED WITH GRAVEL PER SEEDING SCHEDULE ON DETAIL ON SHEET C9.
9. MAXIMUM CUT SLOPE = 2H:1V UNLESS OTHERWISE NOTED.
10. MAXIMUM FILL SLOPE = 3H:1V UNLESS OTHERWISE NOTED.

LEGEND

EXISTING CONTOURS

PROPOSED CONTOURS

LOD/SILT FENCE — LOD

TPF — TPF — TPF

EXISTING SPOT ELEVATION x XXX

PROPOSED SPOT ELEVATION ● XXX

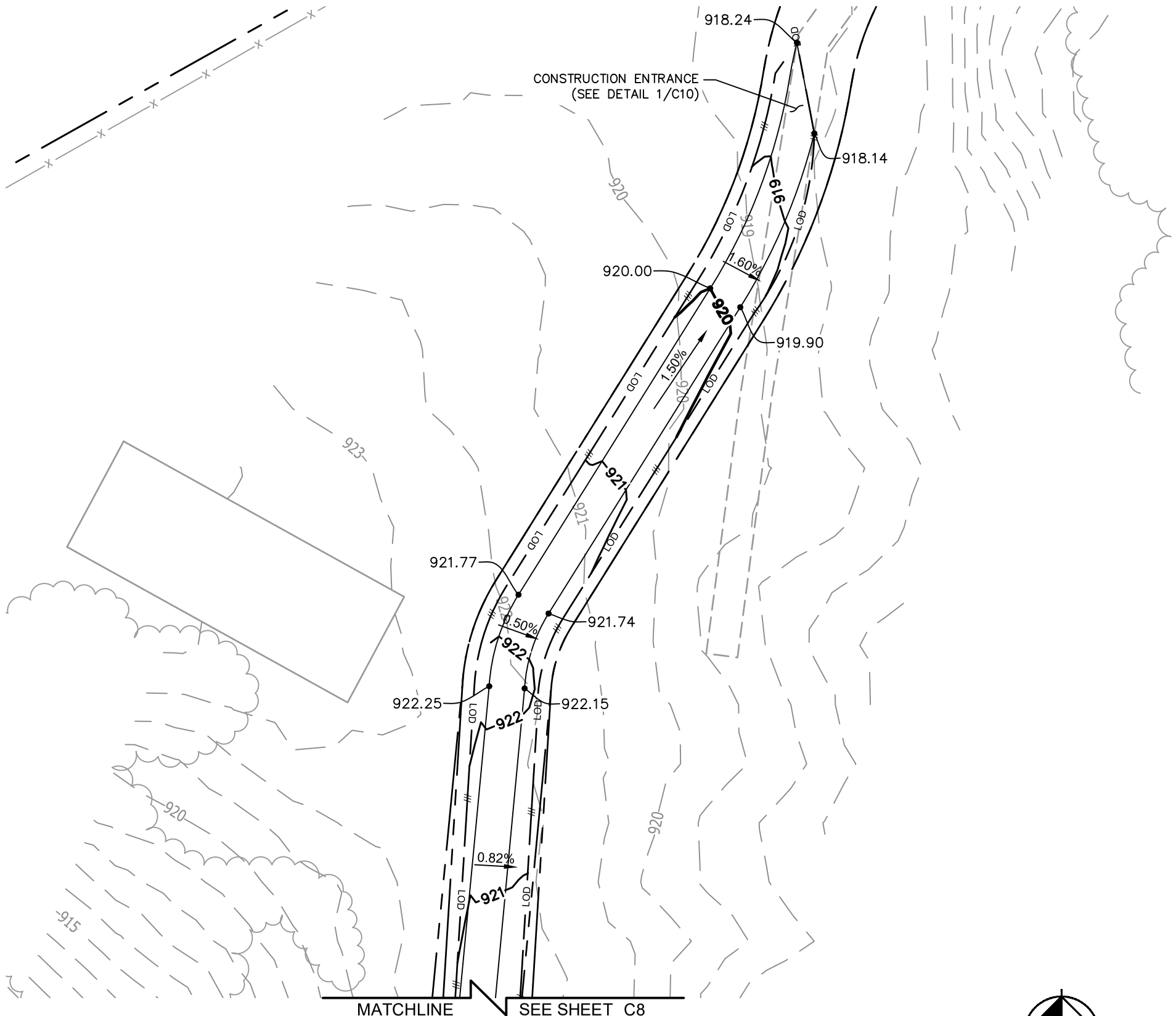

1 / C8.1 GRADING & EROSION CONTROL PLAN

SCALE: 1" = 40'

NORTH

0 20 40 80

GRAPHIC SCALE: 1" = 40'

verizon

10300 OLD ALABAMA ROAD CONNECTOR
ALPHARETTA, GEORGIA 30022

PROJECT INFORMATION:

SITE NAME:
POND FORK
SITE No.: 581347
FUZE PROJECT #: 16350691
4410 HOLLY SPRINGS ROAD
GILLSVILLE, GA 30543
HALL COUNTY

PLANS PREPARED BY:

Kimley»Horn

11720 AMBER PARK DRIVE, SUITE 600
ALPHARETTA, GA 30009
PHONE: 770-619-4280
WWW.KIMLEY-HORN.COM

REV:	DATE:	ISSUED FOR:	BY:
7			
6			
5			
4			
3			
2			
1	08/31/21	CONSTRUCTION	DRC
0	05/18/21	CONSTRUCTION	DRC
A	04/29/21	PRELIMINARY	DRC

LICENSER:

GEORGIA REGISTERED No. PE043908 PROFESSIONAL ENGINEER DAVID RAINEY COUSINS

10/12/21

KHA PROJECT NUMBER:
013509266

DRAWN BY: TDM
CHECKED BY: TRN

SHEET TITLE:
GRADING AND EROSION CONTROL PLAN

SHEET NUMBER:
C8.1

K:\ATL_Wireless\000_Verizon\2020 Sites\Pond Fork A\CAD\CD\GA-GB.dwg ---- 10/12/21 8:43 AM by: Drew.Pitts

This document, together with the concepts and designs presented herein, as an instrument of service, is intended only for the specific purpose and client for which it was prepared. Reuse of and improper reliance on this document without written authorization and adaptation by Kimley-Horn and Associates, Inc. shall be without liability to Kimley-Horn and Associates, Inc.

Copyright Kimley-Horn and Associates, Inc., 2021

NOTE:
CURRENT DESIGN ANTICIPATES APPROXIMATELY 28,564± SQ. FT. (0.66 ACRES) OF CLEARING AND GRADING FOR THE PROPOSED PROJECT. IF ADDITIONAL CLEARING IS REQUIRED BEYOND WHAT IS SHOWN IN THE PLANS THE CONTRACTOR SHALL NOTIFY THE ENGINEER AND/OR PROJECT MANAGER.

GRADING NOTES:

1. THE CONTRACTOR SHALL CLEAR AND GRUB THE SITE AND PLACE, COMPACT, AND MOISTURE CONDITION ALL FILL PER THE PROJECT GEOTECHNICAL ENGINEERS SPECIFICATIONS. FILL MATERIAL SHALL BE APPROVED BY THE GEOTECHNICAL ENGINEER PRIOR TO PLACEMENT.
2. ALL PROPOSED CONTOURS AND SPOT ELEVATIONS REFLECT FINISHED GRADES.
3. CONTRACTOR SHALL BLEND EARTHWORK SMOOTHLY TO TRANSITION BACK TO EXISTING GRADE.
4. PORTIONS OF THE SITE NOT SPECIFICALLY MENTIONED WITHIN THE GEOTECHNICAL REPORT SHALL BE COMPACTED TO 95 PERCENT OF THE MATERIALS MAXIMUM DRY DENSITY WITHIN 3 PERCENT OF OPTIMUM MOISTURE CONTENT.
5. FILL SHALL BE PLACED IN MAXIMUM 8 INCH LOOSE LIFTS.
6. UNDISTURBED AREAS WITHIN 30' INGRESS/EGRESS EASEMENT NOT NEEDED FOR UTILITY ROUTING TO BE LEFT UNDISTURBED.
7. GROUND WATER SHOULD BE REASONABLY EXPECTED. ANY DE-WATERING OR MOISTURE CONDITIONING IS THE RESPONSIBILITY OF THE CONTRACTOR AND SHOULD BE INCLUDED IN THE CONTRACT PRICE.
8. SEED ALL DISTURBED AREAS NOT TOPPED WITH GRAVEL PER SEEDING SCHEDULE ON DETAIL ON SHEET C9.
9. MAXIMUM CUT SLOPE = 2H:1V UNLESS OTHERWISE NOTED.
10. MAXIMUM FILL SLOPE = 3H:1V UNLESS OTHERWISE NOTED.

LEGEND

EXISTING CONTOURS

PROPOSED CONTOURS

LOD/SILT FENCE — LOD —

TPF — TPF — TPF —

EXISTING SPOT ELEVATION x XXX

PROPOSED SPOT ELEVATION ● XXX

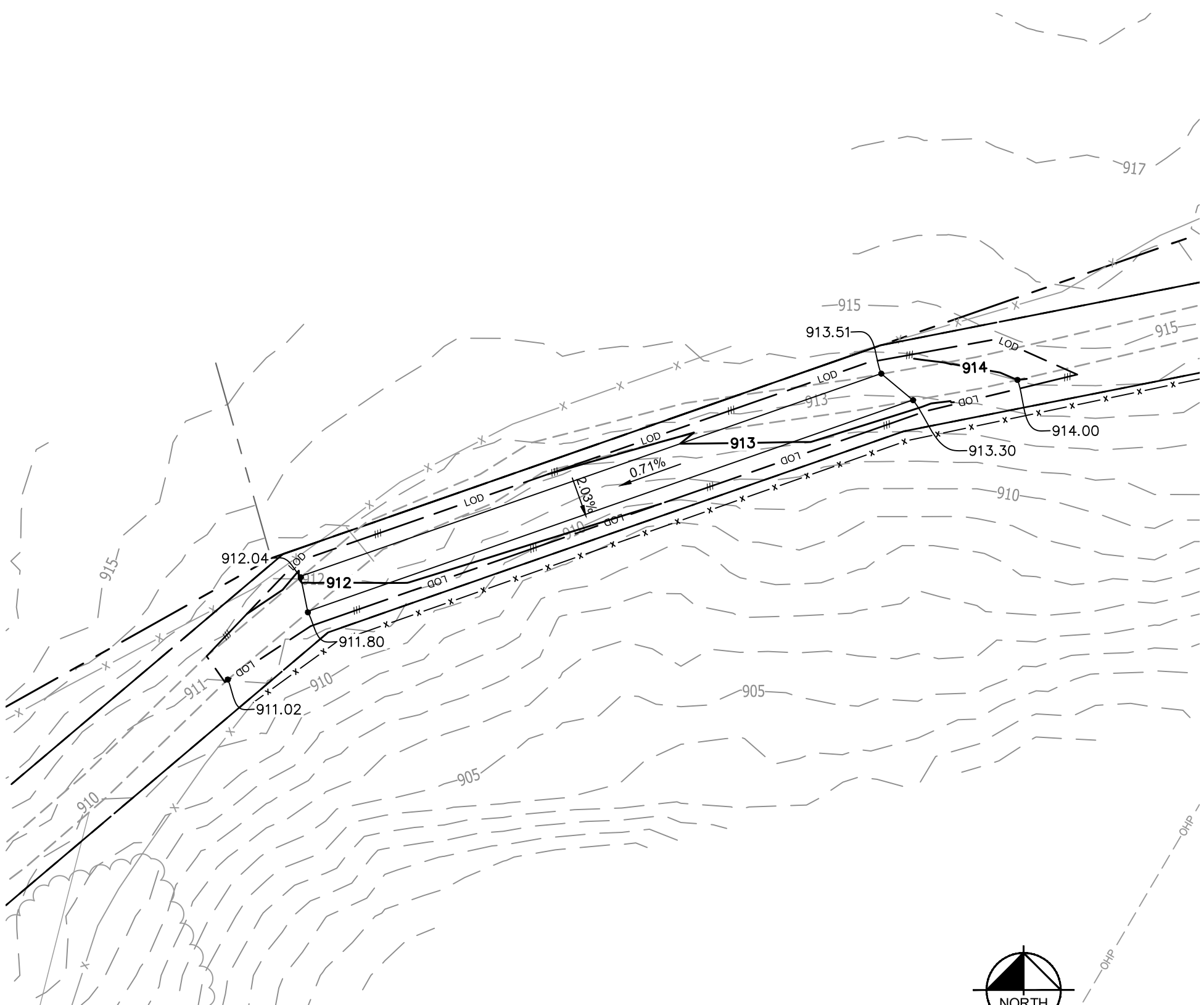

1 / C8.2 GRADING & EROSION CONTROL PLAN

SCALE: 1" = 40'

NORTH

0 20 40 80

GRAPHIC SCALE: 1" = 40'

verizon

10300 OLD ALABAMA ROAD CONNECTOR
ALPHARETTA, GEORGIA 30022

PROJECT INFORMATION:

SITE NAME:
POND FORK
SITE No.: 581347
FUZE PROJECT #: 16350691
4410 HOLLY SPRINGS ROAD
GILLSVILLE, GA 30543
HALL COUNTY

PLANS PREPARED BY:

Kimley»Horn

11720 AMBER PARK DRIVE, SUITE 600
ALPHARETTA, GA 30009
PHONE: 770-619-4280
WWW.KIMLEY-HORN.COM

REV:	DATE:	ISSUED FOR:	BY:
7			
6			
5			
4			
3			
2			
1	08/31/21	CONSTRUCTION	DRC
0	05/18/21	CONSTRUCTION	DRC
A	04/29/21	PRELIMINARY	DRC

LICENSER:

GEORGIA REGISTERED No. PE043908 PROFESSIONAL ENGINEER DAVID RAINEY COUSINS

8/12/21

KHA PROJECT NUMBER: 013509266

DRAWN BY: TDM CHECKED BY: TRN

SHEET TITLE: GRADING AND EROSION CONTROL PLAN

SHEET NUMBER: C8.2

K:\ATL_Wireless\000_Verizon\2020 Sites\Pond Fork A\CAD\CD\GA-GB.dwg ---- 10/12/21 8:43 AM by: Drew.Pitts

This document, together with the concepts and designs presented herein, as an instrument of service, is intended only for the specific purpose and client for which it was prepared. Reuse of and improper reliance on this document without written authorization and adaptation by Kimley-Horn and Associates, Inc. shall be without liability to Kimley-Horn and Associates, Inc.

Copyright Kimley-Horn and Associates, Inc., 2021

EROSION CONTROL NOTES:

1. EROSION CONTROLS SHALL BE INSTALLED PRIOR TO CONSTRUCTION AND SHALL BE ADEQUATE TO MAINTAIN SEDIMENT ON SITE.
2. ALL EXCAVATED SOILS NOT NEEDED ON SITE FOR BACKFILL OPERATIONS SHALL BECOME PROPERTY OF THE CONTRACTOR AND SHALL BE TAKEN OFF SITE AND LEGALLY DISPOSED OF.
3. SOIL REMAINING ON SITE SHALL HAVE SILT FENCE TIGHTLY PLACED AROUND THE ENTIRE CIRCUMFERENCE OF THE PILE.
4. PROVIDE EROSION CONTROLS AS NECESSARY TO PREVENT EXISTING SOILS FROM DRAINING OFF SITE OR INTO EXISTING DRAINAGE STRUCTURES.
5. ERECTION OF EROSION CONTROLS SHALL BE IN ACCORDANCE WITH STATE AND LOCAL EROSION CONTROL REGULATIONS.

SEEDING SCHEDULE FOR WINTER / SPRING CONSTRUCTION ACTIVITIES

SEEDING MIXTURE

Species	Rate (lb/acre)
Rye (grain)	120
Annual lespedeza (Kobe in Piedmont and Coastal Plain, Korean in Mountains)	50

Omit annual lespedeza when duration of temporary cover is not to extend beyond June.

SEEDING DATES

Mountains-- Above 2500 ft: Feb 15 – May 15
Below 2500 ft.: feb. 1 – May 1
Piedmont--Jan. 1 – May 1
Coastal Plain--Dec. 1 – Apr. 15

SOIL AMENDMENTS

Follow recommendations of soil tests or apply 2,000 lb/acre ground agricultural limestone and 750 lb/acre 10–10–10 fertilizer.

MULCH

Apply 4,000 lb/acre straw. Anchor straw by tacking with asphalt, netting, or a mulch anchoring tool. A disk with blades set nearly straight can be used as a mulch anchoring tool.

MAINTENANCE

Refertilize if growth is not fully adequate. Reseed, refertilize and mulch immediately following erosion or other damage.

SEEDING SCHEDULE FOR SUMMER CONSTRUCTION ACTIVITIES

SEEDING MIXTURE

Species	Rate (lb/acre)
Common Bermudagrass	40–80 (1–2 lb/1,000 sq. ft.)

SEEDING DATES

Coastal Plain--Apr. 1 – July
Piedmont--Apr. 15 – June 30

SOIL AMENDMENTS

Apply lime and fertilizer according to soil tests, or apply 3,000 lb/acre ground agricultural limestone and 500 lb/acre 10–10–10 fertilizer.

MULCH

Use jute, excelsior matting, or other effective channel lining material to cover the bottom of channels and ditches. The lining should extend above the highest calculated depth of flow. On channel side slopes above this height, and in drainages not requiring temporary lining, apply 4,000 lb/acre grain straw and anchor straw by stapling netting over the top.

MAINTENANCE

A minimum of 3 weeks is required for establishment. Inspect and repair mulch frequently. Refertilize the following Apr. with 50 lb/acre nitrogen.

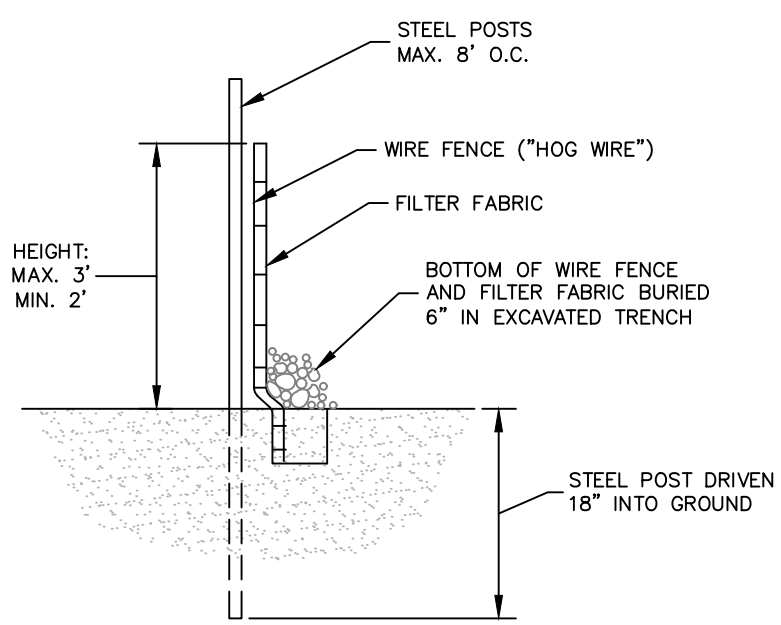

SECTION

1 / C9 SEDIMENT FENCE (SILT FENCE)

NOT TO SCALE

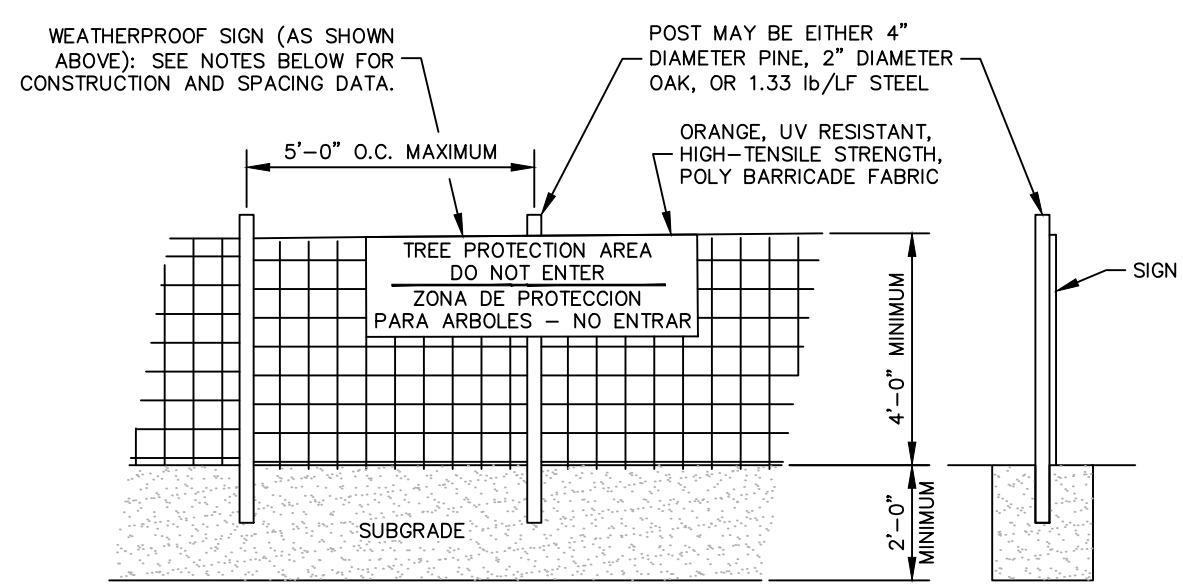

NOTES
INSTALL TREE PROTECTION FENCE AND SIGNAGE PRIOR TO CALLING FOR SITE INSPECTION. MAINTAIN TREE PROTECTION FENCE THROUGHOUT DURATION OF PROJECT. ADDITIONAL SIGNS MAY BE REQUIRED BASED ON ACTUAL FIELD CONDITIONS.

2 / C9 TREE PROTECTION FENCE

NOT TO SCALE

verizon
10300 OLD ALABAMA ROAD CONNECTOR
ALPHARETTA, GEORGIA 30022

PROJECT INFORMATION:
SITE NAME:
POND FORK
SITE No.: 581347
FUZE PROJECT #: 16350691
4410 HOLLY SPRINGS ROAD
GILLSVILLE, GA 30543
HALL COUNTY

PLANS PREPARED BY:
Kimley»Horn
11720 AMBER PARK DRIVE, SUITE 600
ALPHARETTA, GA 30009
PHONE: 770–619–4280
WWW.KIMLEY–HORN.COM

REV:	DATE:	ISSUED FOR:	BY:
7			
6			
5			
4			
3			
2			
1	08/31/21	CONSTRUCTION	DRC
0	05/18/21	CONSTRUCTION	DRC
A	04/29/21	PRELIMINARY	DRC

LICENSER:
GEORGIA REGISTERED No. PE043908 PROFESSIONAL ENGINEER DAVID RAINEY COUSINS
10/12/21

KHA PROJECT NUMBER:
013509266

DRAWN BY: TDM
CHECKED BY: TRN

SHEET TITLE:
GRADING AND EROSION CONTROL DETAILS

SHEET NUMBER:
C9

K:\ATL_Wireless\000_Verizon\2020 Sites\Pond Fork A\CAD\CD\GA-GB.dwg ---- 10/12/21 8:44 AM by: Drew.Pitts

This document, together with the concepts and designs presented herein, as an instrument of service, is intended only for the specific purpose and client for which it was prepared. Reuse of and improper reliance on this document without written authorization and adaptation by Kimley–Horn and Associates, Inc. shall be without liability to Kimley–Horn and Associates, Inc.

Copyright Kimley–Horn and Associates, Inc., 2021

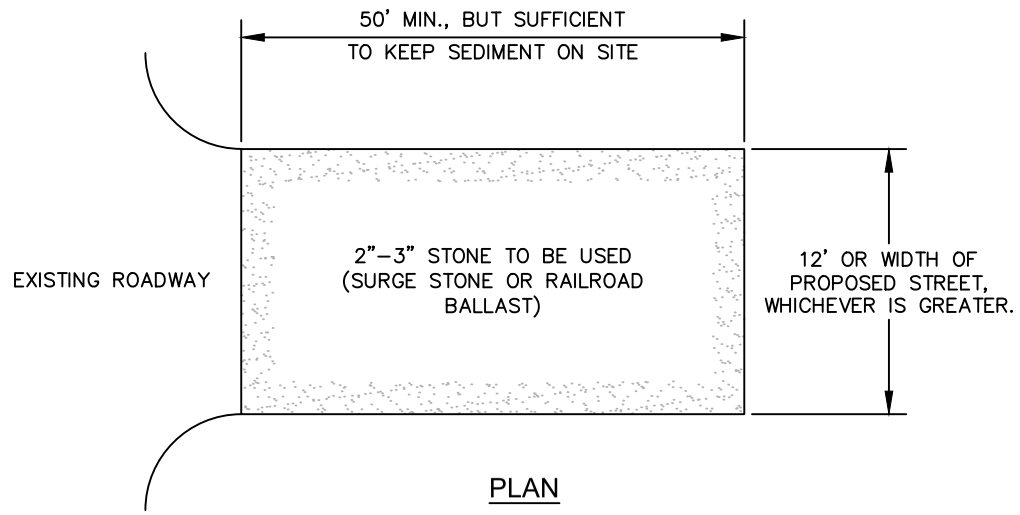

PLAN

NOTES:

1. PUT SILT FENCE OR TREE PROTECTION FENCE UP TO ENSURE CONSTRUCTION ENTRANCE IS USED.
2. IF CONSTRUCTION ON THE SITES ARE SUCH THAT THE MUD IS NOT REMOVED BY THE VEHICLE TRAVELING OVER THE STONE, THEN THE TIRES OF THE VEHICLES MUST BE WASHED BEFORE ENTERING THE PUBLIC ROAD.
3. IF A PROJECT CONTINUES TO PULL MUD AND DEBRIS ON TO THE PUBLIC ROAD, THE GOVERNING AUTHORITY WILL CLEAN THE AREA AND INVOICE THE FINANCIALLY RESPONSIBLE PERSON AS INDICATED ON THE FINANCIAL RESPONSIBILITY FORM.

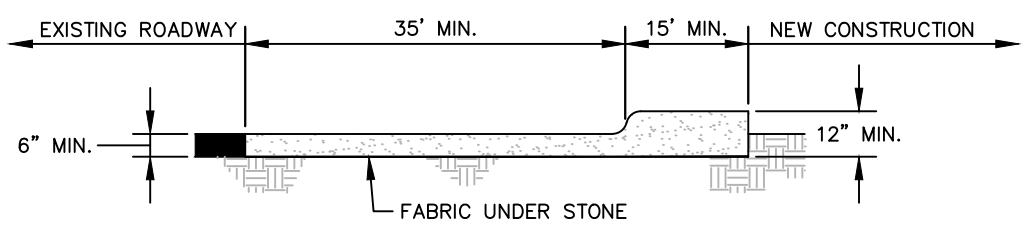

CROSS SECTION

1 / C10 CONSTRUCTION ENTRANCE

NOT TO SCALE

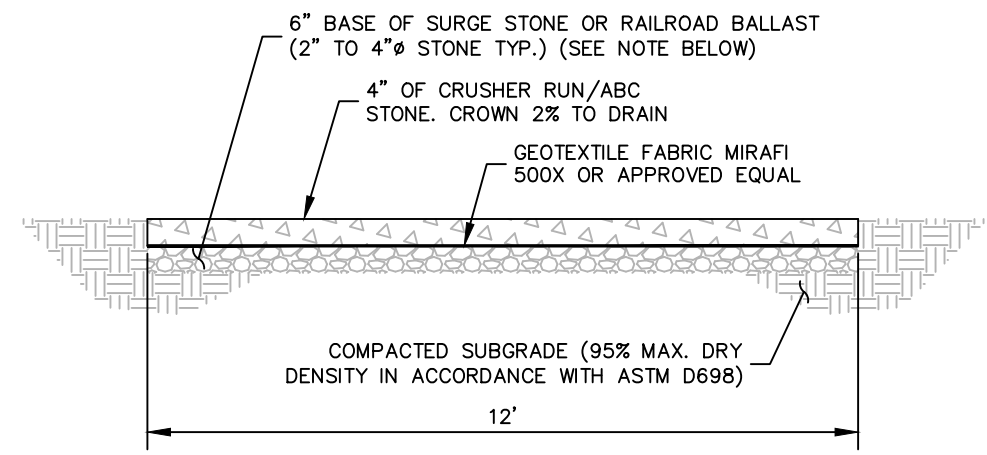

NOTE:
IF DETERMINED NECESSARY DURING GRADING AND CONSTRUCTION OF THE ACCESS ROAD BY THE VERIZON WIRELESS PROJECT MANAGER, THE CONTRACTOR SHALL INSTALL 6" BASE OF SURGE STONE OR RAILROAD BALLAST (2" TO 4"ø STONE TYP.)

2 / C10 STANDARD ACCESS ROAD AND TURN-AROUND DETAIL

NOT TO SCALE

verizon
10300 OLD ALABAMA ROAD CONNECTOR
ALPHARETTA, GEORGIA 30022

PROJECT INFORMATION:

SITE NAME:
POND FORK
SITE No.: 581347
FUZE PROJECT #: 16350691
4410 HOLLY SPRINGS ROAD
GILLSVILLE, GA 30543
HALL COUNTY

PLANS PREPARED BY:

Kimley»Horn
11720 AMBER PARK DRIVE, SUITE 600
ALPHARETTA, GA 30009
PHONE: 770-619-4280
WWW.KIMLEY-HORN.COM

REV:	DATE:	ISSUED FOR:	BY:
7			
6			
5			
4			
3			
2			
1	08/31/21	CONSTRUCTION	DRC
0	05/18/21	CONSTRUCTION	DRC
A	04/29/21	PRELIMINARY	DRC

LICENSER:

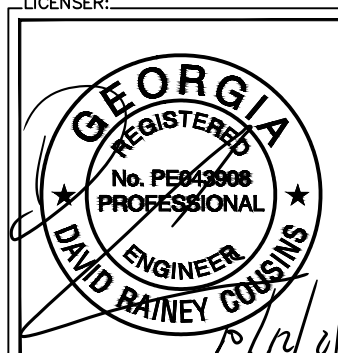

10/12/21

KHA PROJECT NUMBER:
013509266

DRAWN BY: TDM
CHECKED BY: TRN

SHEET TITLE:
ACCESS ROAD DETAILS

SHEET NUMBER:
C10

K:\ATL_Wireless\000_Verizon\2020 Sites\Pond Fork A\CAD\CD\GA-GB.dwg ---- 10/12/21 8:44 AM by: Drew.Pitts

This document, together with the concepts and designs presented herein, as an instrument of service, is intended only for the specific purpose and client for which it was prepared. Reuse of and improper reliance on this document without written authorization and adaptation by Kimley-Horn and Associates, Inc. shall be without liability to Kimley-Horn and Associates, Inc.

Copyright Kimley-Horn and Associates, Inc., 2021

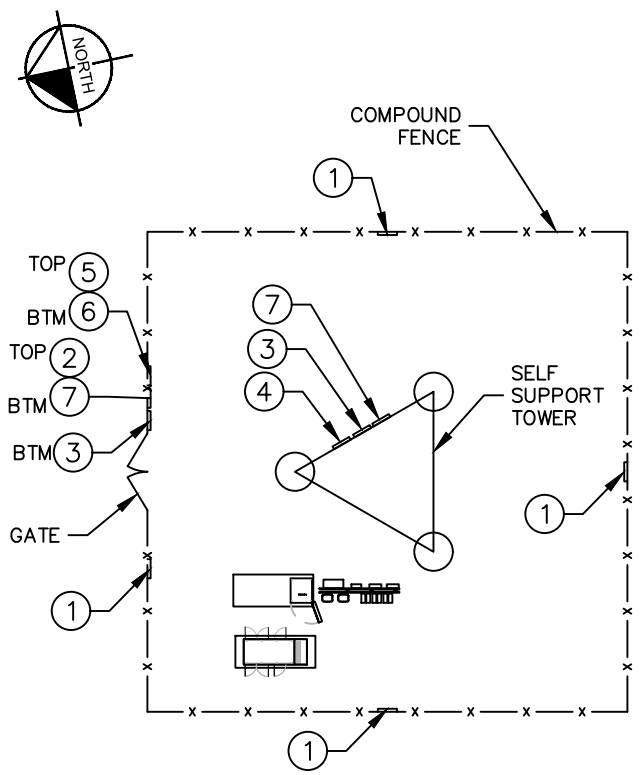

NOTE: SEE TYPICAL SIGNS AND SPECIFICATIONS DETAIL ON THIS SHEET FOR SIGN DESIGNATIONS.

1 / C11 SIGN PLACEMENT PLAN VIEW

NOT TO SCALE

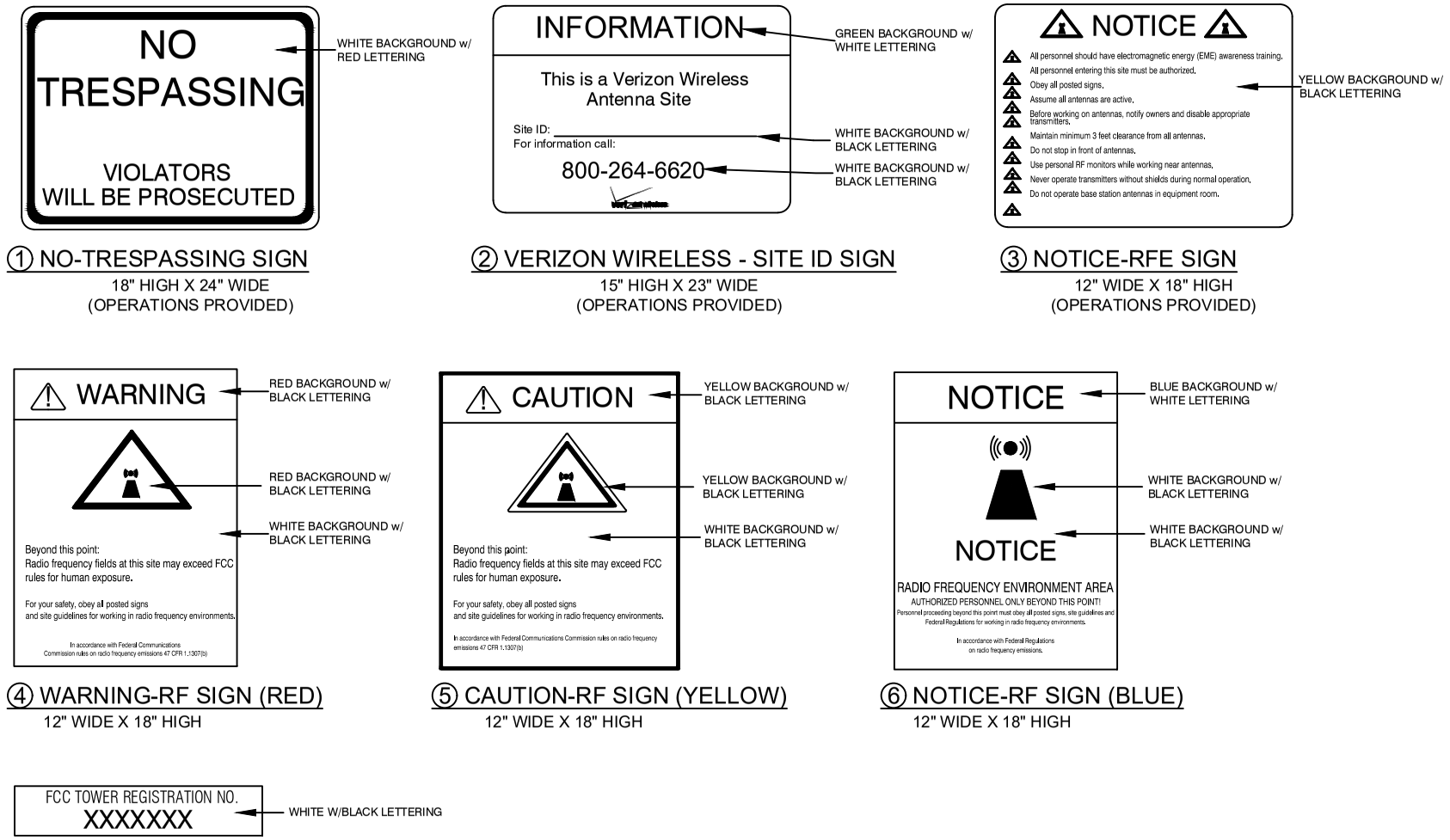

① NO-TRESPASSING SIGN
18" HIGH X 24" WIDE
(OPERATIONS PROVIDED)

② VERIZON WIRELESS - SITE ID SIGN
15" HIGH X 23" WIDE
(OPERATIONS PROVIDED)

③ NOTICE-RFE SIGN
12" WIDE X 18" HIGH
(OPERATIONS PROVIDED)

④ WARNING-RF SIGN (RED)
12" WIDE X 18" HIGH

⑤ CAUTION-RF SIGN (YELLOW)
12" WIDE X 18" HIGH

⑥ NOTICE-RF SIGN (BLUE)
12" WIDE X 18" HIGH

⑦ FCC REGISTRATION SIGN
20 WIDE X 4" HIGH

2 / C11 TYPICAL SIGNS AND SPECIFICATIONS

NOT TO SCALE

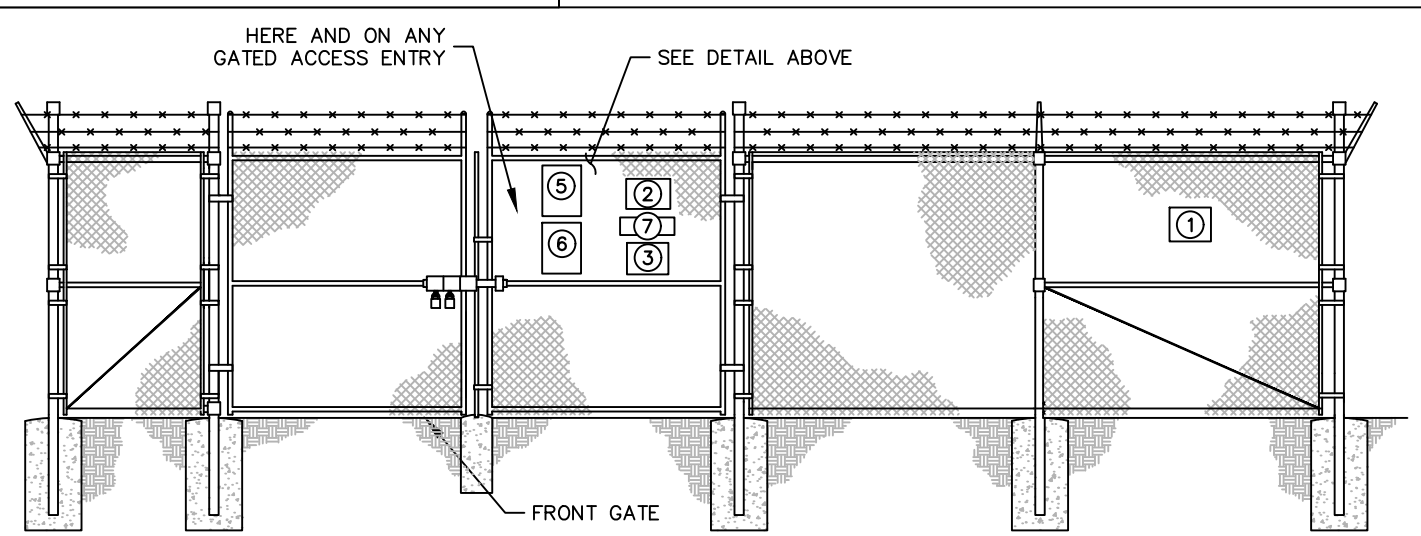

3 / C11 SIGN PLACEMENT FRONT GATE VIEW

NOT TO SCALE

SIGNAGE NOTES:

1. SIGNS SHALL BE FABRICATED FROM CORROSION RESISTANT PRESSED METAL, AND PAINTED WITH LONG LASTING UV RESISTANT COATINGS.
2. SIGNS (EXCEPT WHERE NOTED OTHERWISE) SHALL BE MOUNTED TO THE TOWER, GATE, AND FENCE USING A MINIMUM OF 9 GAUGE ALUMINUM WIRE, HOG RINGS (AS UTILIZED IN FENCE INSTALLATIONS) OR BRACKETS WHERE NECESSARY. BRACKETS SHALL BE OF SIMILAR METAL AS THE STRUCTURE TO AVOID GALVANIC CORROSION.

verizon
10300 OLD ALABAMA ROAD CONNECTOR
ALPHARETTA, GEORGIA 30022

PROJECT INFORMATION:

SITE NAME:
POND FORK
SITE No.: 581347
FUZE PROJECT #: 16350691
4410 HOLLY SPRINGS ROAD
GILLSVILLE, GA 30543
HALL COUNTY

PLANS PREPARED BY:

Kimley»Horn
11720 AMBER PARK DRIVE, SUITE 600
ALPHARETTA, GA 30009
PHONE: 770-619-4280
WWW.KIMLEY-HORN.COM

REV:	DATE:	ISSUED FOR:	BY:
7			
6			
5			
4			
3			
2			
1	08/31/21	CONSTRUCTION	DRC
0	05/18/21	CONSTRUCTION	DRC
A	04/29/21	PRELIMINARY	DRC

LICENSER:

GEORGIA REGISTERED No. PE043908 PROFESSIONAL ENGINEER DAVID RAINEY COUSINS

10/12/21

KHA PROJECT NUMBER: 013509266

DRAWN BY: TDM CHECKED BY: TRN

SHEET TITLE: SITE SIGNAGE DETAILS

SHEET NUMBER: C11

K:\ATL_Wireless\000_Verizon\2020 Sites\Pond Fork A\CAD\CD\CA-CB.dwg ---- 10/12/21 8:46 AM by: Drew.Pitts

This document, together with the concepts and designs presented herein, as an instrument of service, is intended only for the specific purpose and client for which it was prepared. Reuse of and improper reliance on this document without written authorization and adaptation by Kimley-Horn and Associates, Inc. shall be without liability to Kimley-Horn and Associates, Inc.

Copyright Kimley-Horn and Associates, Inc., 2021

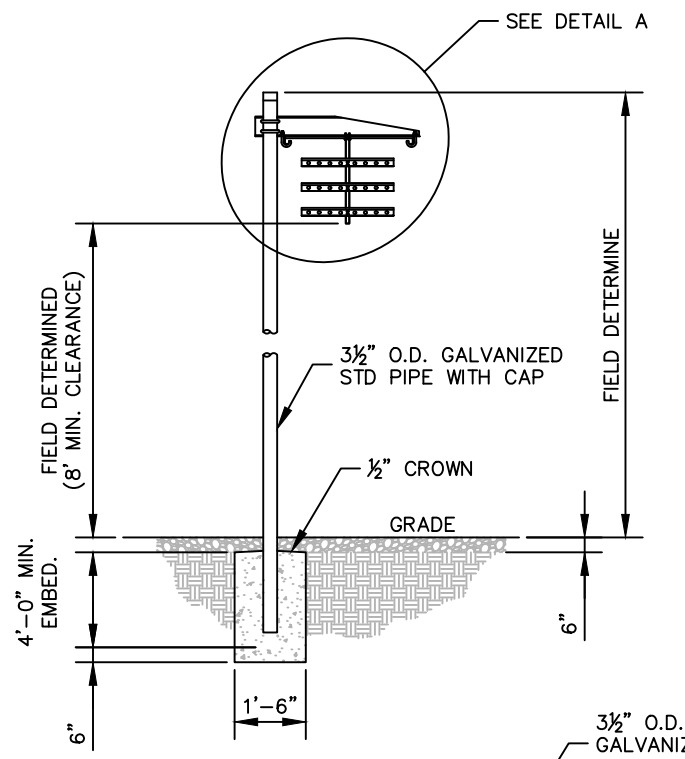

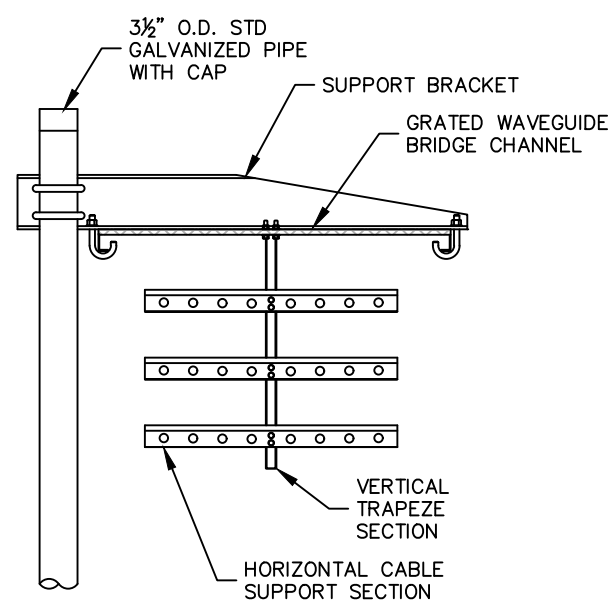

DETAIL A

ANDREW 1 POST WAVEGUIDE BRIDGE KIT (PART #: WB-K210-B15, OR APPROVED EQUIVALENT)

NOTE:

1. ALL MATERIALS FURNISHED BY CONTRACTOR UNLESS OTHERWISE NOTED.

1 / C12 WAVEGUIDE BRIDGE DETAIL

NOT TO SCALE

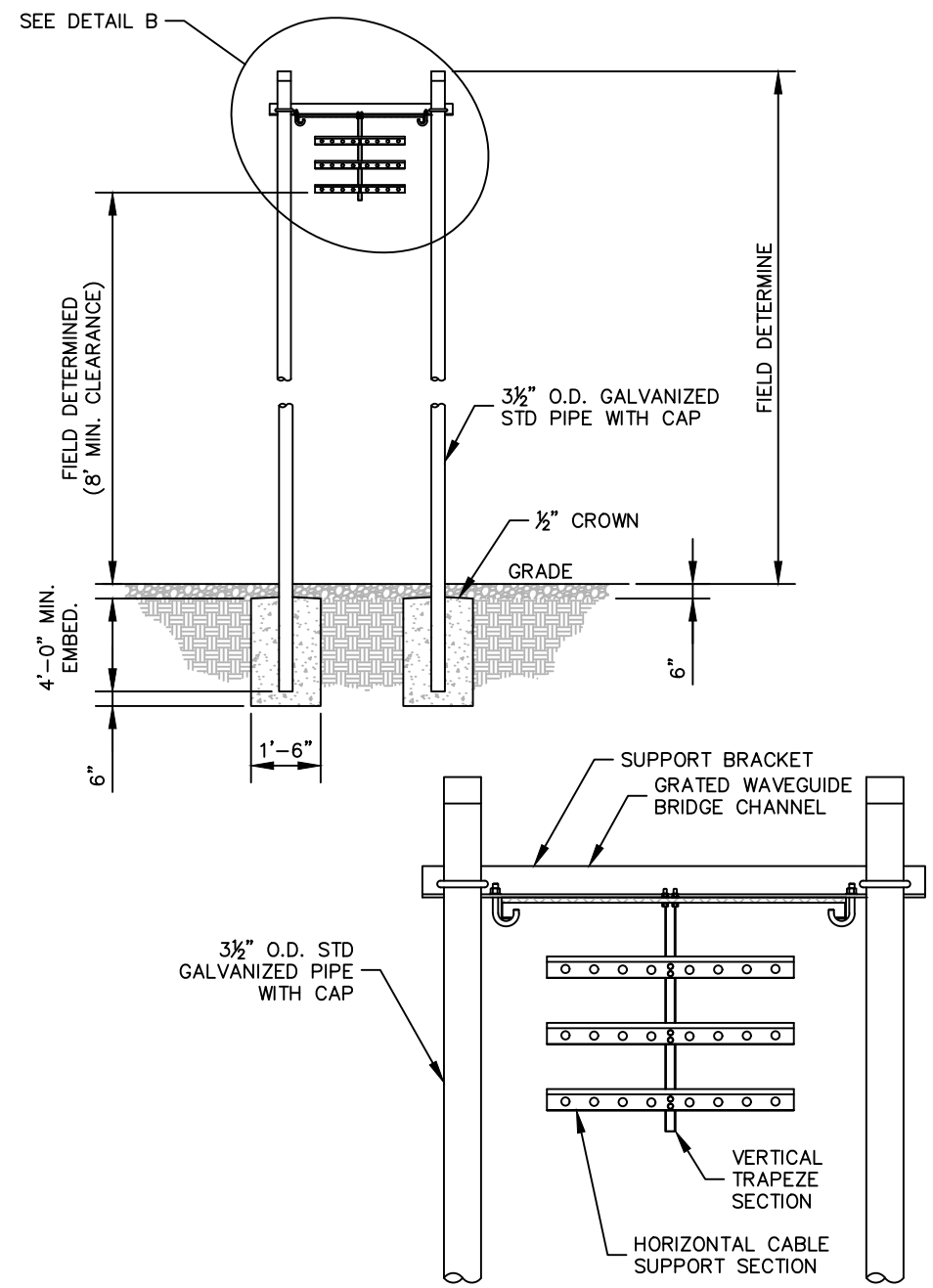

DETAIL B

ANDREW 2 POST WAVEGUIDE BRIDGE KIT (PART #: WB-K410-B15, OR APPROVED EQUIVALENT)

NOTE:

1. ALL MATERIALS FURNISHED BY CONTRACTOR UNLESS OTHERWISE NOTED.

2 / C12 WAVEGUIDE BRIDGE DETAIL (ALT DESIGN - 2 PIPE COLUMNS)

NOT TO SCALE

verizon
10300 OLD ALABAMA ROAD CONNECTOR
ALPHARETTA, GEORGIA 30022

PROJECT INFORMATION:

SITE NAME:
POND FORK
SITE No.: 581347
FUZE PROJECT #: 16350691
4410 HOLLY SPRINGS ROAD
GILLSVILLE, GA 30543
HALL COUNTY

PLANS PREPARED BY:

Kimley»Horn
11720 AMBER PARK DRIVE, SUITE 600
ALPHARETTA, GA 30009
PHONE: 770-619-4280
WWW.KIMLEY-HORN.COM

REV:	DATE:	ISSUED FOR:	BY:
7			
6			
5			
4			
3			
2			
1	08/31/21	CONSTRUCTION	DRC
0	05/18/21	CONSTRUCTION	DRC
A	04/29/21	PRELIMINARY	DRC

LICENSER:

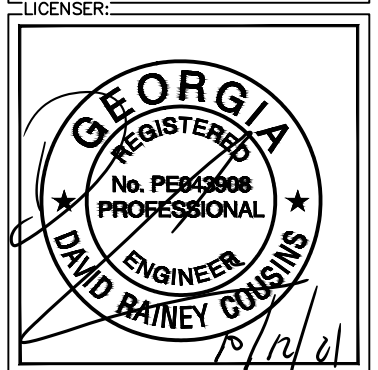

KHA PROJECT NUMBER: 013509266

DRAWN BY: TDM CHECKED BY: TRN

SHEET TITLE: WAVEGUIDE BRIDGE DETAILS

SHEET NUMBER: C12

K:\ATL_Wireless\000_Verizon\2020 Sites\Pond Fork A\CAD\CD\GA-GB.dwg ---- 10/12/21 8:46 AM by: Drew.Pitts

This document, together with the concepts and designs presented herein, as an instrument of service, is intended only for the specific purpose and client for which it was prepared. Reuse of and improper reliance on this document without written authorization and adaptation by Kimley-Horn and Associates, Inc. shall be without liability to Kimley-Horn and Associates, Inc.

Copyright Kimley-Horn and Associates, Inc., 2021

NORTH

NOTE:
RADIO FREQUENCY DESIGN SHEET NOT AVAILABLE AT THIS TIME. PLEASE REFER TO THE CONSTRUCTION RFDS FOR FINAL ANTENNA AND APPURTENANCE CONFIGURATIONS.

CARRIER NOTE:
PER SECTION OF 17.410.40. F. PROVISIONS FOR CO-LOCATION. 3. ALL NEW TOWER INSTALLATIONS OF OVER 150 FEET IN HEIGHT SHALL PROVIDE ANTENNA AND SUPPORT SPACE FOR AT LEAST FIVE (5) CARRIERS.

MOUNT NOTE:
MOUNT MODEL TO BE SPECIFIED BY MOUNT MANUFACTURER AND SHALL BE SPECIFIED IN ACCORDANCE WITH NSTD_445 FOR THE PROPOSED RF LOADING.

1 / C13 ANTENNA ORIENTATION PLAN

(NOT TO SCALE, FOR ILLUSTRATIVE PURPOSES ONLY, SEE STRUCTURAL ANALYSIS BY OTHERS TO CONFIRM ANTENNA MOUNT TYPE)

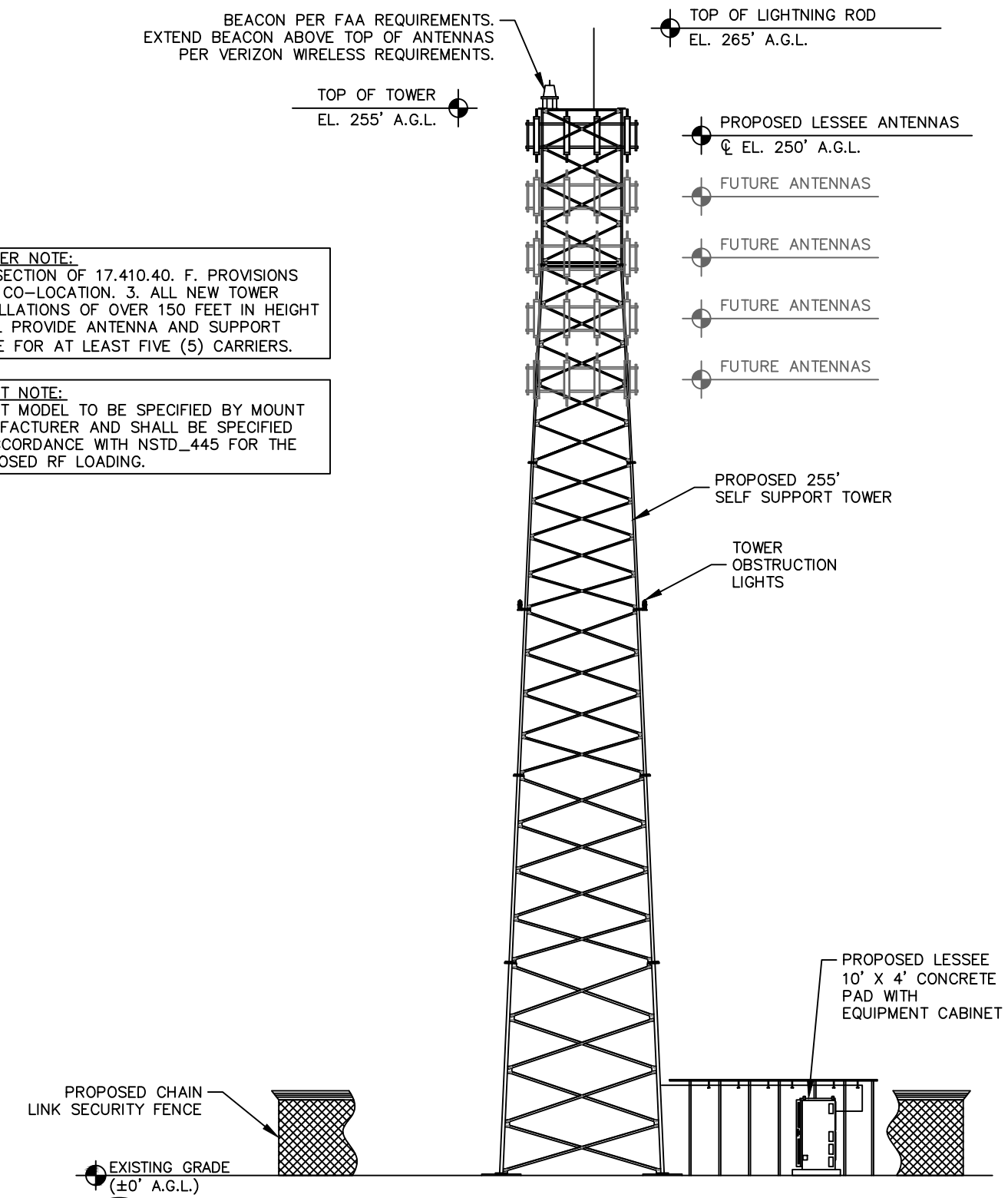

2 / C13 SELF SUPPORT TOWER ELEVATION - N VIEW (FACING S)

NOT TO SCALE

NOTES:

1. ALL PROPOSED ATTACHMENTS TO TOWER BASED ON TOWER DESIGN DRAWINGS BY OTHERS (SEE GENERAL NOTE 1.07, SHEET N1).
2. THE TOWER ELEVATION SHOWN IS FOR REFERENCE ONLY.
3. COAX/FIBER CABLE LENGTHS ARE APPROXIMATE. CONTRACTOR TO VERIFY CORRECT LENGTH IN FIELD AT TIME OF CONSTRUCTION.
4. PROPOSED TOWER WILL BE GALVANIZED STEEL-GRAY IN COLOR.

NOTES:

1. ALL INFORMATION ON THIS PAGE IS PROVIDED BY VERIZON WIRELESS AND/OR OTHERS AND IS SHOWN FOR ILLUSTRATIVE PURPOSES ONLY. CONTRACTOR SHALL CONTACT THE VERIZON WIRELESS CONSTRUCTION MANAGER PRIOR TO CONSTRUCTION FOR ALL DETAILED ANTENNA, AND COAX CABLE INFORMATION.
2. REFER TO STRUCTURAL ANALYSIS BY TOWER OWNER FOR ANALYSIS OF PROPOSED TOWER.
3. IT IS UNDERSTOOD THAT KIMLEY-HORN MAKES NO WARRANTY, EITHER EXPRESSED OR IMPLIED, FINDINGS, DESIGNS, RECOMMENDATIONS, SPECIFICATIONS, OPINION, OR PROFESSIONAL ADVICE RELATING TO THE STRUCTURAL ADEQUACY OF THE PROPOSED TOWER OR ATTACHMENT OF ANTENNAS OR OTHER APPURTENANCES.

verizon
10300 OLD ALABAMA ROAD CONNECTOR
ALPHARETTA, GEORGIA 30022

PROJECT INFORMATION:

SITE NAME:
POND FORK
SITE No.: 581347
FUZE PROJECT #: 16350691
4410 HOLLY SPRINGS ROAD
GILLSVILLE, GA 30543
HALL COUNTY

PLANS PREPARED BY:

Kimley»Horn
11720 AMBER PARK DRIVE, SUITE 600
ALPHARETTA, GA 30009
PHONE: 770-619-4280
WWW.KIMLEY-HORN.COM

REV:	DATE:	ISSUED FOR:	BY:
7			
6			
5			
4			
3			
2			
1	08/31/21	CONSTRUCTION	DRC
0	05/18/21	CONSTRUCTION	DRC
A	04/29/21	PRELIMINARY	DRC

LICENSER:

GEORGIA REGISTERED No. PE043908 PROFESSIONAL ENGINEER DAVID RAINEY COUSINS
10/12/21

KHA PROJECT NUMBER: 013509266

DRAWN BY: TDM CHECKED BY: TRN

SHEET TITLE: ANTENNA AND TOWER ELEVATION DETAILS

SHEET NUMBER: C13

K:\ATL_Wireless\000_Verizon\2020 Sites\Pond Fork A\CAD\CD\CA-CB.dwg ---- 10/12/21 8:46 AM by: Drew.Pitts

This document, together with the concepts and designs presented herein, as an instrument of service, is intended only for the specific purpose and client for which it was prepared. Reuse of and improper reliance on this document without written authorization and adaptation by Kimley-Horn and Associates, Inc. shall be without liability to Kimley-Horn and Associates, Inc.

Copyright Kimley-Horn and Associates, Inc., 2021

NOTE:
EXISTING NATURAL VEGETATION TO BE MAINTAINED AS A BUFFER ALONG WESTERLY SIDE OF COMPOUND.

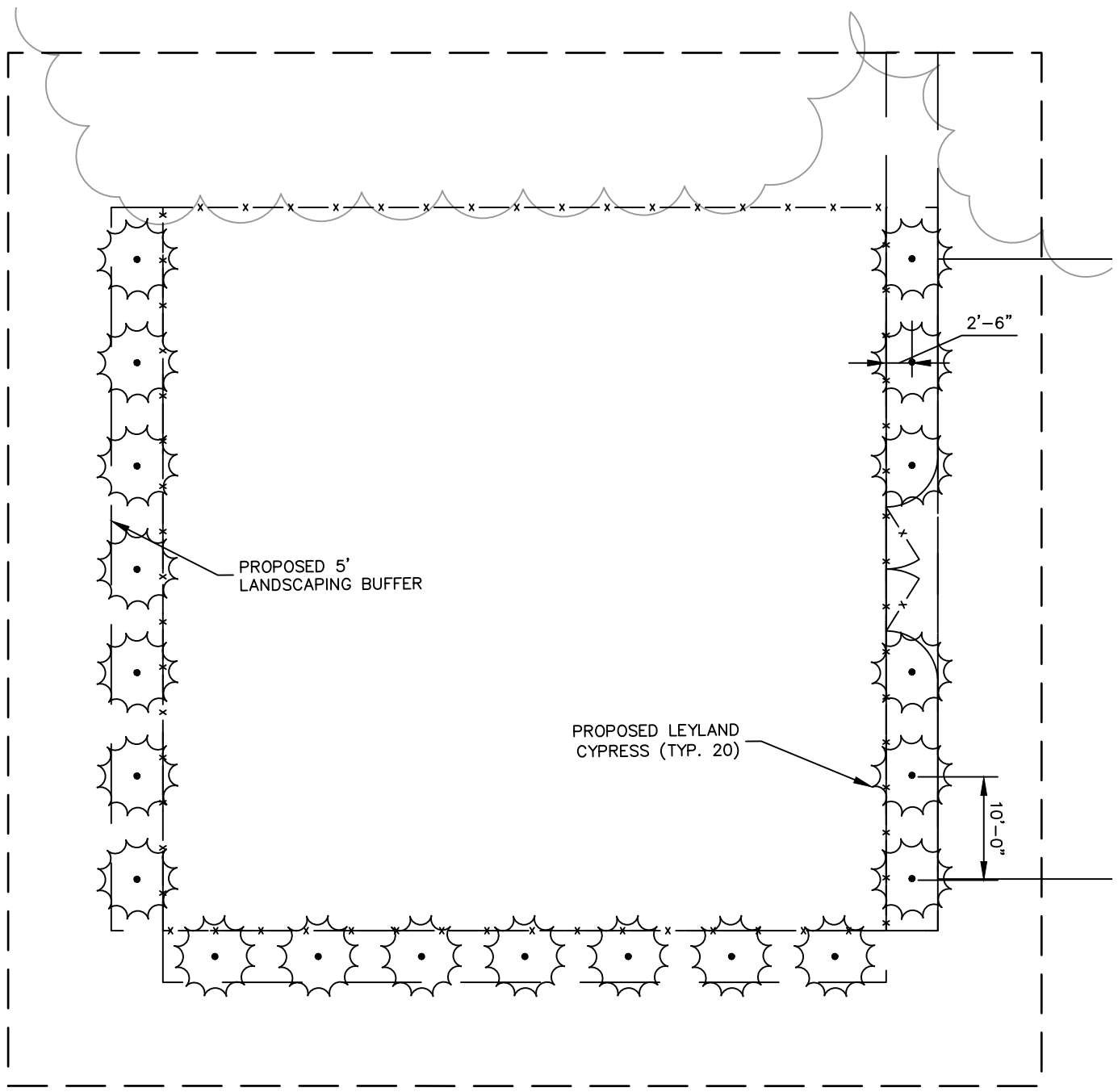

1 / L1 LANDSCAPING PLAN
SCALE: 1" = 15'

GENERAL LANDSCAPE NOTES:

1. THE LANDSCAPE CONTRACTOR SHALL BE RESPONSIBLE FOR COORDINATION OF HIS WORK WITH THAT OF ALL OTHER CONTRACTORS. THIS PLAN DOES NOT GUARANTEE THE EXISTENCE OR NON-EXISTENCE OF ANY UTILITIES. PRIOR TO COMMENCEMENT OF ANY WORK, THE LANDSCAPE CONTRACTOR SHALL VERIFY THE LOCATIONS OF ALL ABOVE GROUND AND UNDERGROUND UTILITIES.
2. THE QUALITY AND SIZE OF ALL PLANT MATERIAL SHALL CONFORM TO THE MOST CURRENT STANDARDS AS SET FORTH IN ANSI Z60.180 - AMERICAN STANDARD FOR NURSERY STOCK.
3. ALL DISTURBED AREAS NOT COVERED BY HARDSCAPE OR PLANT MATERIALS SHALL BE COVERED WITH SEED AND STRAW.
4. PLANT SUBSTITUTION MAY BE PERMITTED ONLY AFTER PROOF THAT SPECIFIED PLANTS ARE UNAVAILABLE AND THE REQUEST HAS BEEN SUBMITTED TO THE OWNER OR LANDSCAPE ARCHITECT. THE CONTRACTOR SHALL PROVIDE THE NEAREST EQUIVALENT OBTAINABLE SIZE AND VARIETY OF THE PLANT HAVING THE SAME ESSENTIAL CHARACTERISTICS AS THE PLANT SPECIFIED
5. MINOR PLANT LOCATION ADJUSTMENTS MAY BE MADE IN THE FIELD TO ENSURE ACCESS TO UTILITY JUNCTION BOXES, FREE SITE LIGHTING OF FUTURE TREE CANOPY INTERFERENCE AND ALLOW UNINHIBITED PEDESTRIAN / VEHICULAR CIRCULATION ON ALL PAVEMENTS OR FOUNDATIONS.
6. ALL SHRUB MASSES OF TWO OR MORE SHALL BE EDGED INTO A PLANTING BED AND MULCHED PER DETAIL. ALL INDIVIDUAL TREES AND SHRUBS SHALL HAVE A MULCH SAUCER EQUAL IN DIAMETER TO THE PLANTING PIT DIAMETER AND SHALL BE MULCHED AS SHOWN ON THE DETAILS. UNLESS OTHERWISE INDICATED, ALL BED EDGES SHALL BE A DEEP CUT CLEAN SPADE EDGE.
7. THE CONTRACTOR SHALL VERIFY THAT EACH TREE OR SHRUB PIT WILL DRAIN BEFORE INSTALLING PLANT MATERIAL. HE SHALL FILL THE HOLE WITH SIX INCHES (6") OF WATER THAT SHOULD PERCOLATE OUT WITHIN TWENTY-FOUR HOURS. SHOULD ANY AREA NOT DRAIN PROPERLY, A PERFORATED DRAIN LINE SHALL BE INSTALLED, OR THE PLANTS RELOCATED.
8. THE CONTRACTOR SHALL NOTIFY THE OWNER IMMEDIATELY IF HE ENCOUNTERS ANY UNSUITABLE SURFACE OR SUBSURFACE DRAINAGE CONDITIONS, SOIL DEPTH, LATENT SOILS, HARD PAN, UTILITY LINES, OR OTHER CONDITIONS THAT WILL JEOPARDIZE THE HEALTH AND VIGOR OF THE PLANTS. SHOULD THE CONTRACTOR NOT NOTIFY THE OWNER OF A PROBLEM AREA, HE WARRANTS THAT THE AREAS ARE SUITABLE FOR PROPER GROWTH AND DEVELOPMENT OF ALL PLANTS INSTALLED.
9. THE CONTRACTOR SHOULD VERIFY LANDSCAPING/TREE PLANTING LOCATIONS WITH THE PUBLIC UTILITIES DEPARTMENT TO AVOID CONFLICTS WITH WATER, SEWER, AND GAS LINES.
10. PLANTS SHALL BE SO TRAINED IN DEVELOPMENT AND APPEARANCE AS TO BE UNQUESTIONABLE SUPERIOR IN FORM, COMPACTNESS AND SYMMETRY. THEY SHALL BE SOUND, HEALTHY, VIGOROUS, WELL BRANCHED AND DENSELY FOLIATED WHEN IN LEAF, AND FREE OF DISEASE AND INSECT ADULT EGGS, PUPAE OR LARVAE. THEY SHALL HAVE HEALTHY, WELL-DEVELOPED ROOT SYSTEMS AND SHALL BE FREE FROM PHYSICAL DAMAGE OR OTHER CONDITIONS THAT WOULD PREVENT THRIVING GROWTH.
11. THERE SHALL BE NO CIRCLING OR GIRDLING ROOTS. CIRCLING ROOTS SHOULD BE CUT IN AT LEAST ONE PLACE.
12. THERE SHOULD BE ONE DOMINANT LEADER TO THE TOP OF THE TREE WITH THE LARGEST BRANCHES SPACED AT LEAST 6 INCHES APART. THERE CAN BE TWO LEADERS IN THE TOP 10% OF THE TREE IF IT IS OTHERWISE OF GOOD QUALITY.
13. THE TREE CANOPY SHOULD BE SYMMETRICAL AND FREE OF LARGE VOIDS. CLEAR TRUNK SHOULD BE NO MORE THAN 40% OF TREE HEIGHT UNLESS OTHERWISE SPECIFIED IN THE PLANTING SPECIFICATIONS. CLEAR TRUNK SHALL BE OF SUFFICIENT HEIGHT TO CLEAR SURROUNDING USES THAT MAY BE IMPACTED BY THE FUTURE GROWTH OF THE TREE.
14. OPEN TRUNK AND BRANCH WOUNDS SHALL BE LESS THAN 10% OF THE CIRCUMFERENCE AT THE WOUND AND NO MORE THAN 2 INCHES TALL. PROPERLY MADE PRUNING CUTS ARE NOT CONSIDERED OPEN TRUNK WOUNDS. THERE SHOULD BE NO CONKS OR BLEEDING, AND THERE SHOULD BE NO SIGNS OF INSECTS OR DISEASE ON MORE THAN 5% OF THE TREE.
15. IF ANY OF THE ABOVE CONDITIONS ARE NOT MET, TREES MAY BE REJECTED.
16. TREE PROTECTION DEVICES MUST BE INSTALLED AND INSPECTED PRIOR TO ANY CLEARING, GRUBBING, OR GRADING OF THE SITE BY THE LOCAL ARBORIST.

PLANTING LIST

SYM./KEY	QTY.	BOTANICAL NAME	COMMON NAME	SPECIFICATION		
				ROOT	PLANTING MIN. HEIGHT	SPACING
TO	20	CUPRESSUS LEYLANDII	LEYLAND CYPRESS	B&B	8'	10' O.C.

LEGEND

LEYLAND CYPRESS

NORTH

0 7.5 15 30
GRAPHIC SCALE: 1" = 15'

verizon
10300 OLD ALABAMA ROAD CONNECTOR
ALPHARETTA, GEORGIA 30022

PROJECT INFORMATION:
SITE NAME:
POND FORK
SITE No.: 581347
FUZE PROJECT #: 16350691
HOLLY SPRINGS ROAD
GILLSVILLE, GA 30543
HALL COUNTY

PLANS PREPARED BY:
Kimley»Horn
11720 AMBER PARK DRIVE, SUITE 600
ALPHARETTA, GA 30009
PHONE: 770-619-4280
WWW.KIMLEY-HORN.COM

REV:	DATE:	ISSUED FOR:	BY:
7			
6			
5			
4			
3			
2			
1	08/31/21	CONSTRUCTION	DRC
0	05/18/21	CONSTRUCTION	DRC
A	04/29/21	PRELIMINARY	DRC

LICENSER:
GEORGIA REGISTERED No. PE043908 PROFESSIONAL ENGINEER DAVID RAINEY COUSINS
10/12/21

KHA PROJECT NUMBER:
013509266

DRAWN BY: TDM
CHECKED BY: TRN

SHEET TITLE:
LANDSCAPING PLAN

SHEET NUMBER:
L1

K:\ATL_Wireless\000_Verizon\2020 Sites\Pond Fork A\CAD\CD\GA-GB.dwg ---- 10/12/21 8:46 AM by: Drew.Pitts

This document, together with the concepts and designs presented herein, as an instrument of service, is intended only for the specific purpose and client for which it was prepared. Reuse of and improper reliance on this document without written authorization and adaptation by Kimley-Horn and Associates, Inc. shall be without liability to Kimley-Horn and Associates, Inc.

Copyright Kimley-Horn and Associates, Inc., 2021

ELECTRICAL NOTES

1.00 CODES, STANDARDS, & SPECIFICATIONS

1.01 IT IS THE CONTRACTOR'S RESPONSIBILITY TO ENSURE THAT ALL MATERIALS AND LABOR RELATED DIRECTLY OR INDIRECTLY TO ALL ELECTRICAL WORK DOCUMENTED IN THESE DRAWINGS SHALL BE PROVIDED AND PERFORMED IN CONFORMANCE WITH ALL CURRENT GOVERNING CODES, STANDARDS, AND PROFESSIONAL STANDARD OF CARE TO INCLUDE THE AMERICAN SOCIETY FOR TESTING AND MATERIALS (ASTM), UNDERWRITERS LABORATORY (UL), NATIONAL ELECTRICAL MANUFACTURERS ASSOCIATION (NEMA), AMERICAN STANDARDS ASSOCIATION (ASA), NATIONAL FIRE PROTECTION ASSOCIATION (NFPA), AND THE NATIONAL ELECTRICAL CODE (NEC).

1.02 MATERIALS SHALL BE NEW AND SHALL CONFORM TO ALL APPLICABLE CURRENT GOVERNING STANDARDS ESTABLISHED FOR EACH ITEM BY ASTM, UL, NEMA, ASA, AND NFPA.

1.03 ALL ELECTRICAL WORK SHALL COMPLY WITH ALL APPLICABLE STATE, COUNTY, AND MUNICIPAL CODES AND ORDINANCES, AS WELL AS ALL CURRENT GOVERNING STANDARDS AND PRACTICES AS REQUIRED BY NEC, NEMA, ANSI, NFPA, UBC, UL, IEEE, AND THE LOCAL UTILITY COMPANY.

1.04 ALL ELECTRICAL GROUNDING SHALL COMPLY WITH THE CURRENT EDITION OF THE NEC.

1.05 CONTRACTOR SHALL MAINTAIN UL LISTED FIRE RATINGS AT ALL WALL PENETRATIONS.

1.06 CONTRACTOR SHALL MAINTAIN A MINIMUM CLEARANCE OF 36" IN FRONT OF ALL ELECTRICAL EQUIPMENT AS REQUIRED BY NEC. MINIMUM CLEARANCE SHALL BE OBSERVED FOR BOTH THE FRONT AND THE REAR OF THE METER H-FRAME RACK AND THE EQUIPMENT H-FRAME RACK.

2.00 GENERAL

2.01 CONTRACTOR SHALL BE RESPONSIBLE FOR ALL PERMITS AND ASSOCIATED FEES RELATED TO THE PROJECT AND SHALL DELIVER A COPY OF ALL PERMITS TO THE VERIZON REPRESENTATIVE.

2.02 CONTRACTOR SHALL SCHEDULE AND SHOULD ATTEND ALL INSPECTIONS REQUIRED BY THE JURISDICTION HAVING AUTHORITY.

2.03 CONTRACTOR SHALL FURNISH ALL LABOR, MATERIALS, TOOLS, ACCESSORIES, ETC., FOR A COMPLETE WORKING ELECTRICAL INSTALLATION.

2.04 ALL WORK SHALL BE PERFORMED IN STRICT ACCORDANCE WITH APPLICABLE BUILDING CODES AND LOCAL ORDINANCES, INSTALLED IN A NEAT MANNER, AND SHALL BE SUBJECT TO APPROVAL BY THE ENGINEER.

2.05 CONTRACTOR SHALL PROTECT ADJACENT EQUIPMENT AND FINISHES FROM DAMAGE AND SHALL REPAIR TO ORIGINAL CONDITION ANY ITEMS DAMAGED AS A RESULT OF THE WORK.

2.06 CONTRACTOR SHALL REPAIR ANY LANDSCAPING DISTURBED DURING CONSTRUCTION.

2.07 IF CONDUIT RUNS HAVE MORE THAN THREE (3) CONSECUTIVE 90 DEGREE TURNS, THE CONTRACTOR SHALL INSTALL PULL BOXES AS REQUIRED BY NEC.

2.08 CONTRACTOR SHALL INDICATE THE LOCATION OF ALL CAPPED UNDERGROUND SPARE CONDUIT ON THE RECORD DRAWINGS SUBMITTED TO THE OWNER.

2.09 CONTRACTOR SHALL COORDINATE EXACT ROUTING OF CONDUIT WITH OWNER. ALL CONDUIT SHALL BE ROUTED WITHIN 3 FEET, EITHER SIDE, OF PERIMETER FENCING.

3.00 MATERIALS

3.01 ALL EQUIPMENT AND MATERIALS SHOWN SHALL BE CONSIDERED NEW UNLESS SPECIFICALLY NOTED OTHERWISE ON THE DRAWINGS.

3.02 FINAL CONNECTIONS OF EQUIPMENT SHALL BE PER MANUFACTURER'S APPROVED WIRING DIAGRAMS, DETAILS, AND INSTRUCTIONS. THE ELECTRICAL CONTRACTOR SHALL PROVIDE MATERIALS AND EQUIPMENT COMPATIBLE WITH EQUIPMENT SUPPLIED BY VERIZON.

3.03 CONTRACTOR SHALL PROVIDE AN UPDATED PANELBOARD DIRECTORY FOR THE PANEL FROM WHICH THE NEW VERIZON EQUIPMENT CIRCUIT WILL BE CONNECTED. CONTRACTOR SHALL SUBMIT UPDATED DIRECTORY IN A PLASTIC COVER TO THE BUILDING OWNER FOR APPROVAL PRIOR TO INSTALLATION.

3.04 CONTRACTOR SHALL FIELD DETERMINE ACTUAL CONDUIT ROUTING AND SHALL OBTAIN APPROVAL FROM THE TOWER OWNER OF THE PROPOSED ROUTING PRIOR TO CONDUIT INSTALLATION.

3.05 ALL CONDUCTORS SHALL BE COPPER WITH THWN INSULATION AND ALL TERMINATIONS SHALL BE RATED FOR AT LEAST 75 DEGREES CELSIUS.

3.06 ALL NEUTRAL CONDUCTORS SHALL HAVE WHITE INSULATION. ALL GROUND CONDUCTORS SHALL HAVE GREEN INSULATION. COLOR TAPE IDENTIFICATION OF THESE CONDUCTORS IS NOT PERMITTED.

3.07 CONTRACTOR SHALL SEAL ALL CONDUITS ENTERING AN ENCLOSURE WITH CONDUIT SEALANT THAT IS COMPATIBLE WITH THE INSULATION OF THE CONDUCTORS IN THE CONDUIT.

3.08 CONDUIT RUNS SHALL HAVE A CONTINUOUS DOWNWARD SLOPE AWAY FROM ALL EQUIPMENT TO PREVENT WATER INFILTRATION.

3.09 ALL CONDUIT SHALL BE SCHEDULE 40 PVC UNLESS NOTED OTHERWISE ON THE PLANS. WHEN CONDUIT IS ROUTED UNDER A ROADWAY, SCHEDULE 80 PVC CONDUIT SHALL BE UTILIZED. MANUFACTURED BEND RADII SHALL BE PER NEC.

3.10 CONTRACTOR SHALL PROVIDE TWO (2) 200 POUND TEST POLYETHYLENE PULL CORDS IN ALL CONDUITS AND ALL INNERDUCTS. PULL CORDS SHALL BE SECURED AT EACH END OF CONDUIT RUNS. ALL SPARE CONDUIT ENDS SHALL BE CAPPED WITH MANUFACTURED PVC FITTINGS.

3.11 CONTRACTOR SHALL BOND EACH METALLIC CONDUIT ENTERING A METALLIC ENCLOSURE WITH A #8 MIN AWG INSULATED COPPER BONDING JUMPER PER NEC. CONTRACTOR SHALL BOND ALL ELECTRICAL EQUIPMENT TO THE H-FRAME RACK ON WHICH EQUIPMENT IS MOUNTED WITH #8 MIN AWG INSULATED COPPER BONDING JUMPERS PER NEC.

3.12 CONTRACTOR SHALL IDENTIFY THE END OF ALL SPARE UNDERGROUND CONDUITS AND PROVIDE AND INSTALL 90 DEGREE ELBOWS WITH VERTICAL CONDUIT EXTENSIONS TO EXTEND 3" ABOVE FINISHED CRUSHED AGGREGATE GRADE. CONTRACTOR SHALL TERMINATE CONDUITS WITH MANUFACTURED CONDUIT CAPS THAT THE CONTRACTOR HAS PAINTED ORANGE.

3.13 CONTRACTOR SHALL PROVIDE AND INSTALL AN ENGRAVED PHENOLIC PLATE ON THE FRONT OF THE INTEGRATED LOAD CENTER. THE WORDING ON THE PLATE SHALL READ AS FOLLOWS: "MAXIMUM DRAW OF ALL RECTIFIERS AND EQUIPMENT ON THE LOAD CENTER CANNOT EXCEED 35kW. IF ADDITIONAL POWER IS REQUIRED, THE EXISTING 35kW GENERATOR MUST BE REPLACED."

4.00 PRE-CONSTRUCTION COORDINATION

4.01 CONTRACTOR SHALL VISIT THE SITE PRIOR TO BID AND NOTE EXISTING CONDITIONS THAT MIGHT AFFECT THEIR WORK. ALL SUCH CONDITIONS SHALL BE REPORTED TO THE ENGINEER PRIOR TO BID.

4.02 THE CONTRACTOR SHALL PROVIDE A UTILITY LOCATOR AND SHALL VERIFY THE ACTUAL LOCATION OF ALL UTILITIES PRIOR TO CONSTRUCTION. THE CONTRACTOR SHALL BE RESPONSIBLE FOR PROTECTING ALL EXISTING UTILITIES. ANY DAMAGE TO EXISTING UTILITIES SHALL BE REPAIRED AT THE CONTRACTOR'S EXPENSE.

4.03 CONTRACTOR SHALL VERIFY, PRIOR TO ROUGH-IN, THAT SITE CONDITIONS ALLOW FOR THE PLACEMENT OF THE ELECTRICAL EQUIPMENT AS SHOWN ON THE PLANS.

4.04 CONTRACTOR SHALL COORDINATE WITH LOCAL ELECTRICAL UTILITY REGARDING THE EXACT LOCATION OF THE TRANSFORMER, ALL METERING REQUIREMENTS, AND CONDUIT ROUTING BETWEEN TRANSFORMER AND METER.

4.05 CONTRACTOR SHALL COORDINATE WITH LOCAL TELCO UTILITY REGARDING THE EXACT LOCATION OF THE TELCO SERVICE ENTRY POINT.

4.06 CONTRACTOR SHALL COORDINATE WITH AUTHORITY HAVING JURISDICTION REGARDING LOCAL FROST LINE REQUIREMENTS FOR RACEWAY MATERIAL SELECTION AND INSTALLATION.

4.07 CONTRACTOR SHALL PERFORM AN ARC FLASH ANALYSIS AT THE INTEGRATED LOAD CENTER AND PROVIDE ARC FLASH LABEL PER NEC.

4.08 ALL CIRCUIT BREAKERS AND EQUIPMENT SHALL HAVE A MINIMUM AIC RATING OF 10,000 AMPS. IF THE RATING OF THE UTILITY TRANSFORMER PROVIDING THE ELECTRICAL SERVICE IS GREATER THAN 75 kVA, THE CONTRACTOR SHALL PERFORM A SHORT CIRCUIT ANALYSIS TO DETERMINE THE REQUIRED AIC RATING FOR THE CIRCUIT BREAKERS AND EQUIPMENT. PRIOR TO PURCHASING EQUIPMENT, THE CONTRACTOR SHALL CONTACT THE ELECTRIC UTILITY AND OBTAIN IN WRITING THE MAXIMUM AVAILABLE FAULT CURRENT (AFC) AT THE UTILITY SERVICE POINT. PROVIDE MAX. AFC SIGNAGE AS REQUIRED PER NEC 110.24. THE CONTRACTOR SHALL ENSURE ALL ELECTRICAL EQUIPMENT, CIRCUIT BREAKERS, DISCONNECTS, FUSES, AND PANELBOARDS HAVE A FAULT CURRENT INTERRUPTING RATING GREATER THAN THE AVAILABLE FAULT CURRENT.

verizon
10300 OLD ALABAMA ROAD CONNECTOR
ALPHARETTA, GEORGIA 30022

PROJECT INFORMATION:

SITE NAME:
POND FORK
SITE No.: 581347
FUZE PROJECT #: 16350691
4410 HOLLY SPRINGS ROAD
GILLSVILLE, GA 30543
HALL COUNTY

PLANS PREPARED BY:

Kimley»Horn
11720 AMBER PARK DRIVE, SUITE 600
ALPHARETTA, GA 30009
PHONE: 770-619-4280
WWW.KIMLEY-HORN.COM

REV:	DATE:	ISSUED FOR:	BY:
7			
6			
5			
4			
3			
2			
1			
0	05/18/21	CONSTRUCTION	CCH
A	04/29/21	PRELIMINARY	CCH

LICENSER:

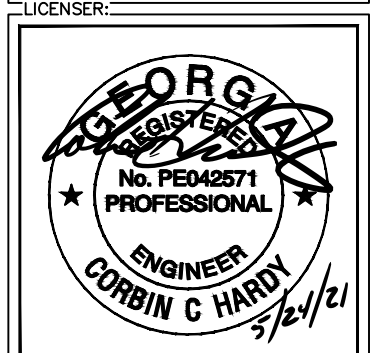

KHA PROJECT NUMBER: 013509266

DRAWN BY:	CHECKED BY:
TDM	TRN

SHEET TITLE: ELECTRICAL NOTES

SHEET NUMBER: E1

K:\ATL_Wireless\000_Verizon\2020 Sites\Pond Fork A\CAD\CD\CA-GB.dwg ---- 05/18/21 5:46 PM by: Tim.Merchant

This document, together with the concepts and designs presented herein, as an instrument of service, is intended only for the specific purpose and client for which it was prepared. Reuse of and improper reliance on this document without written authorization and adaptation by Kimley-Horn and Associates, Inc. shall be without liability to Kimley-Horn and Associates, Inc.

Copyright Kimley-Horn and Associates, Inc., 2021

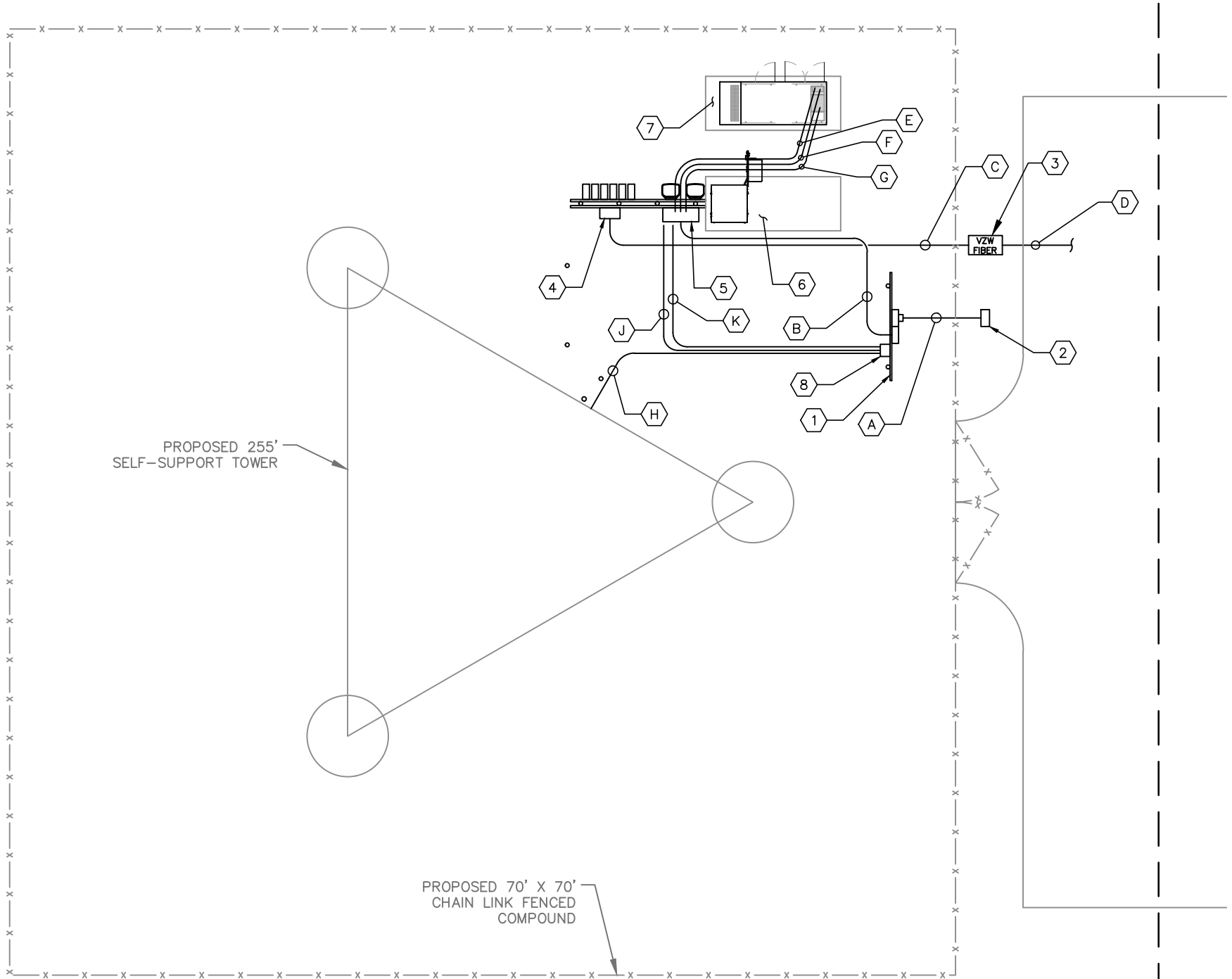

KEY NOTES - ELECTRICAL EQUIPMENT

1. UTILITY METER H-FRAME (SEE DETAIL 1/E4).
2. POWER STUB UP (SEE NOTE 4.04 ON SHEET E1).
3. TRAFFIC RATED TELCO VAULT LABELED "VZW FIBER". (SEE NOTE 4.05 ON SHEET E1)
4. TELCO BOX (SEE SHEET C4).
5. INTEGRATED LOAD CENTER (SEE SHEET C4).
6. VERIZON CONCRETE EQUIPMENT PAD (SEE SHEET C6).
7. VERIZON CONCRETE GENERATOR PAD (SEE SHEET C6).
8. HAZARD LIGHTING CONTROL PANEL (SEE SHEET E4.1).

KEY NOTES - CONDUIT, CONDUCTORS, & MISC.

- A. TWO (2) 4" PVC POWER CONDUITS FOR INCOMING SERVICE LATERALS FROM LOCAL UTILITY (SEE TRENCH DETAIL 2/E7).
- B. 2" PVC POWER CONDUIT FROM PROPOSED METER RACK TO EQUIPMENT RACK (SEE TRENCH DETAIL 2/E7).
- C. 4" PVC TELCO CONDUIT, WITH TWO (2) PULL ROPES (SEE TRENCH DETAIL 2/E7).
- D. TWO (2) 2" PVC CONDUITS FROM RIGHT OF WAY W/TWO (2) PULL ROPES (SEE TRENCH DETAIL 2/E7 AND SHEET E3).
- E. 2" PVC POWER CONDUIT TO THE GENERATOR (SEE TRENCH DETAIL 2/E7).
- F. 1" PVC CONDUIT FOR ROUTING GENERATOR CONTROL AND ALARM SIGNAL CABLES TO THE GENERATOR (SEE TRENCH DETAIL 2/E7).
- G. 1" PVC CONDUIT FOR ROUTING POWER CONDUCTOR TO THE GENERATOR BATTERY CHARGER AND THE GENERATOR BLOCK HEATER (SEE TRENCH DETAIL 2/E7).
- H. 1" PVC POWER CONDUIT FROM PROPOSED HAZARD LIGHTING CONTROL PANEL ON METER RACK TO TOWER LIGHTING.
- J. 1" PVC TELCO CONDUIT FROM PROPOSED HAZARD LIGHTING CONTROL PANEL TO PROPOSED ILC.
- K. 1" PVC POWER CONDUIT FROM PROPOSED HAZARD LIGHTING CONTROL PANEL TO PROPOSED ILC.

1 / E2 UTILITY SERVICE ROUTING PLAN

SCALE: 1" = 10'

NORTH

0 5 10 20

GRAPHIC SCALE: 1" = 10'

verizon
10300 OLD ALABAMA ROAD CONNECTOR
ALPHARETTA, GEORGIA 30022

PROJECT INFORMATION:

SITE NAME:
POND FORK
SITE No.: 581347
FUZE PROJECT #: 16350691
4410 HOLLY SPRINGS ROAD
GILLSVILLE, GA 30543
HALL COUNTY

PLANS PREPARED BY:

Kimley»Horn
11720 AMBER PARK DRIVE, SUITE 600
ALPHARETTA, GA 30009
PHONE: 770-619-4280
WWW.KIMLEY-HORN.COM

REV:	DATE:	ISSUED FOR:	BY:
7			
6			
5			
4			
3			
2			
1			
0	05/18/21	CONSTRUCTION	CCH
A	04/29/21	PRELIMINARY	CCH

LICENSER:

GEORGIA REGISTERED No. PE042571 PROFESSIONAL ENGINEER CORBIN C HARDY 5/21/21

KHA PROJECT NUMBER: 013509266

DRAWN BY: TDM CHECKED BY: TRN

SHEET TITLE: UTILITY SERVICE ROUTING PLAN

SHEET NUMBER: E2

K:\ATL_Wireless\000_Verizon\2020 Sites\Pond Fork A\CAD\CD\GA-GB.dwg ---- 05/18/21 5:46 PM by: Tim.Merchant

This document, together with the concepts and designs presented herein, as an instrument of service, is intended only for the specific purpose and client for which it was prepared. Reuse of and improper reliance on this document without written authorization and adaptation by Kimley-Horn and Associates, Inc. shall be without liability to Kimley-Horn and Associates, Inc.

Copyright Kimley-Horn and Associates, Inc., 2021

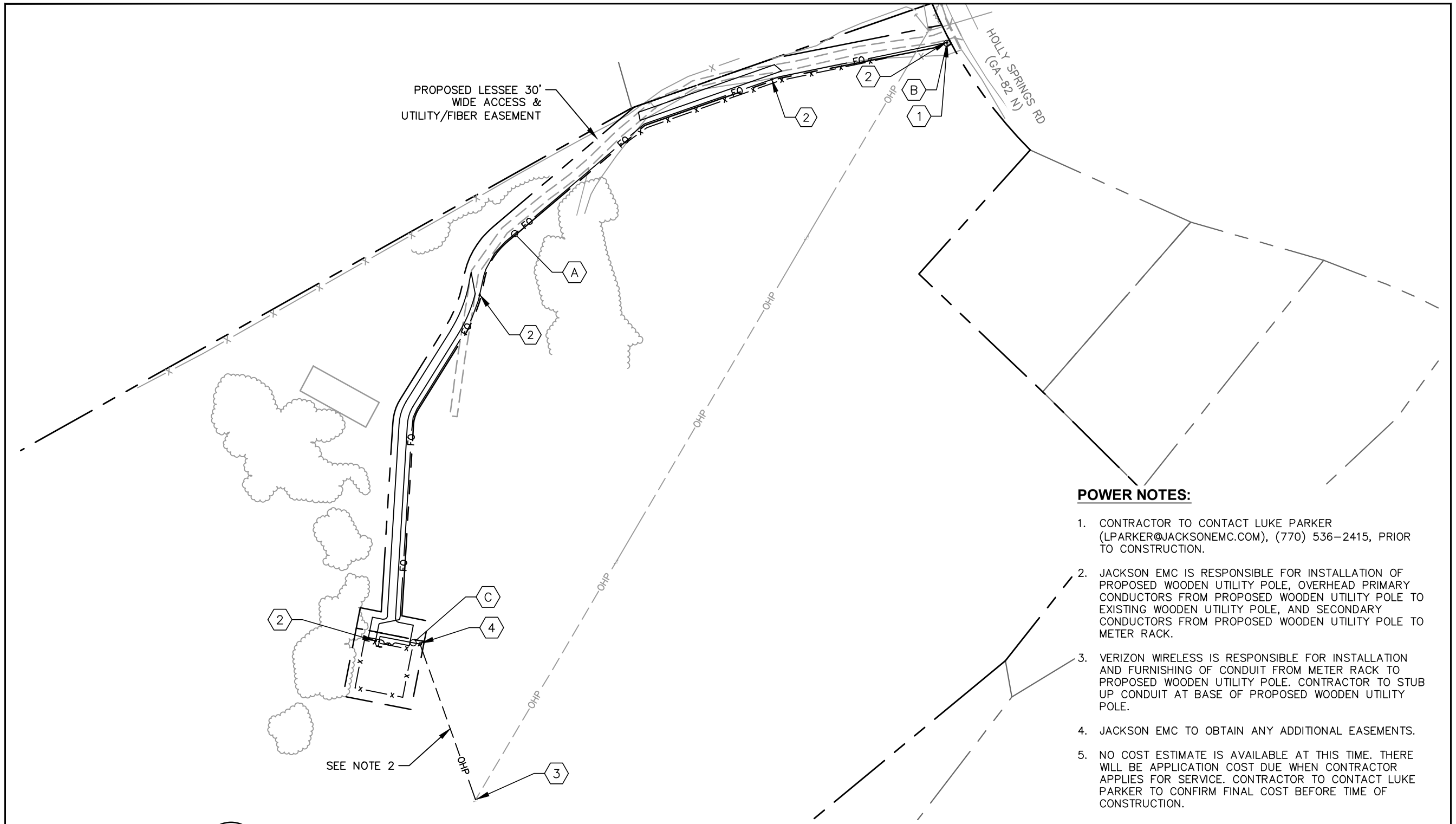

1 / E3 OVERALL UTILITY SERVICE ROUTING PLAN

SCALE: 1" = 150'

NORTH

0 75 150 300

GRAPHIC SCALE: 1" = 150'

KEY NOTES - CONDUIT, CONDUCTORS, & MISC.

- (A) TWO (2) 2" PVC CONDUIT FOR "VZW FIBER" WITH TWO (2) PULL ROPES. (SEE DETAIL 2/E7) (APPROXIMATELY 1,349'± LF); GENERAL CONTRACTOR TO CONFIRM NEED FOR CONDUITS TO RIGHT OF WAY AND HANDHOLE AT RIGHT OF WAY WITH VERIZON CONSTRUCTION MANAGER.
- (B) 4" PVC BRIDGE FIBER CONDUIT. (IF NO EXISTING LIT FIBER HANDHOLE/PEDESTAL IS PRESENT CONTRACTOR TO PROVIDER A 5' LONG CAPPED STUB BRIDGE CONDUIT).
- (C) TWO (2) 4" SCH40 PVC POWER CONDUITS WITH PULL ROPES AND 90 DEGREE RIGID METALLIC SWEEPS.

KEY NOTES - ELECTRICAL EQUIPMENT

- (1) EXISTING LIT FIBER HANDHOLE/PEDESTAL, IF PRESENT.
- (2) TRAFFIC RATED TELCO VAULT LABELED "VZW FIBER". (SPACED EVERY 500', AT MAJOR TRANSITIONS AND AS NEEDED TO ALLOW DARK FIBER TO BE PULLED) (SEE NOTE 4.05 ON SHEET E1)
- (3) EXISTING WOODEN UTILITY POLE OWNED BY JACKSON EMC.
- (4) PROPOSED UTILITY POLE WITH POLE-MOUNTED TRANSFORMER FURNISHED AND INSTALLED BY JACKSON EMC.

POWER NOTES:

1. CONTRACTOR TO CONTACT LUKE PARKER (LPARKER@JACKSONEMC.COM), (770) 536-2415, PRIOR TO CONSTRUCTION.
2. JACKSON EMC IS RESPONSIBLE FOR INSTALLATION OF PROPOSED WOODEN UTILITY POLE, OVERHEAD PRIMARY CONDUCTORS FROM PROPOSED WOODEN UTILITY POLE TO EXISTING WOODEN UTILITY POLE, AND SECONDARY CONDUCTORS FROM PROPOSED WOODEN UTILITY POLE TO METER RACK.
3. VERIZON WIRELESS IS RESPONSIBLE FOR INSTALLATION AND FURNISHING OF CONDUIT FROM METER RACK TO PROPOSED WOODEN UTILITY POLE. CONTRACTOR TO STUB UP CONDUIT AT BASE OF PROPOSED WOODEN UTILITY POLE.
4. JACKSON EMC TO OBTAIN ANY ADDITIONAL EASEMENTS.
5. NO COST ESTIMATE IS AVAILABLE AT THIS TIME. THERE WILL BE APPLICATION COST DUE WHEN CONTRACTOR APPLIES FOR SERVICE. CONTRACTOR TO CONTACT LUKE PARKER TO CONFIRM FINAL COST BEFORE TIME OF CONSTRUCTION.

verizon

10300 OLD ALABAMA ROAD CONNECTOR
ALPHARETTA, GEORGIA 30022

PROJECT INFORMATION:

SITE NAME:
POND FORK
SITE No.: 581347
FUZE PROJECT #: 16350691
4410 HOLLY SPRINGS ROAD
GILLSVILLE, GA 30543
HALL COUNTY

PLANS PREPARED BY:

Kimley»Horn

11720 AMBER PARK DRIVE, SUITE 600
ALPHARETTA, GA 30009
PHONE: 770-619-4280
WWW.KIMLEY-HORN.COM

REV:	DATE:	ISSUED FOR:	BY:
7			
6			
5			
4			
3			
2			
1			
0	05/18/21	CONSTRUCTION	CCH
A	04/29/21	PRELIMINARY	CCH

LICENSER:

GEORGIA REGISTERED No. PE042571 PROFESSIONAL ENGINEER CORBIN C HARDY 5/24/21

KHA PROJECT NUMBER:
013509266

DRAWN BY: TDM
CHECKED BY: TRN

SHEET TITLE:
OVERALL UTILITY ROUTING PLAN

SHEET NUMBER:
E3

K:\ATL_Wireless\000_Verizon\2020 Sites\Pond Fork A\CAD\CD\GA-GB.dwg ---- 05/18/21 5:46 PM by: Tim.Merchant

This document, together with the concepts and designs presented herein, as an instrument of service, is intended only for the specific purpose and client for which it was prepared. Reuse of and improper reliance on this document without written authorization and adaptation by Kimley-Horn and Associates, Inc. shall be without liability to Kimley-Horn and Associates, Inc.

Copyright Kimley-Horn and Associates, Inc., 2021

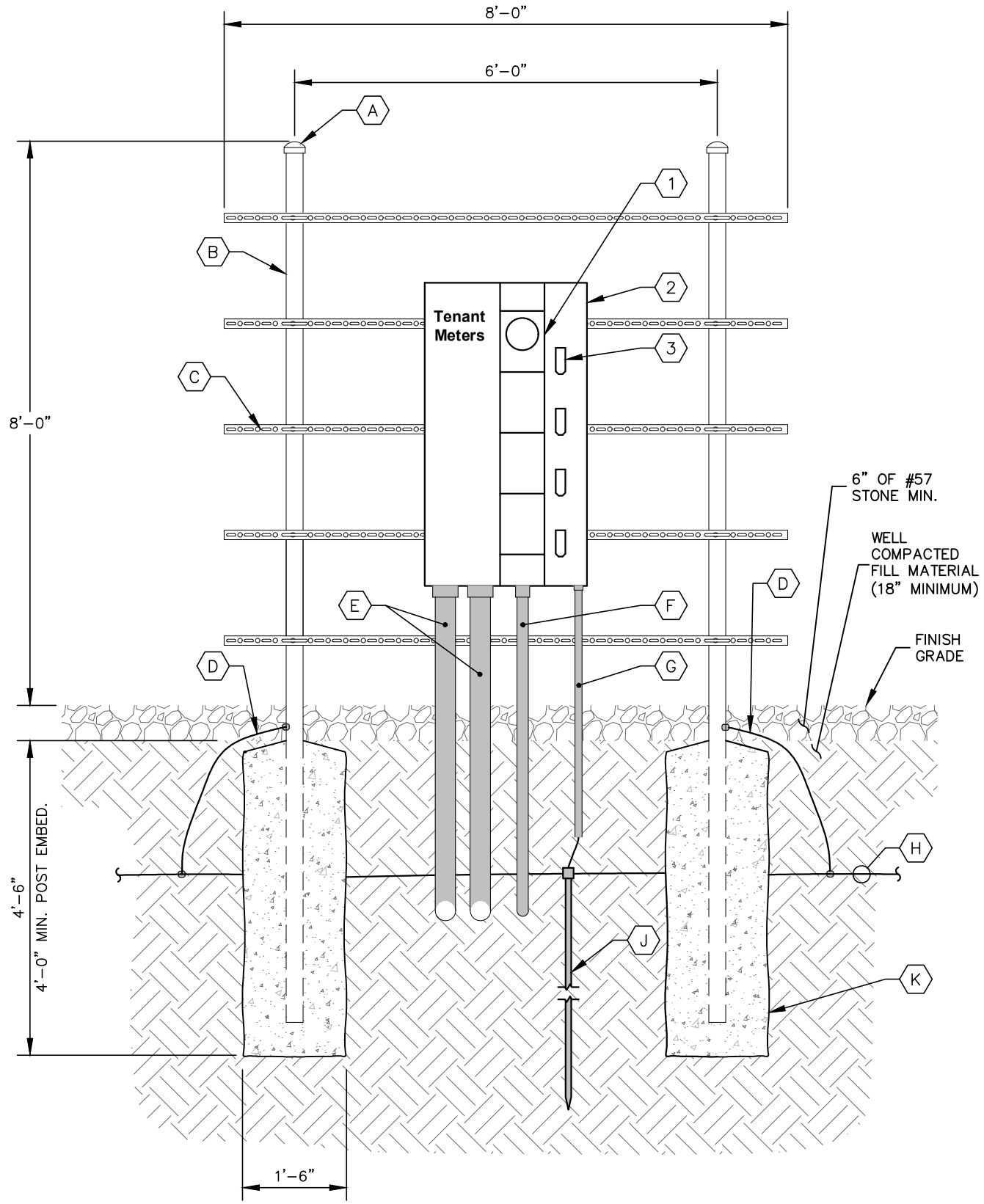

1
E4

METER RACK DETAILS - FRONT

NOT TO SCALE

KEY NOTES - CONDUIT, CONDUCTORS, & MISC

A. GALVANIZED RIGID STEEL CAP, TYPICAL.

B. 3" GALVANIZED RIGID STEEL PIPE, TYPICAL.

C. 1⅝" x 1⅝" GALVANIZED STEEL CHANNEL (UNISTRUT #P1000 OR APPROVED EQUIVALENT) WITH PLASTIC END CAP (UNISTRUT #P2860), TYPICAL.

D. ONE (1) #2 AWG BARE SOLID TINNED COPPER BONDING CONDUCTORS (BC) FROM H-FRAME VERTICAL PIPE TO GROUND RING, EXOTHERMIC WELD BOTH ENDS.

E. 4" PVC CONDUIT FOR INCOMING SERVICE LATERALS FROM LOCAL UTILITY, TYPICAL OF 2.

F. 2" PVC CONDUIT FOR ROUTING FEEDERS TO THE ILC.

G. ¾" PVC CONDUIT WITH ONE (1) – 2/0 BARE STRANDED TINNED COPPER GROUNDING ELECTRODE CONDUCTOR (GEC) FROM GROUNDING LUG TO GROUND ROD, EXOTHERMIC WELD GEC TO GROUND ROD.

H. GROUND RING (SEE DETAIL 1/E9).

J. GROUND ROD, EXOTHERMIC WELD TO GROUND RING. (SEE DETAIL 1/E9 & 2/E11).

K. CONCRETE FOUNDATION FOR H-FRAME VERTICAL PIPE. CONCRETE SHALL HAVE A 28 DAY COMPRESSIVE STRENGTH OF 4,000 PSI. AND INCLUDE FIBERMESH 300-3E.

KEY NOTES - ELECTRICAL EQUIPMENT

1. 200 AMP METER SOCKET IN NEMA 3R ENCLOSURE, TYPICAL OF 4. ONLY TOP SOCKET WILL RECEIVE METER UNDER THIS CONTRACT.

2. 800 AMP, 22KAIC, 4 GANG, SERVICE ENTRANCE RATED METER CENTER IN NEMA 3R ENCLOSURE. BOND TO RACK PER NEC.

3. 200 AMP, 2 POLE (22KAIC) DISCONNECT CIRCUIT BREAKER FOR TOP METER ONLY. CONTRACTOR SHALL MOUNT THE METER CENTER SUCH THAT THE TOP CIRCUIT BREAKER IS NO MORE THAN 6' ABOVE GRADE.

NOTE: FOR CLARITY PURPOSES, THE FRONT ELEVATION OF THE "H" FRAME ONLY SHOWS EQUIPMENT AND CONDUIT ASSOCIATED WITH THE FRONT SIDE. SEE SHEET E4.1 FOR DETAILS ASSOCIATED WITH EQUIPMENT AND CONDUIT MOUNTED ON THE REAR SIDE OF THE "H" FRAME.

verizon
10300 OLD ALABAMA ROAD CONNECTOR
ALPHARETTA, GEORGIA 30022

PROJECT INFORMATION:

SITE NAME:
POND FORK
SITE No.: 581347
FUZE PROJECT #: 16350691
4410 HOLLY SPRINGS ROAD
GILLSVILLE, GA 30543
HALL COUNTY

PLANS PREPARED BY:

Kimley»Horn
11720 AMBER PARK DRIVE, SUITE 600
ALPHARETTA, GA 30009
PHONE: 770-619-4280
WWW.KIMLEY-HORN.COM

REV:	DATE:	ISSUED FOR:	BY:
7			
6			
5			
4			
3			
2			
1			
0	05/18/21	CONSTRUCTION	CCH
A	04/29/21	PRELIMINARY	CCH

LICENSER:

GEORGIA REGISTERED No. PE042571 PROFESSIONAL ENGINEER CORBIN C HARDY 5/24/21

KHA PROJECT NUMBER: 013509266

DRAWN BY: TDM CHECKED BY: TRN

SHEET TITLE: METER RACK DETAILS - FRONT

SHEET NUMBER: E4

K:\ATL_Wireless\000_Verizon\2020 Sites\Pond Fork A\CAD\CD\GA-GB.dwg ---- 05/18/21 5:47 PM by: Tim.Merchant

This document, together with the concepts and designs presented herein, as an instrument of service, is intended only for the specific purpose and client for which it was prepared. Reuse of and improper reliance on this document without written authorization and adaptation by Kimley-Horn and Associates, Inc. shall be without liability to Kimley-Horn and Associates, Inc.

Copyright Kimley-Horn and Associates, Inc., 2021

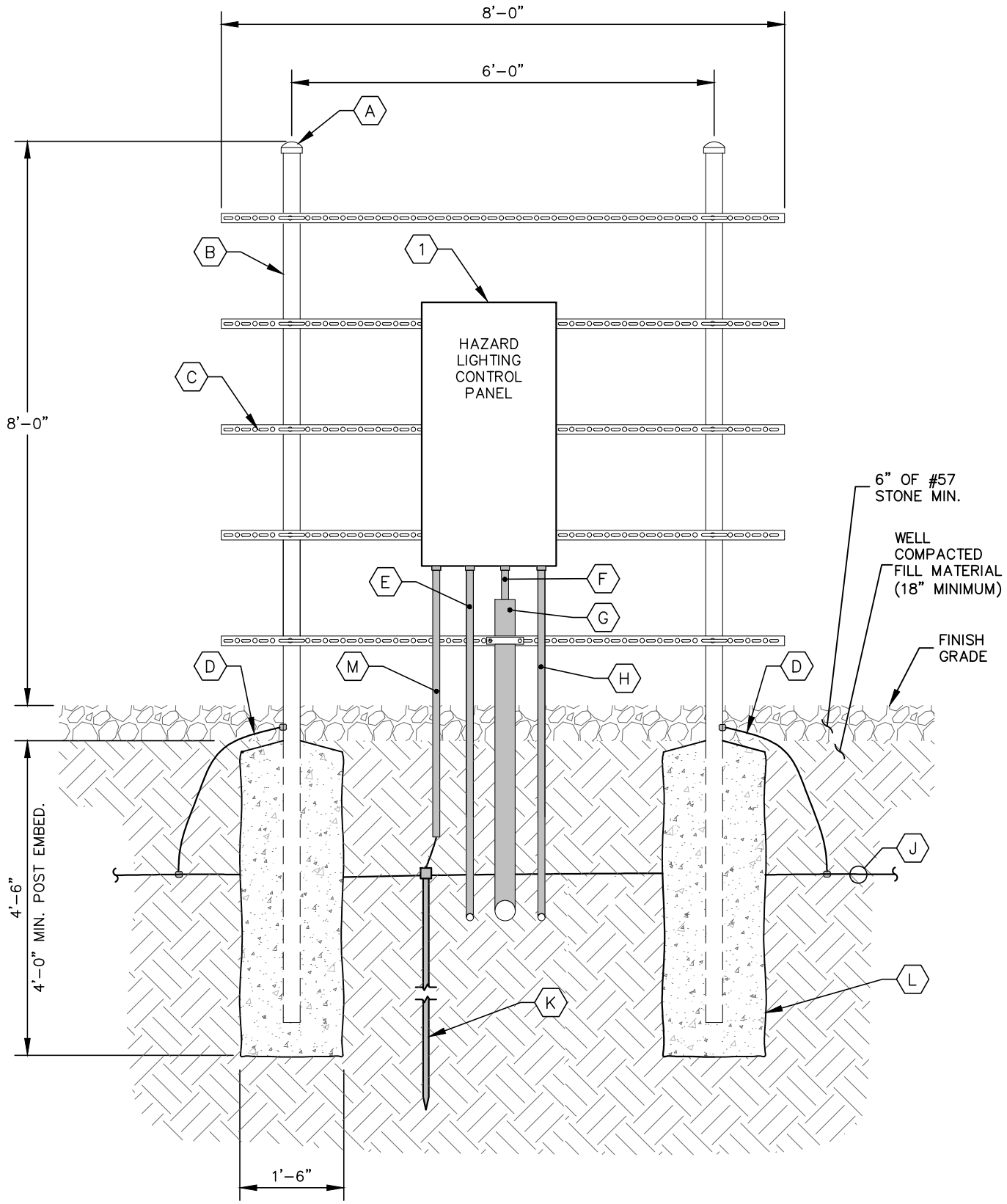

1 / E4.1 METER RACK DETAILS - REAR

NOT TO SCALE

KEY NOTES - CONDUIT, CONDUCTORS, & MISC

- (A) GALVANIZED RIGID STEEL CAP, TYPICAL.
- (B) 3" GALVANIZED RIGID STEEL PIPE, TYPICAL.
- (C) 1⅝" x 1⅝" GALVANIZED STEEL CHANNEL (UNISTRUT #P1000 OR APPROVED EQUIVALENT) WITH PLASTIC END CAP (UNISTRUT #P2860), TYPICAL.
- (D) ONE (1) #2 AWG BARE SOLID TINNED COPPER BONDING CONDUCTORS (BC) FROM H–FRAME VERTICAL PIPE TO GROUND RING, EXOTHERMIC WELD BOTH ENDS.
- (E) 1" PVC CONDUIT FOR POWER CABLES FROM INTEGRATED LOAD CENTER.
- (F) FLASH HEAD CABLE.
- (G) 2½" FLASH HEAD CABLE PROTECTION CONDUIT (MIN. 18" BELOW GRADE). TRANSITION TO 1" PVC CONDUIT FOR UNDERGROUND ROUTING TO TOWER.
- (H) 1" PVC CONDUIT FOR TELECOM LINK FROM INTEGRATED LOAD CENTER.
- (J) GROUND RING (SEE SHEETS E7 – E11).
- (K) GROUND ROD, EXOTHERMIC WELD TO GROUND RING. (SEE "GROUNDING SINGLE–LINE DIAGRAM" SHEET FOR DETAILS).
- (L) CONCRETE FOUNDATION FOR H–FRAME VERTICAL PIPE. CONCRETE SHALL HAVE A 28 DAY COMPRESSIVE STRENGTH OF 4,000 PSI. AND INCLUDE FIBERMESH 300–3E.
- (M) ¾" PVC WITH ONE (1) – #2 AWG BARE TINNED COPPER GROUND LEAD FROM GROUNDING LUG TO GROUND ROD, EXOTHERMIC WELD GEC TO GROUND ROD.

KEY NOTES - ELECTRICAL EQUIPMENT

- (1) HAZARD LIGHTING CONTROL PANEL IN NEMA 4X ENCLOSURE.

NOTE: FOR CLARITY PURPOSES, THE REAR ELEVATION OF THE "H" FRAME ONLY SHOWS EQUIPMENT AND CONDUIT ASSOCIATED WITH THE REAR SIDE. SEE SHEET E4 FOR DETAILS ASSOCIATED WITH EQUIPMENT AND CONDUIT MOUNTED ON THE FRONT SIDE OF THE "H" FRAME.

verizon
10300 OLD ALABAMA ROAD CONNECTOR
ALPHARETTA, GEORGIA 30022

PROJECT INFORMATION:

SITE NAME:
POND FORK
SITE No.: 581347
FUZE PROJECT #: 16350691
4410 HOLLY SPRINGS ROAD
GILLSVILLE, GA 30543
HALL COUNTY

PLANS PREPARED BY:

Kimley»Horn
11720 AMBER PARK DRIVE, SUITE 600
ALPHARETTA, GA 30009
PHONE: 770–619–4280
WWW.KIMLEY–HORN.COM

REV:	DATE:	ISSUED FOR:	BY:
7			
6			
5			
4			
3			
2			
1			
0	05/18/21	CONSTRUCTION	CCH
A	04/29/21	PRELIMINARY	CCH

LICENSER:

GEORGIA REGISTERED No. PE042571 PROFESSIONAL ENGINEER CORBIN C HARDY 5/24/21

KHA PROJECT NUMBER: 013509266

DRAWN BY: TDM CHECKED BY: TRN

SHEET TITLE: METER RACK DETAILS - REAR

SHEET NUMBER: E4.1

K:\ATL_Wireless\000_Verizon\2020 Sites\Pond Fork A\CAD\CD\GA-GB.dwg ---- 05/18/21 5:47 PM by: Tim.Merchant

This document, together with the concepts and designs presented herein, as an instrument of service, is intended only for the specific purpose and client for which it was prepared. Reuse of and improper reliance on this document without written authorization and adaptation by Kimley–Horn and Associates, Inc. shall be without liability to Kimley–Horn and Associates, Inc.

Copyright Kimley–Horn and Associates, Inc., 2021

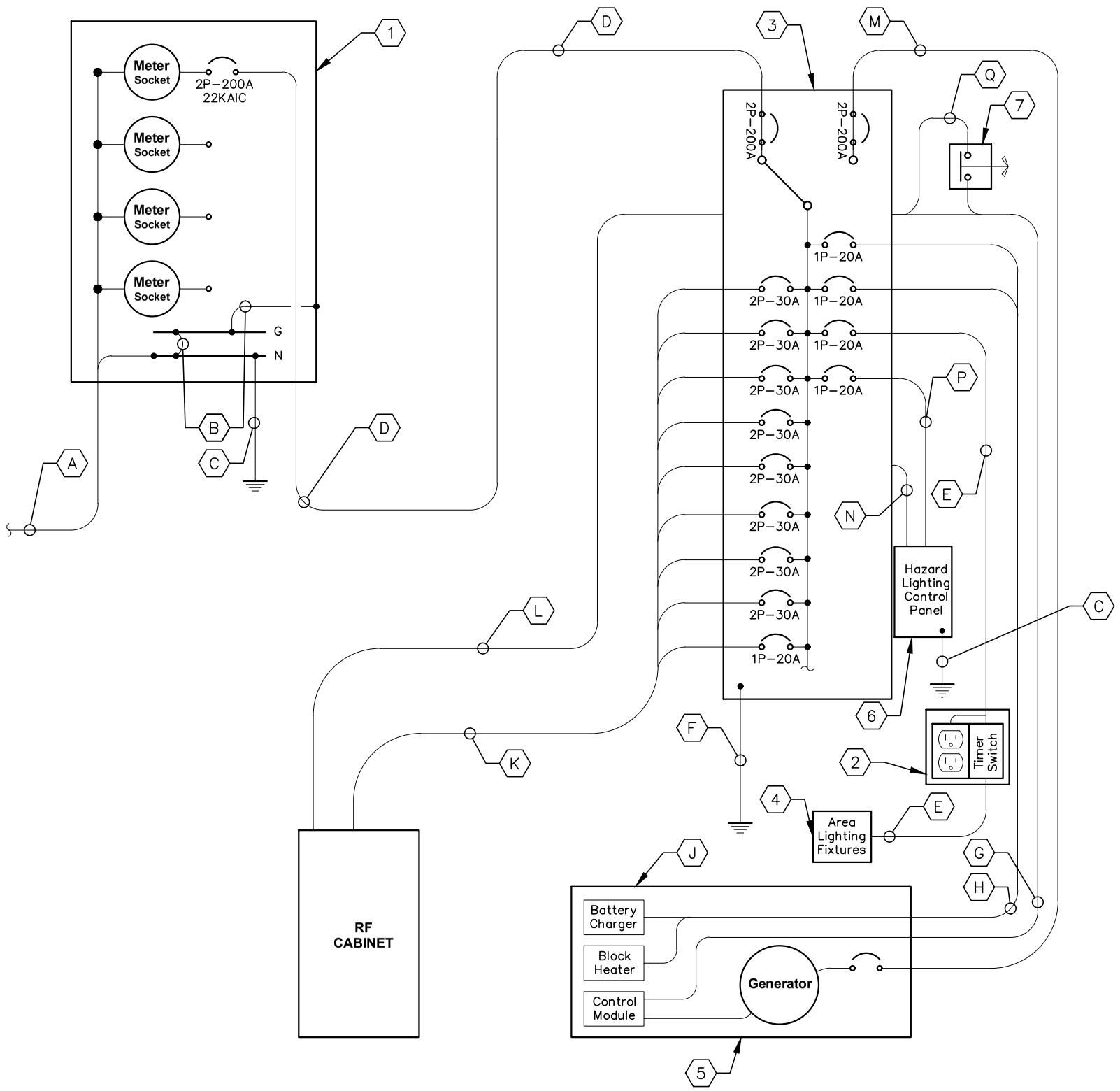

KEY NOTES - CONDUIT, CONDUCTORS, & MISC

- (A) TWO (2) 4" CONDUITS BY CONTRACTOR FOR INCOMING SERVICE LATERALS BY LOCAL UTILITY FOR 800 AMP, 120/240 VOLT SINGLE PHASE SERVICE.
- (B) BOND GROUND BUS TO NEUTRAL BUS AND GROUND BUS TO ENCLOSURE WITH 2/0 BONDING JUMPERS.
- (C) ONE (1) 2/0 AWG BARE TINNED COPPER GROUNDING ELECTRODE CONDUCTOR (GEC) TO GROUND ROD, EXOTHERMIC WELD GEC TO GROUND ROD.
- (D) THREE (3) 3/0 CONDUCTORS AND ONE (1) #6 AWG GROUND IN 2" CONDUIT.
- (E) TWO (2) #12 AWG CONDUCTORS AND ONE (1) #12 AWG GROUND IN 1" CONDUIT.
- (F) ONE (1) #2 AWG BARE TINNED COPPER GROUND LEAD FROM GROUNDING LUG TO GROUND ROD, EXOTHERMIC WELD TO GROUND ROD.
- (G) AUTOMATIC TRANSFER SWITCH ALARM AND GENERATOR CONTROL CABLES IN 1" CONDUIT.
- (H) FOUR (4) #12 CONDUCTORS AND ONE (1) #12 AWG GROUND IN 1" CONDUIT.
- (J) THE GENERATOR, WHEN UTILIZING A TWO POLE ATS WITH A SOLID NEUTRAL, IS NOT A SEPARATELY DERIVED SYSTEM. THEREFORE, DO NOT BOND THE NEUTRAL TO THE GROUND AT THE GENERATOR.
- (K) SIXTEEN (16) #6 AWG CONDUCTORS AND FOUR (4) #6 EG FOR 30 AMP CIRCUITS. TWO (2) #8 AWG CONDUCTORS AND ONE (1) #8 EG FOR 20 AMP CIRCUIT. ALL IN 2" PVC CONDUIT.
- (L) ALARM CABLES IN 1" PVC CONDUIT.
- (M) THREE (3) 2/0 AWG CONDUCTORS AND ONE (1) #6 AWG EG IN 2" CONDUIT. VERIFY GENERATOR BREAKER DOES NOT EXCEED 175 AMPS.
- (N) 1" PVC CONDUIT FOR POWER CABLES FROM INTEGRATED LOAD CENTER TO HAZARD LIGHTING CONTROL PANEL.
- (P) 1" PVC CONDUIT FOR TELCOM LINK.
- (Q) 1" PVC CONDUIT FOR ROUTING POWER CONDUCTORS FROM THE ILC TO THE EMERGENCY GENERATOR STOP SWITCH.

KEY NOTES - ELECTRICAL EQUIPMENT

1. FURNISH AND INSTALL 800 AMP, 3–WIRE, SINGLE PHASE, 120/240 VOLT, 22KAIC, FOUR–SPACE MULTI–GANG METER CENTER WITH 200 AMP RATED METER SOCKETS IN NEMA 3R ENCLOSURE, SE RATED. CONTRACTOR SHALL FURNISH AND INSTALL 200 AMP CIRCUIT BREAKER AT METER BASE IF NOT ALREADY EXISTING.
2. 20 AMP GFCI DUPLEX OUTLET RECEPTACLE AND TIMER SWITCH, ENERLITES HET06 SERIES (OR APPROVED EQUIVALENT) IN LOCKABLE NEMA 3R ENCLOSURE.
3. 200 AMP, 120/240 VOLT, ILC BY GENERAC WITH 42 SPACE PANEL AND AUTOMATIC TRANSFER SWITCH. ALL CIRCUIT BREAKERS SHALL BE RATED 10KAIC MINIMUM. ILC IS FURNISHED BY VERIZON AND INSTALLED BY GENERAL CONTRACTOR.
4. FURNISH AND INSTALL TWO (2) AREA LIGHTS, (LITHONIA HFR–250M–TA120–DNA–LP1), (OR APPROVED EQUIVALENT).
5. 35 KW PROPANE GENERATOR, CONTRACTOR SHALL COORDINATE SPECIFIC GENERATOR CONFIGURATION WITH OWNER AND INSTALL THE GENERATOR IN ACCORDANCE WITH MANUFACTURER'S INSTALLATION INSTRUCTIONS. GENERATOR BREAKER SIZED AND PROVIDED BY GENERATOR MANUFACTURER.
6. FURNISH AND INSTALL HAZARD LIGHTING CONTROL PANEL IN NEMA 4X ENCLOSURE.
7. FURNISH AND INSTALL EMERGENCY GENERATOR STOP SWITCH IN NEMA 3R ENCLOSURE.

REQUIRED SIGNAGE PER NEC 702 AT SERVICE DISCONNECT

"WARNING: Shock hazard exists if grounding electrode conductor or bonding jumper connection in this equipment is removed while alternate source(s) is energized. Opening the equipment disconnect will cause the stand-by generator to start. To remove power entirely from the equipment, the generator must be turned OFF and the generator circuit breaker must be open."

REQUIRED SIGNAGE PER NEC 702 AT SERVICE DISCONNECT & INTEGRATED LOAD CENTER

"NOTE: Emergency power is supplied by a stand-by generator located behind Verizon equipment rack."

1 / E5 ELECTRICAL SINGLE LINE DIAGRAM

NOT TO SCALE

verizon
10300 OLD ALABAMA ROAD CONNECTOR
ALPHARETTA, GEORGIA 30022

PROJECT INFORMATION:

SITE NAME:
POND FORK
SITE No.: 581347
FUZE PROJECT #: 16350691
4410 HOLLY SPRINGS ROAD
GILLSVILLE, GA 30543
HALL COUNTY

PLANS PREPARED BY:

Kimley»Horn
11720 AMBER PARK DRIVE, SUITE 600
ALPHARETTA, GA 30009
PHONE: 770–619–4280
WWW.KIMLEY–HORN.COM

REV:	DATE:	ISSUED FOR:	BY:
7			
6			
5			
4			
3			
2			
1			
0	05/18/21	CONSTRUCTION	CCH
A	04/29/21	PRELIMINARY	CCH

LICENSER:

GEORGIA REGISTERED No. PE042571 PROFESSIONAL ENGINEER CORBIN C HARDY 5/24/21

KHA PROJECT NUMBER: 013509266

DRAWN BY:	CHECKED BY:
TDM	TRN

SHEET TITLE: ELECTRICAL SINGLE LINE DIAGRAM

SHEET NUMBER: E5

K:\ATL_Wireless\000_Verizon\2020 Sites\Pond Fork A\CAD\CD\GA-GB.dwg ---- 05/18/21 5:47 PM by: Tim.Merchant

This document, together with the concepts and designs presented herein, as an instrument of service, is intended only for the specific purpose and client for which it was prepared. Reuse of and improper reliance on this document without written authorization and adaptation by Kimley–Horn and Associates, Inc. shall be without liability to Kimley–Horn and Associates, Inc.

Copyright Kimley–Horn and Associates, Inc., 2021

PANEL SCHEDULE - VERIZON INTEGRATED LOAD CENTER

Voltage: 240/120 Volts
Phase, Wires: Single Phase, 3 Wire
Mounting Type: Surface
Enclosure Type: NEMA 3R

MCB Size: 200 Amps
AIC Rating: 10,000 Amps min
Bus Rating: 200 Amps
Neutral Rating: 100%

Load Served	Load (kVA) A	Load (kVA) B	Circuit Bkr Size	Ckt Nbr	Phase A B	Ckt Nbr	Circuit Bkr Size	Load (kVA) A	Load (kVA) B	Load Served
*RECTIFIER 1	2.13		2P-30	1		2	1P-20	1.54		*AREA LIGHTS/GFCI
		2.13		3		4	1P-20		1.50	GEN BLOCK HEATER
*RECTIFIER 2	2.13		2P-30	5		6	1P-20	0.30		GEN BATTERY CHARGER
		2.13		7		8	1P-20		0.60	TOWER LIGHT
*RECTIFIER 3	2.13		2P-30	9		10	1P-20	0.18		CAB DUPLEX OUTLET
		2.13		11		12	----		0.00	SPACE
*RECTIFIER 4	2.13		2P-30	13		14	----	0.00		SPACE
		2.13		15		16	----		0.00	SPACE
*RECTIFIER 5	2.13		2P-30	17		18	----	0.00		SPACE
		2.13		19		20	----		0.00	SPACE
*RECTIFIER 6	2.13		2P-30	21		22	----	0.00		SPACE
		2.13		23		24	----		0.00	SPACE
RECTIFIER 7 (SPARE)	0.00		2P-30	25		26	----	0.00		SPACE
		0.00		27		28	----		0.00	SPACE
RECTIFIER 8 (SPARE)	0.00		2P-30	29		30	----	0.00		SPACE
		0.00		31		32	----		0.00	SPACE
SPACE	0.00		----	33		34	----	0.00		SPACE
SPACE		0.00	----	35		36	----		0.00	SPACE
SPACE	0.00		----	37		38	----	0.00		SPACE
TVSS (INTERNAL TO ILC)		0.00	2P-30	39		40	----		0.00	SPACE
	0.00			41		42	----	0.00		SPACE
Sub-Total (kVA)	12.78	12.78						2.02	2.10	**Sub-Total (kVA)**
								A	**B**	
								14.80	14.88	
								29.68		**Total Connected (kVA)**

LOAD SUMMARY

Load Description	Connected Load (kVA) A	Connected Load (kVA) B	Demand Factor	Demand Load (kVA) A	Demand Load (kVA) B
RECTIFIERS/EQUIP	12.78	12.78	1.00	12.78	12.78
LARGEST MOTOR	0.00	0.00	1.25	0.00	0.00
ALL OTHER MOTORS	0.00	0.00	1.00	0.00	0.00
LIGHTING	1.54	0.60	1.25	1.93	0.75
DUPLEX RECEPTACLES	0.18	0.00	1.25	0.23	0.00
TOTAL MISCELLANEOUS	0.30	1.50	1.25	0.38	1.88
Total Power per Phase				15.32	15.41	**kVA**
Total Demand Current per Phase				127.67	128.42	**Amps**
Total Demand Power				30.73		**kVA**
****Generator Load**				29.98		**kVA**

*NOTE: CIRCUIT LOAD AND DEMAND FACTOR PROVIDED BY VERIZON.
**NOTE: CHARGER LOAD REMOVED AND HEATER LOAD DEMAND FACTOR REDUCED TO 1.00 DURING GENERATOR OPERATION.

1 / E6 PANEL SCHEDULE
NOT TO SCALE

verizon
10300 OLD ALABAMA ROAD CONNECTOR
ALPHARETTA, GEORGIA 30022

PROJECT INFORMATION:
SITE NAME:
POND FORK
SITE No.: 581347
FUZE PROJECT #: 16350691
4410 HOLLY SPRINGS ROAD
GILLSVILLE, GA 30543
HALL COUNTY

PLANS PREPARED BY:

Kimley»Horn
11720 AMBER PARK DRIVE, SUITE 600
ALPHARETTA, GA 30009
PHONE: 770-619-4280
WWW.KIMLEY-HORN.COM

REV:	DATE:	ISSUED FOR:	BY:
7			
6			
5			
4			
3			
2			
1			
0	05/18/21	CONSTRUCTION	CCH
A	04/29/21	PRELIMINARY	CCH

LICENSER:
GEORGIA REGISTERED No. PE042571 PROFESSIONAL ENGINEER CORBIN C HARDY
5/24/21

KHA PROJECT NUMBER:
013509266

DRAWN BY: TDM
CHECKED BY: TRN

SHEET TITLE:
PANEL SCHEDULE

SHEET NUMBER:
E6

K:\ATL_Wireless\000_Verizon\2020 Sites\Pond Fork A\CAD\CD\GA-GB.dwg ---- 05/18/21 5:47 PM by: Tim.Merchant

This document, together with the concepts and designs presented herein, as an instrument of service, is intended only for the specific purpose and client for which it was prepared. Reuse of and improper reliance on this document without written authorization and adaptation by Kimley-Horn and Associates, Inc. shall be without liability to Kimley-Horn and Associates, Inc.

Copyright Kimley-Horn and Associates, Inc., 2021

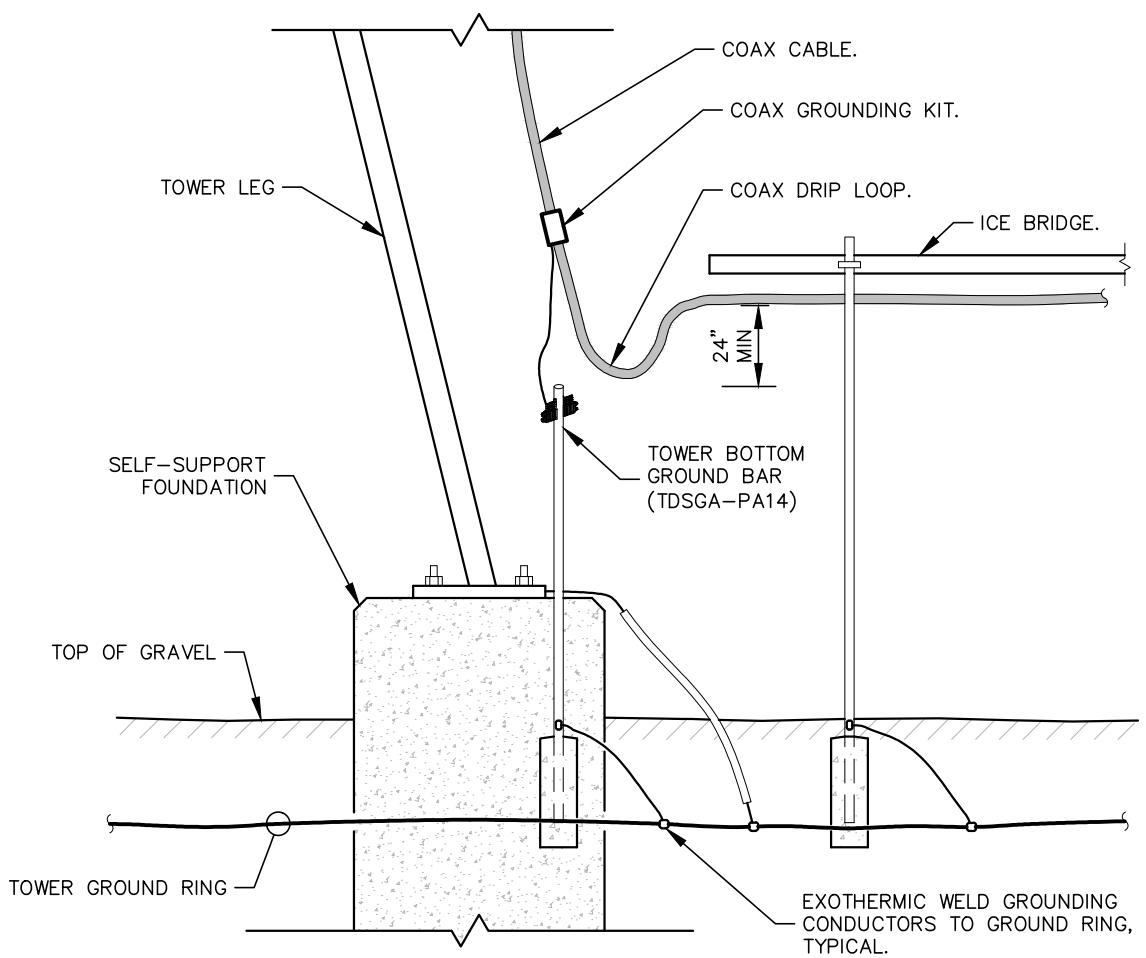

1 / E7 DRIP LOOP DETAIL

NOT TO SCALE

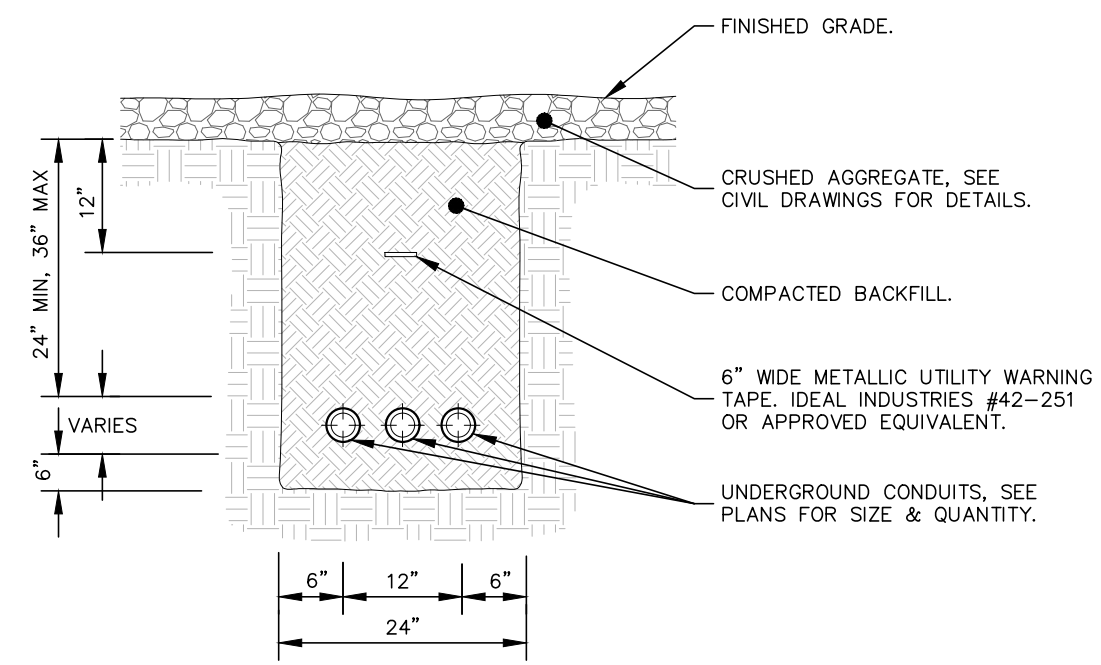

NOTES:
1. IF GROUND SURFACE IS OTHER THAN NEWLY GRAVELED AREA. CONTRACTOR IS TO RESTORE TO ORIGINAL CONDITION.
2. PROVIDE PVC CONDUIT BELOW GRADE EXCEPT AS NOTED BELOW.
3. PROVIDE SCHEDULE 40 OR SCHEDULE 80 PVC CONDUIT & ELBOWS AT STUB UP LOCATIONS (I.E. POLES, EQUIPMENT, ETC.)
4. PROVIDE SCHEDULE 80 PVC CONDUIT BELOW PARKING LOTS AND ROADWAYS.

2 / E7 TYPICAL TRENCH DETAIL

NOT TO SCALE

verizon
10300 OLD ALABAMA ROAD CONNECTOR
ALPHARETTA, GEORGIA 30022

PROJECT INFORMATION:

SITE NAME:
POND FORK
SITE No.: 581347
FUZE PROJECT #: 16350691
4410 HOLLY SPRINGS ROAD
GILLSVILLE, GA 30543
HALL COUNTY

PLANS PREPARED BY:

Kimley»Horn
11720 AMBER PARK DRIVE, SUITE 600
ALPHARETTA, GA 30009
PHONE: 770-619-4280
WWW.KIMLEY-HORN.COM

REV:	DATE:	ISSUED FOR:	BY:
7			
6			
5			
4			
3			
2			
1			
0	05/18/21	CONSTRUCTION	CCH
A	04/29/21	PRELIMINARY	CCH

LICENSER:

GEORGIA REGISTERED No. PE042571 PROFESSIONAL ENGINEER CORBIN C HARDY 5/24/21

KHA PROJECT NUMBER:
013509266

DRAWN BY:	CHECKED BY:
TDM	TRN

SHEET TITLE:
ELECTRICAL DETAILS

SHEET NUMBER:
E7

K:\ATL_Wireless\000_Verizon\2020 Sites\Pond Fork A\CAD\CD\GA-GB.dwg ---- 05/18/21 5:48 PM by: Tim.Merchant

This document, together with the concepts and designs presented herein, as an instrument of service, is intended only for the specific purpose and client for which it was prepared. Reuse of and improper reliance on this document without written authorization and adaptation by Kimley-Horn and Associates, Inc. shall be without liability to Kimley-Horn and Associates, Inc.

Copyright Kimley-Horn and Associates, Inc., 2021

GROUNDING NOTES

1. THE GROUND RING SHALL CONSIST OF #2 AWG BARE SOLID TINNED COPPER (STC) CONDUCTOR, UNLESS NOTED OTHERWISE, BURIED AT 30" BELOW FINISHED GRADE (OR BELOW FROST LINE). LOCATE 24" MINIMUM AND 36" MAXIMUM FROM EQUIPMENT AREA AND FROM TOWER FOUNDATION. ALL CONNECTIONS SHALL BE MADE USING A PARALLEL TYPE EXOTHERMIC WELD, UNLESS NOTED OTHERWISE.

2. INSTALL GROUND RODS AS SHOWN AND AS REQUIRED. GROUND RODS TO BE COPPER CLAD STEEL, 5/8" DIAMETER AND 10FT IN LENGTH. SPACING BETWEEN GROUND RODS SHALL BE 10FT MINIMUM AND 15FT MAXIMUM. TOP OF GROUND ROD TO BE 30" MINIMUM BELOW GRADE (OR BELOW FROST LINE). BOND TOP OF GROUND ROD TO GROUND WIRE WITH EXOTHERMIC WELD. DO NOT EXOTHERMICALLY WELD ANYTHING TO GROUND ROD EXCEPT GROUND WIRE WHICH PASSES OVER TOP OF GROUND ROD (CLAMPED CONNECTIONS TO GROUND ROD PER TOWER MANUFACTURERS DETAILS ARE ACCEPTABLE).

3. EQUIPMENT GROUND RING SHALL HAVE A MINIMUM OF 4 GROUND RODS, INSTALLED AT THE CORNERS OF THE GROUND RING PLUS ADDITIONAL RODS AS REQUIRED TO COMPLY WITH THE SPACING REQUIREMENTS. TOWER GROUND RING SHALL HAVE A MINIMUM OF 3 GROUND RODS, EXCEPT USE 4 RODS AT A MONOPOLE TOWER. WHERE SPREAD TOWER FOOTING WOULD PREVENT GROUND RODS FROM BEING DRIVEN INTO SOIL ADJACENT TO TOWER, PROVIDE VERTICAL 1" DIAMETER PVC SLEEVES EMBEDDED IN FOOTING TO ALLOW INSTALLATION OF GROUND RODS.

4. EQUIPMENT GROUND RING AND TOWER GROUND RING SHALL BE BONDED TOGETHER WITH TWO #2 STC GROUND LEADS, TYPICALLY ONE ON EACH SIDE OF ICE BRIDGE.

5. BOND TOWER TO TOWER GROUND RING AT THREE LOCATIONS WITH #2 STC GROUND LEAD. SELF SUPPORT TOWERS SHALL HAVE EACH LEG BONDED TO GROUND RING, MONOPOLES AND GUYED TOWERS SHALL HAVE GROUND LEADS EQUALLY SPACED AROUND TOWER. EXOTHERMICALLY WELD GROUND LEADS TO TOP OF BASE PLATES, OR ATTACH TO TOWER USING TOWER MANUFACTURER PROVIDED DETAIL.

6. PROVIDE #2 STC RADIALS FROM THE TOWER GROUND RING TO EACH FENCE CORNER POST. RADIALS SHALL HAVE GROUND RODS AS PER THE REQUIRED SPACING. THE GROUND ROD AT THE END OF EACH RADIAL SHALL BE 24" MAXIMUM FROM FENCE CORNER POST. EQUIPMENT AREA GROUND RING AND CONNECTING GROUND LEADS [BETWEEN EQUIPMENT AREA AND TOWER GROUND RINGS] MAY BE USED AS PART OF THE RADIAL GOING TO THE FENCE CORNER POST CLOSEST TO THE EQUIPMENT AREA.

7. MINIMUM BEND RADIUS FOR #2 AWG GROUND WIRE IS 12", EXCEPT USE 24" FOR TOWER GROUND RINGS AND EQUIPMENT PAD GROUND RINGS.

8. GROUND ALL EXTERIOR EXPOSED METAL OBJECTS. USE TWO HOLE LUGS FOR CONNECTION TO FLAT METAL SURFACES. USE ONLY STAINLESS STEEL HARDWARE ON ALL MECHANICAL CONNECTIONS. CLEAN ALL SURFACES (AND STRIP PAINTED SURFACES) TO BARE BRIGHT METAL PRIOR TO MAKING GROUND CONNECTIONS. APPLY ANTI-OXIDE COMPOUND TO ALL CONNECTIONS. APPLY ZINC RICH PAINT (COLD GALV.) TO ALL EXOTHERMIC WELDS, AND TO ANY METAL EXPOSED BY CLEANING, STRIPPING, GRINDING, CUTTING OR DRILLING.

9. ALL GROUNDING CONDUCTORS ABOVE GRADE SHALL BE RUN IN 3/4" FLEXIBLE PVC CONDUIT. CONDUIT SHALL BEGIN WITHIN 3/4" OF ABOVE GROUND CONNECTION POINT, SHALL EXTEND 24" BELOW GRADE MINIMUM, AND SHALL BE FILLED WITH SEALANT AT ABOVE GROUND CONNECTION POINT. SECURE CONDUIT EVERY 24" ON VERTICAL RUNS AND EVERY 36" ELSEWHERE WITH NON-METALLIC TIES.

10A. AT GUYED AND SELF SUPPORT TOWERS MOUNT TDSGA-PA14 TOWER BOTTOM GROUND BAR ON DEDICATED POST DIRECTLY BELOW COAX CABLES COMING OFF TOWER. POST TO BE 3.5" OD GALVANIZED SCHEDULE 40 PIPE WITH GALVANIZED PIPE CAP. TOP OF POST TO BE 78" ABOVE GRADE. EMBED POST 30" MINIMUM IN 12" DIAMETER BY 36" DEEP MINIMUM CONCRETE FOOTING WITH TOP OF FOOTING 6" BELOW GRADE. IF TOWER FOUNDATION OBSTRUCTS AUGERED FOOTING, USE POST WITH 10" SQUARE GALVANIZED STEEL FLANGE PLATE WELDED TO BOTTOM AND BOLT FLANGE TO TOP OF CONCRETE TOWER FOOTING.

10B. AT MONOPOLE TOWERS CLAMP TDSGA-BC14 TOWER BOTTOM GROUND BAR DIRECTLY TO TOWER. IF RUNNING COAX INSIDE MONOPOLE, CLAMP ONTO BOTTOM LIP OF EXIT PORT. IF BANDING COAX TO OUTSIDE OF TOWER, CLAMP ONTO STEEL ANGLE WHICH IS BANDED TO TOWER. BOND TDSGA-BC14 TO TOWER GROUND RING WITH TWO #2 STC LEADS LUGGED TO GROUND BAR AND EXOTHERMICALLY WELDED TO GROUND RING.

11. AT EQUIPMENT AREA, INSTALL TDSGA-PA14 EXTERIOR GROUND BAR (THRU-BOLTED STYLE) AT BASE OF (2) INTERIOR H-FRAME POSTS AND AT TOP OF ICE BRIDGE POST WHICH IS NEAREST TO (BUT CLOSER TO TOWER THAN) THE COAX CABLE TERMINATION. MOUNT GROUND BAR TO H-FRAME POSTS AT 6" ABOVE GRAVEL AND TO ICE BRIDGE POST AT 6FT ABOVE GRAVEL.

12. ALL ICE BRIDGE SECTIONS ARE TO BE JUMPERED TOGETHER WITH #2 WIRE, EITHER BARE TINNED COPPER OR GREEN INSULATED STRANDED. ICE BRIDGE SHALL BE GROUNDED AT EACH END WITH #2 STC WIRE LUGGED TO ICE BRIDGE AND EXOTHERMICALLY WELDED TO UPPER PORTION OF NEAREST ICE BRIDGE POST. ICE BRIDGE SECTIONS ABOVE H-FRAME SHALL BE BONDED TO EACH OTHER WITH JUMPERS AT EACH END – THIS ASSEMBLY WILL BE CONSIDERED AS A SINGLE ICE BRIDGE SECTION FOR GROUNDING PURPOSES.

13. BOND EACH ICE BRIDGE POST, H-FRAME POST OR DEDICATED GROUNDING POST TO BURIED GROUNDING SYSTEM WITH #2 STC LEAD EXOTHERMICALLY WELDED TO POST BELOW TOP OF GRAVEL AND EXOTHERMICALLY WELDED TO GROUND RING. EACH POST TO HAVE SEPARATE GROUND LEAD DIRECTLY TO GROUND RING – DO NOT DAISY CHAIN POSTS TOGETHER.

14. BOND EACH RF CABINET TO EQUIPMENT GROUND RING WITH #2 AWG TINNED SOLID BARE COPPER CONDUCTOR LUGGED TO CABINET BODY AND EXOTHERMICALLY WELDED TO GROUND RING. LUG TO CABINET BODY USING LOCATION AT WHICH STUDS ON CABINET CHASSIS HAVE DIRECT GROUND WIRE CONNECTION TO CABINET INTERNAL GROUND BAR. RUN CONDUIT AND CONDUCTOR ACROSS BACK OF CABINET (DO NOT RUN TOWARDS NEAREST CORNER OF CABINET AND THEN BEND GROUND WIRE SHARPLY), ACROSS CONCRETE PAD BELOW CABLE LADDER, THEN DOWN INTO GRAVEL AREA.

15. BOND EACH BATTERY CABINET TO GROUND RING WITH #2 AWG TINNED SOLID BARE COPPER CONDUCTOR LUGGED TO CABINET BODY AND EXOTHERMICALLY WELDED TO GROUND RING. RUN GROUND LEAD IN FLEX CONDUIT ALONG BACK OF RBA72 CABINET, ACROSS CONCRETE PAD BELOW CABLE LADDER, THEN DOWN INTO GRAVEL AREA. CONNECT TWO HOLE LUG TO BACK OF CABINET AT FACTORY PROVIDED GROUNDING STUDS.

16. BOND GENERATOR TO GROUND RING WITH #2 STC AT TWO DIAGONALLY OPPOSITE LOCATIONS BY DRILLING AND BOLTING TWO HOLE LUG TO FINS ON GENERATOR BASE STRUCTURE. GROUND LEADS SHOULD TAKE SHORTEST PATH ACROSS CONCRETE PAD TO GRAVEL AREA, THEN CONTINUE TO GROUND RING.

17. WHERE PROPANE TANK IS INSTALLED TO FUEL GENERATOR, BOND PROPANE TANK TO GROUND RING WITH A SINGLE #2 STC CLAMPED TO FILLER PIPE OF PROPANE TANK AND EXOTHERMICALLY WELDED TO GROUND RING. GROUND LEAD SHOULD RUN TO TANK SUPPORT AND TAKE SHORTEST PATH ACROSS CONCRETE PAD TO GRAVEL AREA, THEN CONTINUE TO GROUND RING. IF PROPANE TANK FUEL LINE IS METALLIC AND CROSSES EQUIPMENT GROUND RING, BOND FUEL LINE TO EQUIPMENT GROUND RING WHERE THE TWO LINES CROSS WITH A SINGLE #2 STC CLAMPED TO FUEL LINE AND EXOTHERMICALLY WELDED TO GROUND RING.

18. BOND GPS ANTENNA and GPS ANTENNA MOUNT TO TSDGA GROUND BAR AT BOTTOM OF H-FRAME POST WITH #2 GREEN INSULATED STRANDED GROUND WIRE.

19. PROVIDE TWO GROUND RODS OUTSIDE GATES OF COMPOUND. DISTANCE BETWEEN GROUND RODS SHALL MATCH WIDTH OF GATE OPENING, AND DISTANCE FROM FENCE SHALL MATCH LENGTH OF LONGEST INDIVIDUAL GATE LEAF. BOND GATE POSTS TOGETHER WITH #2 STC LEAD WHICH RUNS PAST AND CONNECTS TO GROUND RODS OUTSIDE GATES.

20. BOND EACH GATE POST WITH #2 STC TO NEAREST PORTION OF GROUNDING SYSTEM INSIDE COMPOUND.

21. BOND EACH GATE TO GATE POST WITH FLEXIBLE INSULATED OR BRAIDED #4/0 COPPER STRAP. EXOTHERMICALLY WELD STRAP TO BOTH GATE AND GATE POSTS.

22. ANY METAL FENCE POST WITHIN 6FT OF A GROUNDED METAL OBJECT SHALL BE BONDED TO THE NEAREST GROUND RING. ANY METAL FENCE WITHIN 6FT OF A GROUND RING SHALL HAVE THE LINE POSTS BONDED TO THE GROUND RING AT 20FT MAXIMUM INTERVALS AS MEASURED ALONG THE LENGTH OF THE FENCE.

23. WHERE GROUND BASED RRU'S, RAYCAP OVP'S OR DIPLEXERS ARE INSTALLED AT THE EQUIPMENT AREA, BOND EACH COMPONENT TO NEAREST TDSGA GROUND BAR BELOW THE COMPONENT WITH #2 GREEN INSULATED STRANDED GROUND WIRE. SINGLE HOLE LUG OR RING TYPE CONNECTOR IS SUITABLE FOR CONNECTION TO GROUNDING STUD ON EACH COMPONENT.

24. NOTIFY VZW CM TO INSPECT GROUND RING BEFORE BACKFILLING. CONTRACTOR SHALL HIRE A 3RD PARTY TO PERFORM AN IEEE81 FALL OF POTENTIAL METHOD GROUND TEST. MAXIMUM ALLOWABLE RESISTANCE TO GROUND IS 5 OHMS. PROVIDE ADDITIONAL GROUND SYSTEM COMPONENTS AS REQUIRED TO ACHIEVE THIS VALUE.

25. REFER TO TOWER GROUNDING DIAGRAM AND NOTES FOR GROUND SYSTEM REQUIREMENTS ON THE TOWER.

26. GROUNDING OF ALL ELECTRICAL EQUIPMENT SHALL BE AS PER NEC, MUNICIPAL AND UTILITY COMPANY REQUIREMENTS.

verizon✓
10300 OLD ALABAMA ROAD CONNECTOR
ALPHARETTA, GEORGIA 30022

PROJECT INFORMATION:

SITE NAME:
POND FORK
SITE No.: 581347
FUZE PROJECT #: 16350691
4410 HOLLY SPRINGS ROAD
GILLSVILLE, GA 30543
HALL COUNTY

PLANS PREPARED BY:

Kimley»Horn
11720 AMBER PARK DRIVE, SUITE 600
ALPHARETTA, GA 30009
PHONE: 770-619-4280
WWW.KIMLEY-HORN.COM

REV:	DATE:	ISSUED FOR:	BY:
7			
6			
5			
4			
3			
2			
1			
0	05/18/21	CONSTRUCTION	CCH
A	04/29/21	PRELIMINARY	CCH

LICENSER:

GEORGIA REGISTERED No. PE042571 PROFESSIONAL ENGINEER CORBIN C HARDY 5/24/21

KHA PROJECT NUMBER:
013509266

DRAWN BY: TDM
CHECKED BY: TRN

SHEET TITLE:
GROUNDING NOTES

SHEET NUMBER:
E8

K:\ATL_Wireless\000_Verizon\2020 Sites\Pond Fork A\CAD\CD\GA-GB.dwg ---- 05/18/21 5:48 PM by: Tim.Merchant

This document, together with the concepts and designs presented herein, as an instrument of service, is intended only for the specific purpose and client for which it was prepared. Reuse of and improper reliance on this document without written authorization and adaptation by Kimley-Horn and Associates, Inc. shall be without liability to Kimley-Horn and Associates, Inc.

Copyright Kimley-Horn and Associates, Inc., 2021

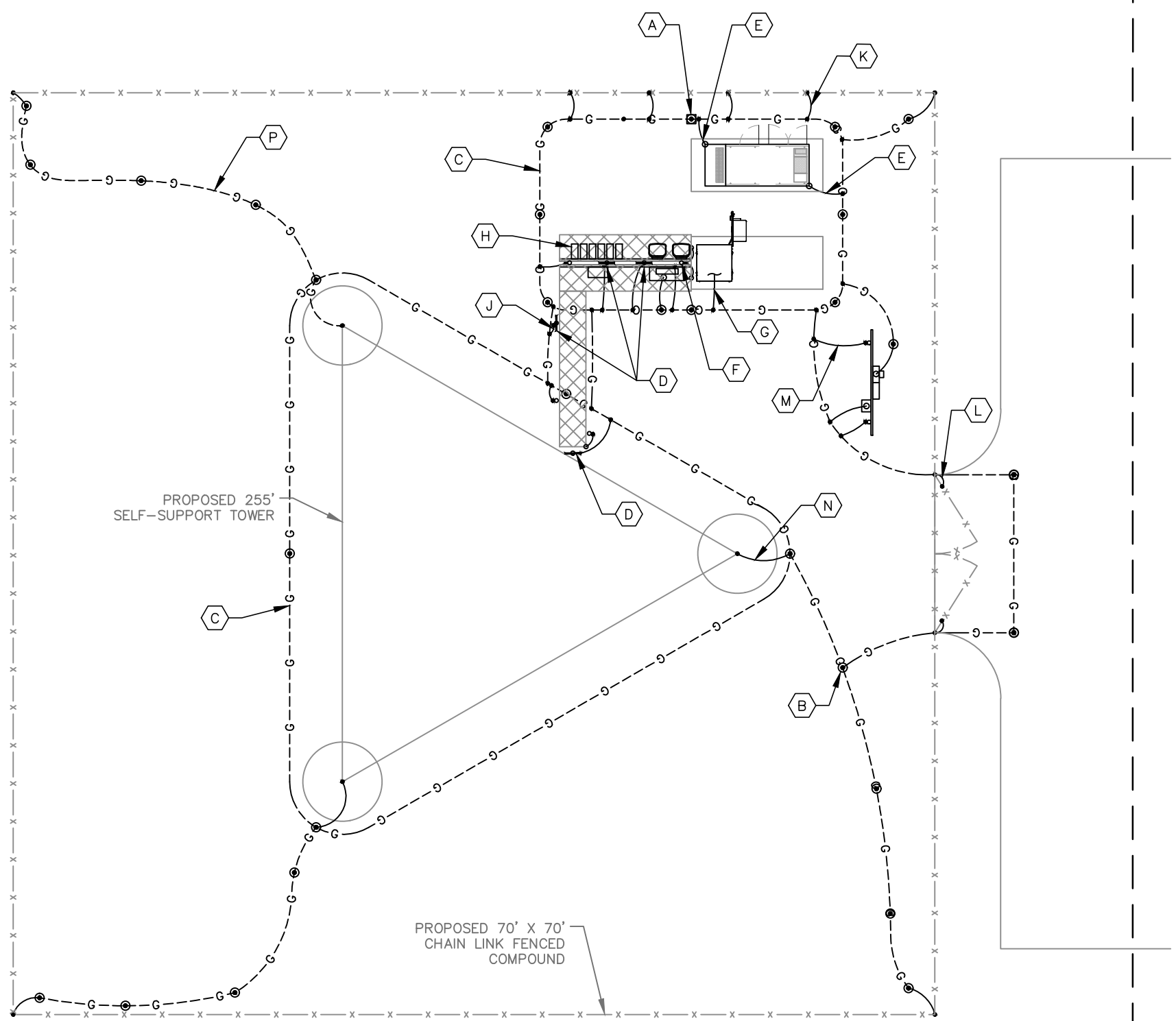

1 / E9 GROUNDING PLAN

SCALE: 1" = 10'

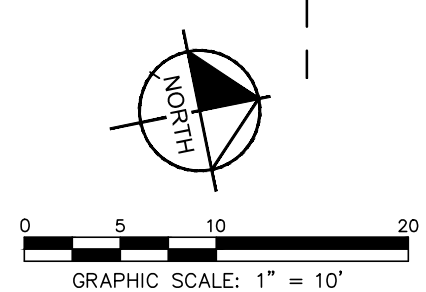

KEY NOTES - GROUNDING EQUIPMENT

- (A) GROUND ROD TEST WELL (SEE DETAIL 1/E11).
- (B) GROUND ROD, TYPICAL (SEE DETAIL 2/E11 AND NOTES 2 AND 3 ON E8).
- (C) TOWER AND EQUIPMENT GROUND RING (SEE NOTES 1, 3, 4, 5, 6 AND 7 ON E8).
- (D) TDSGA–PA14 OR TDSGA–BC14 WHERE APPLICABLE (SEE NOTES 10 AND 11 ON E8).
- (E) GENERATOR GROUNDING (SEE NOTE 16 ON E8).
- (F) GPS ANTENNA GROUNDING (SEE NOTE 18 ON E8).
- (G) RF CABINET GROUNDING (SEE NOTE 14 ON E8).
- (H) RRU'S AND OVP'S GROUNDING (SEE NOTE 23 ON E8).
- (J) ICE BRIDGE POST BOND TO GROUND RING, TYPICAL (SEE NOTES 12 AND 13 ON E8).
- (K) FENCE POST GROUNDING, TYPICAL. (SEE NOTE 22 ON E8).
- (L) GATE GROUNDING, TYPICAL. (SEE NOTES 19, 20 & 21 ON E8).
- (M) UTILITY H–FRAME GROUNDING, TYPICAL. (SEE SHEET E4 AND NOTE 13 ON E8).
- (N) TOWER GROUNDING, TYPICAL. (SEE NOTES 5, 6 & 25 ON E8).
- (P) GROUND RADIALS, TYPICAL (SEE NOTE 6 ON E8).
- (Q) REFER TO SHEETS E8, E10, E11 & E12 FOR GROUNDING NOTES, DETAILS, AND SPECIFICATIONS.

LEGEND:

----G----G—	GROUND RING
----G—⊙—G—	GROUND ROD EXOTHERMICALLY WELDED TO GROUND RING
●	EXOTHERMIC WELD
⊙	GROUND ROD TEST WELL (SEE DETAIL 1/E11)
—⊙	MECHANICAL CONNECTION

verizon
10300 OLD ALABAMA ROAD CONNECTOR
ALPHARETTA, GEORGIA 30022

PROJECT INFORMATION:

SITE NAME:
POND FORK
SITE No.: 581347
FUZE PROJECT #: 16350691
4410 HOLLY SPRINGS ROAD
GILLSVILLE, GA 30543
HALL COUNTY

PLANS PREPARED BY:

Kimley»Horn
11720 AMBER PARK DRIVE, SUITE 600
ALPHARETTA, GA 30009
PHONE: 770–619–4280
WWW.KIMLEY–HORN.COM

REV: DATE: ISSUED FOR: BY:

7			
6			
5			
4			
3			
2			
1			
0	05/18/21	CONSTRUCTION	CCH
A	04/29/21	PRELIMINARY	CCH

LICENSER:

GEORGIA REGISTERED No. PE042576 PROFESSIONAL ENGINEER CORBIN C HARDY 5/24/21

KHA PROJECT NUMBER: 013509266

DRAWN BY: TDM CHECKED BY: TRN

SHEET TITLE: GROUNDING PLAN

SHEET NUMBER: E9

K:\ATL_Wireless\000_Verizon\2020 Sites\Pond Fork A\CAD\CD\GA-GB.dwg ---- 05/18/21 5:48 PM by: Tim.Merchant

This document, together with the concepts and designs presented herein, as an instrument of service, is intended only for the specific purpose and client for which it was prepared. Reuse of and improper reliance on this document without written authorization and adaptation by Kimley–Horn and Associates, Inc. shall be without liability to Kimley–Horn and Associates, Inc.

Copyright Kimley–Horn and Associates, Inc., 2021

KEY NOTES - ELECTRICAL EQUIPMENT

1. #6 AWG INSULATED STRANDED COPPER.
2. #6 AWG INSULATED STRANDED COPPER. CONNECT COAX GROUND KITS DIRECTLY TO TOWER TOP CIGBE ONLY.
3. #2 AWG SOLID TINNED COPPER.
4. #2 AWG SOLID TINNED COPPER. (IF GROUNDING POST NOT AVAILABLE)
5. #2 AWG SOLID TINNED COPPER GROUND RING BURIED 30" BELOW GRADE.
6. TOWER ACTS AS CONDUCTOR.
7. TOWER GROUND BARS WILL BE ISOLATED FROM TOWER BUT BONDED TO TOWER WITH #2 AWG INSULATED STRANDED COPPER AND CLAMPED, OR EXOTHERMIC WELD, UNLESS OTHERWISE NOTED.
8. 4/0 BRAIDED COPPER STRAP, EXOTHERMIC WELD TO BOTH GATE AND GATE POST.
9. BOND GROUND BAR TO GROUNDING POST USING THROUGH BOLT CONNECTION.
10. #2 AWG INSULATED STRANDED COPPER.

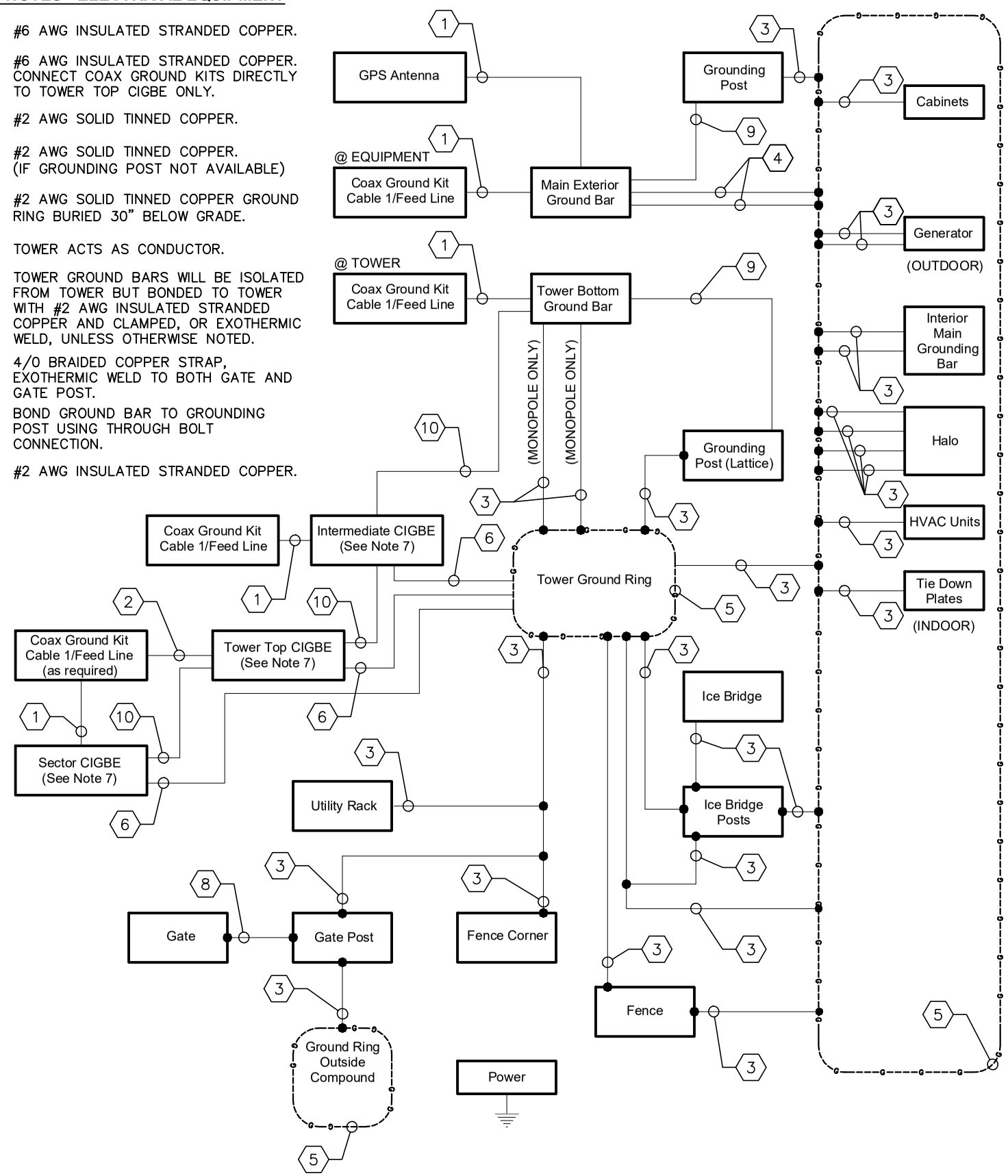

1 / E10 GROUNDING SINGLE LINE DIAGRAM

NOT TO SCALE

KEY NOTES - CONDUIT, CONDUCTORS, & MISC

A. PROPOSED ANTENNA.

B. COAX OR HYBRID CABLE GROUNDING KIT, TYPICAL. GROUNDING KITS ARE REQUIRED EVERY 75 FT MAXIMUM EXCEPT WHERE COAX IS CONCEALED INSIDE MONOPOLE OR OTHER INACCESSIBLE SPACE.

C. #6 AWG INSULATED GROUNDING CONDUCTOR FROM COAX GROUND KIT TO TOWER GROUND BAR, TYPICAL.

D. SECTOR CIGBE GROUND BAR, PROVIDE ONE PER SECTOR NEXT TO ANTENNAS (OPTIONAL ON GUYED TOWERS) AND ISOLATED FROM TOWER. BOND TO TOWER OR SECTOR FRAME WITH #2 AWG SOLID TINNED COPPER AND APPROVED CLAMP. (SEE NOTE P BELOW)

E. TOWER TOP CIGBE GROUND BAR MOUNTED TO TOWER WHERE COAX CABLES LEAVE VERTICAL WAVE GUIDE SUPPORT OR COMMON CABLE TRAY. TYPICALLY OCCURS ON GUY TOWERS (IN LIEU OF SECTOR CIGBE'S), ROOFTOPS, OR ON WATER TANKS (THRU-BOLTED TO MESSENGER PIPE) IN ORDER TO MAINTAIN 75 FEET MAXIMUM DISTANCE BETWEEN COAX GROUND KITS. ISOLATE CIGBE FROM TOWER AND BOND TO TOWER WITH #2 AWG BARE SOLID TINNED COPPER AND APPROVED CLAMP. (SEE NOTE P BELOW)

F. COAX OR HYBRID CABLE.

G. #2 AWG INSULATED, STRANDED COPPER. (SEE NOTE P BELOW)

H. INTERMEDIATE CIGBE GROUND BAR MOUNTED TO TOWER BELOW AND WITHIN 3 FEET OF COAX GROUND KITS AND ISOLATED FROM TOWER (THRU-BOLTED TO MESSENGER PIPE ON WATER TANKS). BOND TO TOWER WITH #2 AWG BARE SOLID TINNED COPPER AND APPROVED CLAMP. (SEE NOTE P BELOW)

J. TOWER BOTTOM GROUND BAR TDSGA-PA14 ON DEDICATED STEEL POST WHERE POSSIBLE; OTHERWISE TDSGA-BC14 CLAMPED DIRECTLY TO TOWERS STEEL (THRU-BOLTED TO MESSENGER PIPE ON WATER TANKS).

K. #2 AWG BARE STRANDED TINNED COPPER GROUNDING CONDUCTOR WHEN USING TDSGA-BC14. TYPICAL TWO CONNECTIONS TO GROUND RING.

L. #2 AWG SOLID TINNED COPPER TOWER GROUND RING.

M. DRIP LOOP.

N. TO SHELTER/RF CABINETS.

P. IF UNABLE TO CLAMP #2 AWG BARE SOLID TINNED COPPER TO METAL STRUCTURE, THEN RUN #2 AWG INSULATED STRANDED TINNED COPPER FROM CIGBE TO NEXT LOWEST CIGBE.

Q. PROPOSED RRU AND DIPLEXER (IF USED).

R. PROPOSED RAYCAP.

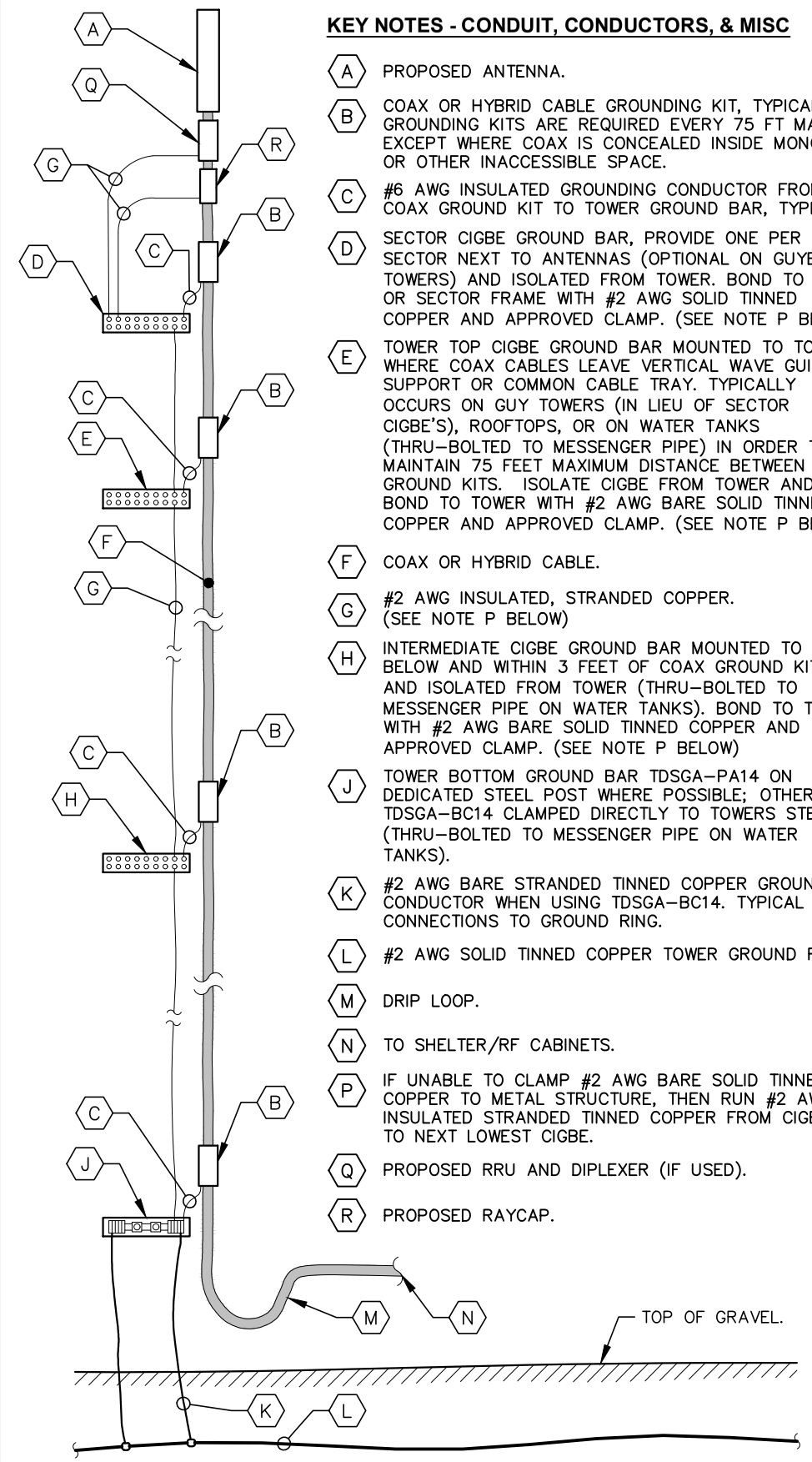

2 / E10 COAX-TOWER GROUNDING SCHEMATIC

NOT TO SCALE

verizon

10300 OLD ALABAMA ROAD CONNECTOR
ALPHARETTA, GEORGIA 30022

PROJECT INFORMATION:

SITE NAME:
POND FORK
SITE No.: 581347
FUZE PROJECT #: 16350691

4410 HOLLY SPRINGS ROAD
GILLSVILLE, GA 30543
HALL COUNTY

PLANS PREPARED BY:

Kimley»Horn

11720 AMBER PARK DRIVE, SUITE 600
ALPHARETTA, GA 30009
PHONE: 770-619-4280
WWW.KIMLEY-HORN.COM

REV:	DATE:	ISSUED FOR:	BY:
7			
6			
5			
4			
3			
2			
1			
0	05/18/21	CONSTRUCTION	CCH
A	04/29/21	PRELIMINARY	CCH

LICENSER:

GEORGIA REGISTERED No. PE042571 PROFESSIONAL ENGINEER CORBIN C HARDY 5/24/21

KHA PROJECT NUMBER:
013509266

DRAWN BY: TDM
CHECKED BY: TRN

SHEET TITLE:
GROUNDING SINGLE LINE DIAGRAM

SHEET NUMBER:
E10

K:\ATL_Wireless\000_Verizon\2020 Sites\Pond Fork A\CAD\CD\GA-GB.dwg ---- 05/18/21 5:48 PM by: Tim.Merchant

This document, together with the concepts and designs presented herein, as an instrument of service, is intended only for the specific purpose and client for which it was prepared. Reuse of and improper reliance on this document without written authorization and adaptation by Kimley-Horn and Associates, Inc. shall be without liability to Kimley-Horn and Associates, Inc.

Copyright Kimley-Horn and Associates, Inc., 2021

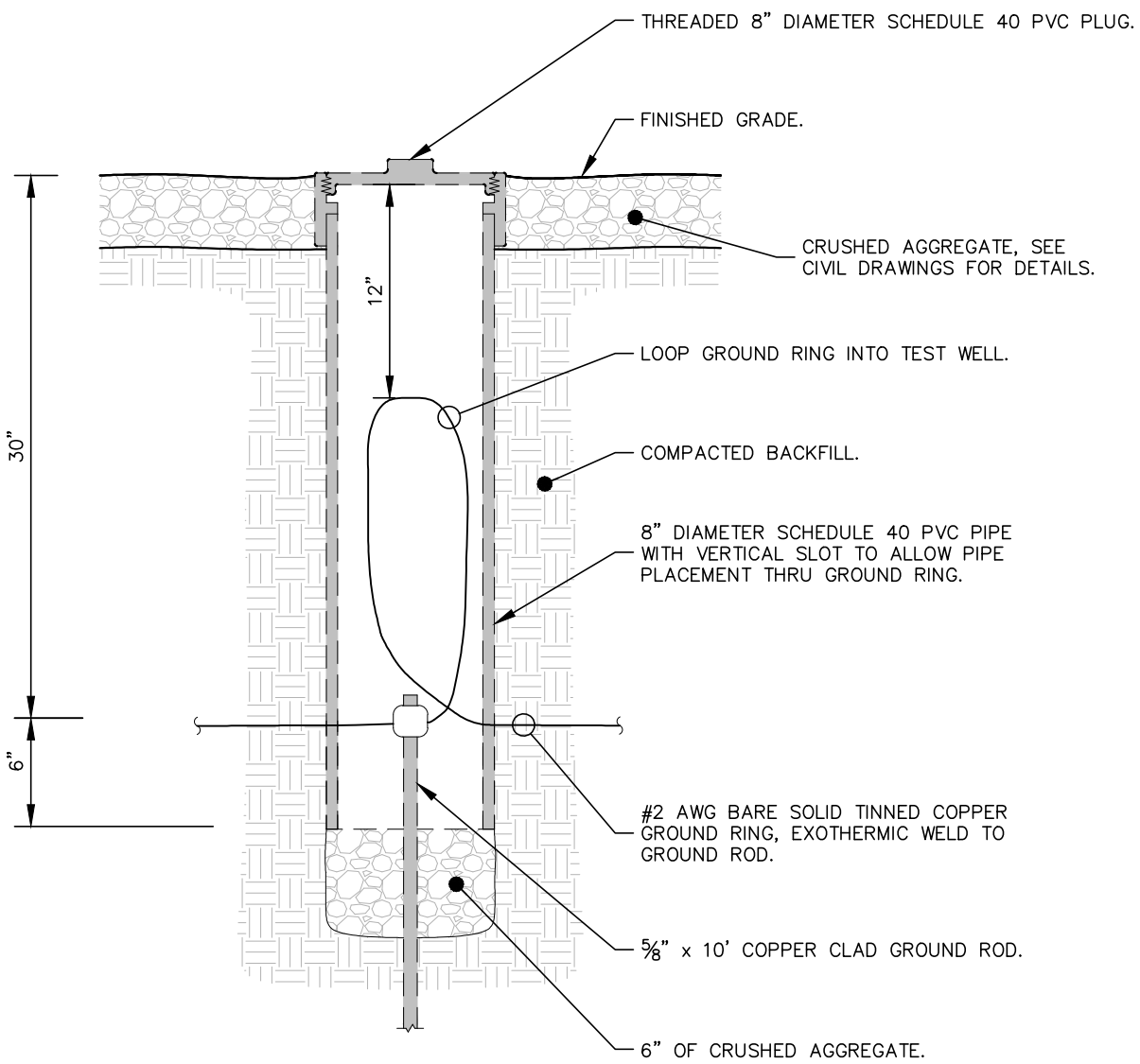

1 / E11 GROUND ROD TEST WELL DETAIL

NOT TO SCALE

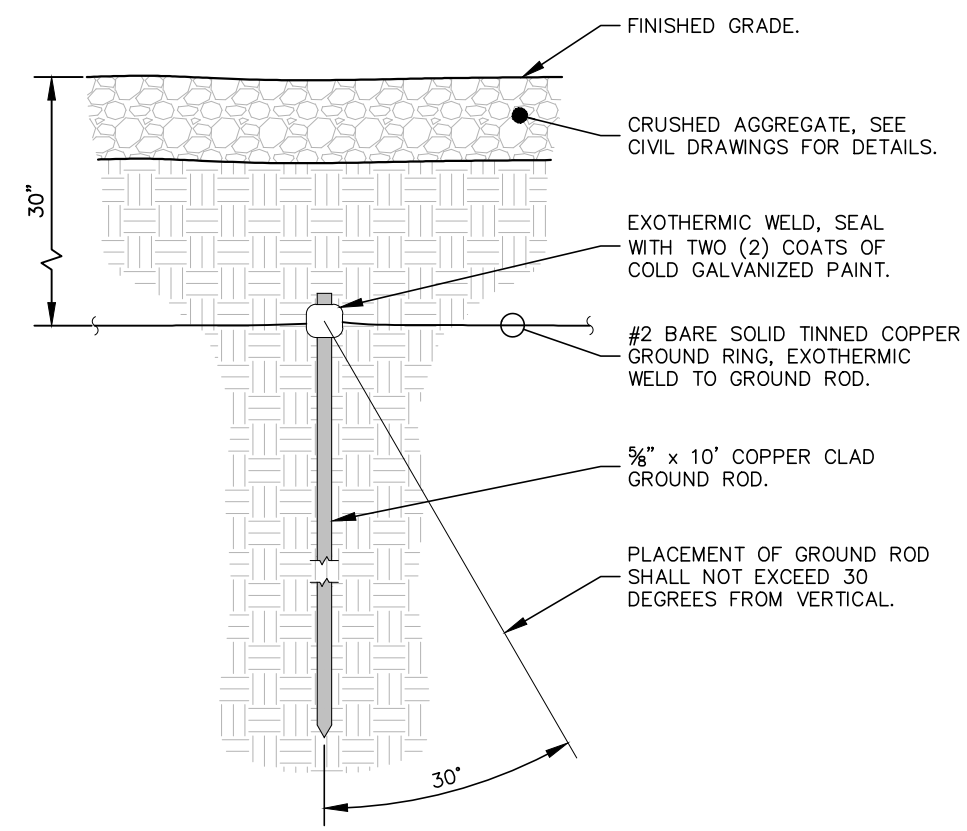

2 / E11 GROUND ROD INSTALLATION DETAIL

NOT TO SCALE

verizon

10300 OLD ALABAMA ROAD CONNECTOR
ALPHARETTA, GEORGIA 30022

PROJECT INFORMATION:

SITE NAME:
POND FORK
SITE No.: 581347
FUZE PROJECT #: 16350691

4410 HOLLY SPRINGS ROAD
GILLSVILLE, GA 30543
HALL COUNTY

PLANS PREPARED BY:

Kimley»Horn

11720 AMBER PARK DRIVE, SUITE 600
ALPHARETTA, GA 30009
PHONE: 770-619-4280
WWW.KIMLEY-HORN.COM

REV:	DATE:	ISSUED FOR:	BY:
7			
6			
5			
4			
3			
2			
1			
0	05/18/21	CONSTRUCTION	CCH
A	04/29/21	PRELIMINARY	CCH

LICENSER:

GEORGIA REGISTERED No. PE042571 PROFESSIONAL ENGINEER CORBIN C HARDY 5/24/21

KHA PROJECT NUMBER:
013509266

DRAWN BY:	CHECKED BY:
TDM	TRN

SHEET TITLE:
GROUNDING DETAILS

SHEET NUMBER:
E11

K:\ATL_Wireless\000_Verizon\2020 Sites\Pond Fork A\CAD\CD\GA-GB.dwg ---- 05/18/21 5:49 PM by: Tim.Merchant

This document, together with the concepts and designs presented herein, as an instrument of service, is intended only for the specific purpose and client for which it was prepared. Reuse of and improper reliance on this document without written authorization and adaptation by Kimley-Horn and Associates, Inc. shall be without liability to Kimley-Horn and Associates, Inc.

Copyright Kimley-Horn and Associates, Inc., 2021

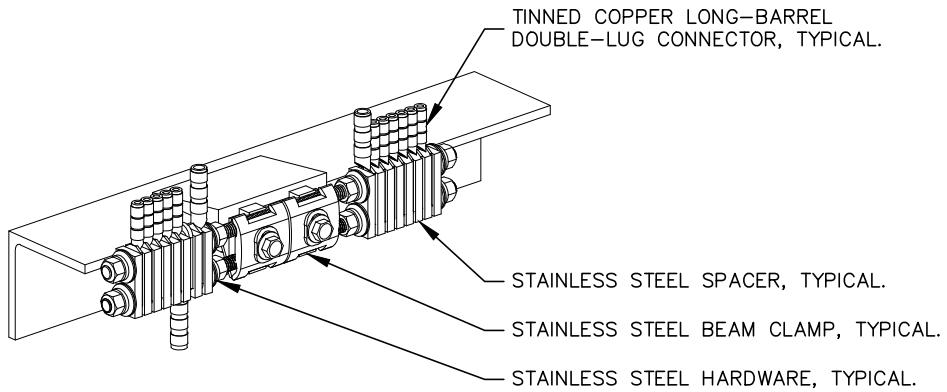

1 / E12 BAR NONE GROUNDED BEAM CLAMP (TDSGA-BC14)

NOT TO SCALE

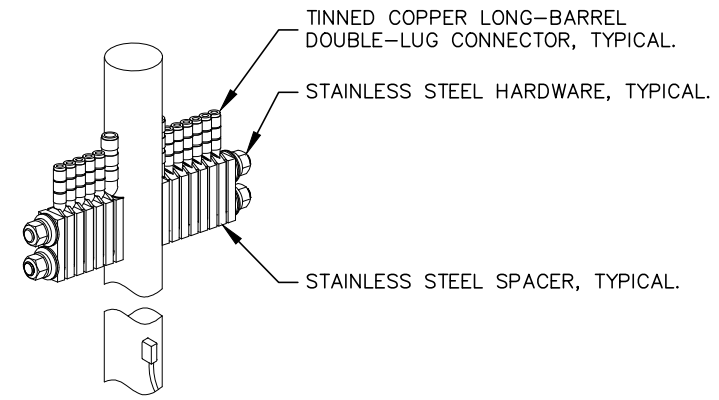

2 / E12 BAR NONE POST MOUNTED (TDSGA-PA14)

NOT TO SCALE

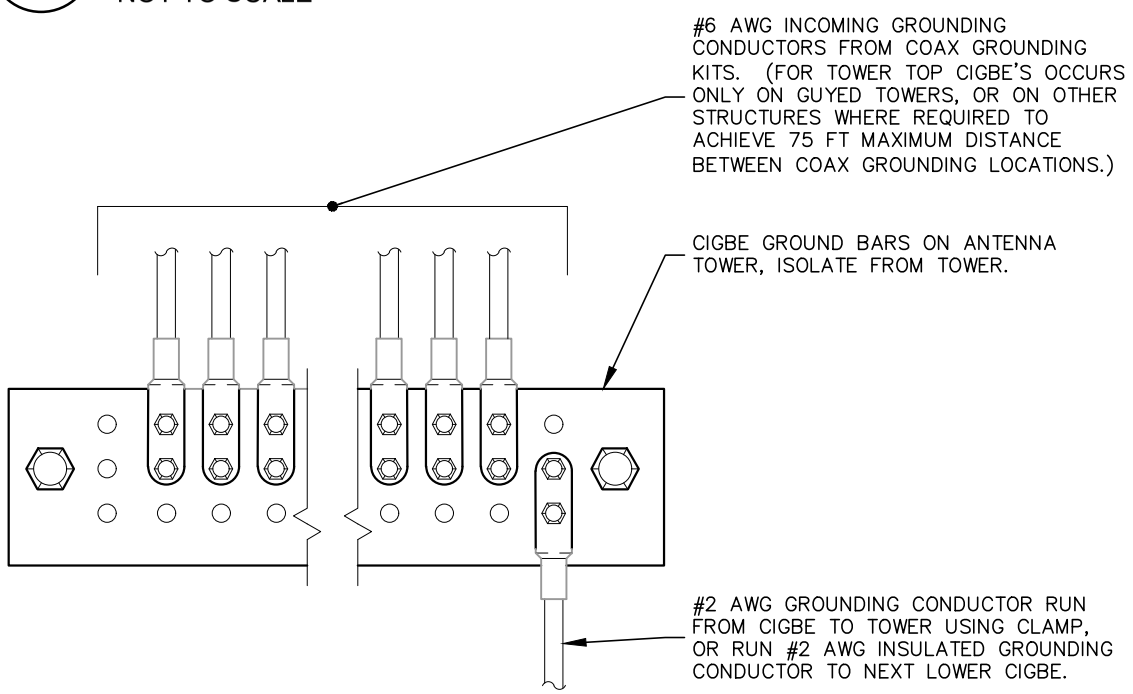

3 / E12 ANTENNA GROUND WIRE INSTALLATION DETAIL

NOT TO SCALE

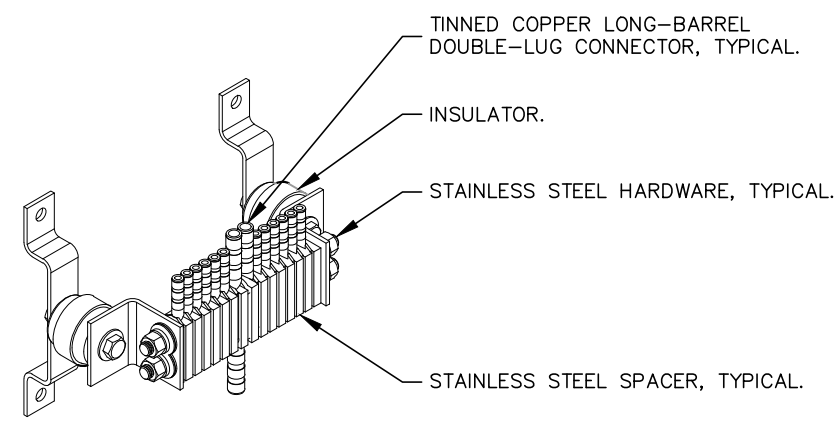

4 / E12 BAR NONE INSULATED (TDSGA-WB17)

NOT TO SCALE

NOTES:

1. ALL CIGBE GROUND BARS ON TOWER ARE TO BE ERICO TDSGA. TYPICALLY USE TDSGA–WB17 ISOLATED FROM UNISTRUT BRACKET.

2. IF CIGBE CANNOT BE CONNECTED TO TOWER WITH #2 AWG GROUNDING CONDUCTOR, VIA CLAMP OR EXOTHERMIC WELD, THEN RUN #2 AWG BLACK GROUND LEAD FROM CIGBE DOWN TO NEXT LOWER CIGBE. SECURE GROUND LEAD WITH NON–METALIC TIES AT SAME SPACING AS COAX SUPPORTS.

verizon
10300 OLD ALABAMA ROAD CONNECTOR
ALPHARETTA, GEORGIA 30022

PROJECT INFORMATION:

SITE NAME:
POND FORK
SITE No.: 581347
FUZE PROJECT #: 16350691
4410 HOLLY SPRINGS ROAD
GILLSVILLE, GA 30543
HALL COUNTY

PLANS PREPARED BY:

Kimley»Horn
11720 AMBER PARK DRIVE, SUITE 600
ALPHARETTA, GA 30009
PHONE: 770–619–4280
WWW.KIMLEY–HORN.COM

REV:	DATE:	ISSUED FOR:	BY:
7			
6			
5			
4			
3			
2			
1			
0	05/18/21	CONSTRUCTION	CCH
A	04/29/21	PRELIMINARY	CCH

LICENSER:

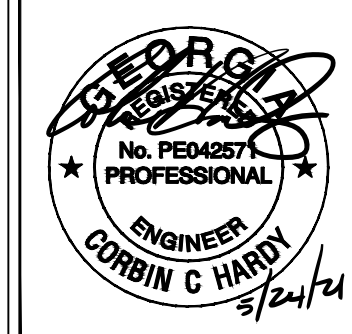

KHA PROJECT NUMBER: 013509266

DRAWN BY: TDM CHECKED BY: TRN

SHEET TITLE: GROUNDING DETAILS

SHEET NUMBER: E12

K:\ATL_Wireless\000_Verizon\2020 Sites\Pond Fork A\CAD\CD\GA-GB.dwg ---- 05/18/21 5:49 PM by: Tim.Merchant

This document, together with the concepts and designs presented herein, as an instrument of service, is intended only for the specific purpose and client for which it was prepared. Reuse of and improper reliance on this document without written authorization and adaptation by Kimley–Horn and Associates, Inc. shall be without liability to Kimley–Horn and Associates, Inc.

Copyright Kimley–Horn and Associates, Inc., 2021