HALL COUNTY BOARD OF COMMISSIONERS
VOTING MEETING AGENDA

Hall County Government Center 2nd Floor
2875 Browns Bridge Road
Gainesville, GA 30504
Streamed Live on Hall County Government's Website - www.hallcounty.org
Thursday, July 13, 2023 - 06:00 PM

Call to Order

Approve Agenda

Invocation

1 Chairman Richard Higgins

Pledge

2 Commissioner Kathy Cooper

Public Comments - Agenda Items Only (2 minutes per speaker/20 minutes maximum)

Proclamation/s

3 Approve the proclamation recognizing Damon Gowan's retirement after 25 years of service to Hall County, Georgia.

4 Approve the Proclamation recognizing Dustin Cleveland's retirement after 20 years of service to Hall County, Georgia.

Consent Agenda

5 Approve the July 10, 2023 Work Session minutes.

6 Approve the June 21, 2023 Voting Meeting minutes.

7 Approve the June 21, 2023 Executive Session minutes.

8 Approve the June 21, 2023 Meeting minutes.

9 Approve the award of IFB #021-44 Furnish and Install New Playground Equipment at Cool Springs Park for Parks & Leisure to Bliss Products and Services, Inc. of Lithia Springs, GA, in the amount of $199,872.31.

10 Approve the amendment to the November 17, 2022 Meeting Minutes regarding item 17 (Application of Atlas Development Services, Inc.) to correct a scrivener's error.

11 Approval and authorization for the Chairman to execute a resolution consenting to the de-annexation of 4042 Brock Drive, Oakwood, GA, pursuant to O.C.G.A. § 36-36-22, and authorize the Chairman to execute the resolution and any and all documents necessary to consent to the de-annexation, subject to the review and approval by the County Attorney.

12 Approve the Stipulation and Settlement Agreement in the worker's compensation case of Sheriff's Office employee Ernestine Smith, and authorize the Chairman to execute any and all documents necessary to effectuate the settlement, subject to the review and approval by the County Attorney.

13 Approval and authorization for the Chairman to execute an Intergovernmental Agreement with the Town of Braselton, City of Buford, Town of Clermont, City of Flowery Branch, City of Gainesville, City of Gillsville, City of Lula, City of Oakwood, and City of Rest Haven regarding a Transportation Special Purpose Local Option Sales and Use Tax (TSPLOST) and authorization for the Chairman to take any additional action necessary to effectuate the Agreement, subject to review and approval by the County Attorney.

14 Approve the FY 2024 Gainesville-Hall County Economic Development Council Service Contract between Hall County and the Greater Hall Chamber of Commerce in the amount of $185,000.00.

15 Approve the adoption of the Tax Levy Resolution for the Hall County School District for FY 2024.

16 Approve the award of IFB #056-43 General Contractor for Hire for the construction of a new gymnasium for Boys & Girls Club of Lanier to Pencor, LLC of Alpharetta, GA, in the amount of $2,474,740.00. This award is funded by the Community Development Block Grant (CDBG) with no financial obligation to Hall County.

17 Approve the renewal of the annual contract for RFQ/P #41-002 Demand Services for On-Call Concrete Contractors for various County departments to Chattachoochee Group, Inc. of Clermont, GA, Multiplex, LLC of Duluth GA, and Sol Construction, LLC of Atlanta, GA. The estimated annual cost is $102,410.00.

18 Approve the renewal of the FY 2024 Memorandum of Understanding with the University of Georgia (UGA) Extension for Cooperative Extension Services and Personnel; authorize the Chairman to execute all related documents, subject to the review and approval by the County Attorney.

19 Approve the Employment Agreement for the Assistant Director of Financial Services.

20 Approve the agreement renewal for On-Call Planning Services for Planning & Development to CPL Architects, Engineers, Landscape Architect & Surveyor, D.P.C., P.C. The estimated cost is $707,595.00.

21 Approve the award of RFQ/P #43-027 Gainesville-Hall Metropolitan Transportation Plan: 2025 Update/Bicycle and Pedestrian Plan Update for the Gainesville-Hall Metropolitan Planning Organization (GHMPO) to RS&H, Inc. of Atlanta, GA, in the amount of $398,500.00.

22 Approve the award of Task Order 2024-001 under RFP/Q #42-002 Demand Services for Resurfacing, Paving, and Full Depth Reclamation of various County roads for the FY 2024 resurfacing program to Allied Paving Contractors, Inc. of Pendergrass, GA, in the estimated amount of $13,079,799.25.

23 Approval and authorization for the Chairman to execute an Early Acquisition Request to the Georgia Department of Transportation (GDOT) regarding four (4) parcels on the Spout Springs Road Phase II Project; authorization for the Chairman to execute any and all additional documents necessary to effectuate the transaction, subject to review and approval by the County Attorney.

24 Approve the Release of a $297,169.00 Irrevocable Letter of Credit for Streets and Stormwater Management Facilities in Magnolia Station Phase II Subdivision. Commission District 3.

25 Approve the Acceptance of a $297,169.00 Guaranty Performance/Maintenance Agreement for Streets and Stormwater Management Facilities in Magnolia Station Phase II Subdivision. Commission District 3.

26 Approve the purchase of Replacement VxRail Hardware and Software for the Sheriff's Office to Ahead, Inc. of Chicago, IL, in the amount of $440,016.26.

Other Business - County Attorney

27 Approval and authorization for the Chairman to execute a resolution of the Board of Commissioners of Hall County calling for an election on the question whether or not to impose a Transportation Special Purpose Local Option Sales and Use Tax (TSPLOST), subject to Hall County voters' approval of a referendum on November 7, 2023, and authorization for the Chairman to take any and all additional action necessary to effectuate the Resolution, subject to review and approval by the County Attorney.

Other Business - Planning and Development

28 Public Hearing to adopt Hall County's updated short-term work program and capital improvement element.

29 Public Hearing for a new Malt Beverage Package license for Supermercado Hidalgo, located at 210 Atlanta Highway, Gainesville, GA 30501. Ownership is FN and MN Investment, LLC. License holder is Firoz Himani and the Registered Agent is Maria Diaz. Commission District 4.

30 Public Hearing to amend Title 17 of the Official Code of Ordinances of Hall County, Georgia, to comply with O.C.G.A. § 36-66-1 through 36-66-6, commonly known as the Zoning Procedures Law, as amended by the adoption of HB 1405; to repeal conflicting ordinances and resolutions; and for other purposes.

31 Public Hearing to change the name of a segment of road on the official Hall County road map from Deaton Creek Parkway to Deaton Way; being a ±0.096 mile section between Friendship Road and Thompsons Mill Road. Commission District 1.

Public Hearing to amend Hall County's Zoning Map as follows:

32 **3263 Tanners Mill Road | Use Subject to County Commission Approval |** on a 37.28± acre tract located on the east side of Tanners Mill Road approximately 756 feet from its intersection with Weaver Road | Zoned AR-IV; Tax 15025 000002 **| Proposed use: agri-entertainment venue |** Commission District 1 **| Paden M. Dunagan, applicant.**

33 **3263 Tanners Mill Road | Variance |** to allow for outside amplification of voice, music and/or instruments except during a wedding ceremony on a 37.28± acre tract located on the east side of Tanners Mill Road approximately 756 feet from its intersection with Weaver Road | Zoned AR-IV; Tax 15025 000002 **| Proposed use: agri-entertainment venue |** Commission District 1 **| Paden M. Dunagan, applicant.**

34 **5800 Lanier Islands Parkway | Rezone (Amend Conditions) |** from Planned Commercial Development (PCD) Conditional to Planned Commercial Development (PCD) to amend existing conditions on a 3.57± acre tract located on the south side of Lanier Islands Parkway at its intersection with Beards Road | Zoned PCD; Tax Parcel 07329 004012 **| Proposed use: vehicle sales and construction equipment rental & sales |** Commission District 2 **| Vacutek, LLC, applicant.**

35 **4033 Hidden Hollow Drive | Rezone |** from Planned Residential Development (PRD) to Agricultural-Residential-III (AR-III) on a 4.36± acre tract located on the west side of Hidden Hollow Drive approximately 718 feet from its intersection with Hidden Hollow Terrace | Zoned PRD; Tax Parcel 10098 000125 **| Proposed use: permitted uses in AR-III |** Commission District 2 **| Bourdua REI, LLC/Brian Bourdua, applicant.**

36 **4375 Peckerwood Road | Rezone |** from Residential-I-Low Density (R-I-L) to Agricultural Residential-III (AR-III) on a 5.21± acre tract located on the east side of Peckerwood Road approximately 1,720 feet from its intersection with Gillsville Highway | Zoned R-I-L; Tax Parcel 15003 000136 **| Proposed use: permitted uses in AR-III |** Commission District 3 **| Carlos & Tara Gregory, applicants.**

County Administrator

Commission Time

Adjourn

Hall County Government welcomes people with disabilities and their trained service animals. For questions about accessibility or to request reasonable accommodations please contact Maria Tuck, Compliance Specialist at 770-531-6712 48 hours prior to the event or as soon as possible.

AGENDA ITEM

Invocation

REPORT TO: **Work Session (07/10/23)**

REPORT TO: **Voting Meeting (07/13/23)**

ITEM NO: 692/2022

SUBJECT: Chairman Richard Higgins

Meetings:

Work Session Date: 07/10/23 **Voting Meeting Date:** 07/13/23

Executive Summary:

Presenter: n

Recommendation:
n/a

Purpose of Request:

History:

Facts and Issues:

Options:

Funding Requested	$ 0.00
Are funds within current budget?	No
Source of Funds	
Does the action involve a Resolution, Ordinance, Contract, Agreement, etc.?	No
Has it been reviewed by the County Attorney?	Yes
Is there a deadline for this item?	

Approvals:

Approve	Clerk
JR	JR

Attachments:

AGENDA ITEM

Pledge

REPORT TO: **Work Session (07/10/23)**

REPORT TO: **Voting Meeting (07/13/23)**

ITEM NO: 714/2022

SUBJECT: Commissioner Kathy Cooper

Meetings:

Work Session Date: 07/10/23 **Voting Meeting Date:** 07/13/23

Executive Summary:

Presenter: n

Recommendation:
n/a

Purpose of Request:

History:

Facts and Issues:

Options:

Funding Requested	$ 0.00
Are funds within current budget?	No
Source of Funds	
Does the action involve a Resolution, Ordinance, Contract, Agreement, etc.?	No
Has it been reviewed by the County Attorney?	Yes
Is there a deadline for this item?	

Approvals:

Approve	Clerk
JR	JR

Attachments:

AGENDA ITEM

Proclamation/s

REPORT TO: **Work Session (07/10/23)**

REPORT TO: **Voting Meeting (07/13/23)**

ITEM NO: 373/2023

SUBJECT: Approve the proclamation recognizing Damon Gowan's retirement after 25 years of service to Hall County, Georgia.

Meetings:

Work Session Date: 07/10/23 **Voting Meeting Date:** 07/13/23

Executive Summary:

Presenter:
Recommendation:
Approve.

Purpose of Request:
Approve the proclamation recognizing Damon Gowan's retirement after 25 years of service to Hall County, Georgia.

History:

Facts and Issues:

Options:

Funding Requested	$ 0.00
Are funds within current budget?	No
Source of Funds	
Does the action involve a Resolution, Ordinance, Contract, Agreement, etc.?	No
Has it been reviewed by the County Attorney?	Yes
Is there a deadline for this item?	2023-07-13

Approvals:

Approve	Public Information	Administration	Clerk
AO	SC	CR	JR

Attachments:

Hall County, Georgia

Board of Commissioners

WHEREAS, ***Damon Gowan began his public service career with Hall County on July 6, 1998; and***

WHEREAS, ***Damon has served the citizens of Hall County in many capacities: Firefighter I, EMT I, EMT II, and Fire Apparatus Operator; and***

WHEREAS, ***during his employment with Hall County, Damon received the Firefighter of Year Award in 2017; and***

WHEREAS, ***Lieutenant Tony Allen stated, "I've been fortunate to have Damon on my crew for the past three years. His humility, generosity, and kindness is a constant source of motivation and inspiration. Damon's dedication to the community service area is exemplary."; and***

WHEREAS, ***Damon retired on July 5, 2023 and plans to teach Healthcare Science at North Hall Middle School; and***

NOW THEREFORE, BE IT RESOLVED ***that the Hall County Board of Commissioners does hereby pay tribute to***

Damon Gowan

and recognizes him for his many accomplishments, contributions, and 25 years of dedicated service to Hall County and its citizens, and extends to him their most sincere wishes for continued success in his future endeavors.

Adopted this 13th day of July, 2023.

RICHARD HIGGINS CHAIRMAN	KATHY COOPER DISTRICT 1	BILLY POWELL DISTRICT 2
GREGG POOLE DISTRICT 3	JEFFREY STOWE DISTRICT 4	JENNIFER RIVERA COMMISSION CLERK

AGENDA ITEM

Proclamation/s

REPORT TO: **Work Session (07/10/23)**

REPORT TO: **Voting Meeting (07/13/23)**

ITEM NO: 351/2023

SUBJECT: Approve the Proclamation recognizing Dustin Cleveland's retirement after 20 years of service to Hall County, Georgia.

Meetings:

Work Session Date: 07/10/23 **Voting Meeting Date:** 07/13/23

Executive Summary:

Presenter: B

Recommendation:
Approval.

Purpose of Request:
Approve the Proclamation recognizing Dustin Cleveland's retirement after 20 years of service to Hall County, Georgia.

History:

Facts and Issues:

Options:

Funding Requested	$ 0.00
Are funds within current budget?	No
Source of Funds	
Does the action involve a Resolution, Ordinance, Contract, Agreement, etc.?	No
Has it been reviewed by the County Attorney?	Yes
Is there a deadline for this item?	

Approvals:

Approve	Public Information	Administration	Clerk
AO	SC	JR	JR

Attachments:

Hall County, Georgia

Board of Commissioners

WHEREAS, ***Dustin Lee Cleveland began his public service career with Hall County on June 18, 2003; and***

WHEREAS, ***Dustin has served the citizens of Hall County in many capacities such as: Jailer, Corporal, Deputy, Sergeant and Lieutenant; and***

WHEREAS, ***during his employment with Hall County, Dustin served the Court Services Division dutifully for a decade, and later dedicated his career to the Sheriff's Office along with his K-9s Journey and Bella and assisted in many training sessions of Explosive Ordinance and Narcotics K-9s; and***

WHEREAS, ***Captain Kelly Edwards stated, "Dustin, thank you for your service to the Court Services Division, the Sheriff's Office, and to the Hall County Community. Your experience as a K-9 Handler was an asset to the Court Services Division, as well as the Sheriff's Office. You will be missed as an employee, but you, as a person will be missed even more. I hope your new adventure brings you everything you hope for."; and***

WHEREAS, ***Dustin retired on June 30, 2023 and will continue to do what he loves as an Explosive Ordinance K-9 Handler with another agency and***

NOW THEREFORE, BE IT RESOLVED ***that the Hall County Board of Commissioners does hereby pay tribute to***

Dustin Lee Cleveland

and recognizes him for his many accomplishments, contributions, and 20 years of dedicated service to Hall County and its citizens, and extends to him their most sincere wishes for continued success in his future endeavors.

Adopted this 13th day of July, 2023.

RICHARD HIGGINS CHAIRMAN	KATHY COOPER DISTRICT 1	BILLY POWELL DISTRICT 2
GREGG POOLE DISTRICT 3	JEFFREY STOWE DISTRICT 4	JENNIFER RIVERA COMMISSION CLERK

AGENDA ITEM

Consent Agenda

REPORT TO: **Work Session (07/10/23)**

REPORT TO: **Voting Meeting (07/13/23)**

ITEM NO: 399/2023

SUBJECT: Approve the July 10, 2023 Work Session minutes.

Meetings:

Work Session Date: 07/10/23 **Voting Meeting Date:** 07/13/23

Executive Summary:

Presenter: CA

Recommendation:
Approve.

Purpose of Request:
Approve the July 10, 2023 Work Session Minutes.

History:

Facts and Issues:

Options:

Funding Requested	$ 0.00
Are funds within current budget?	No
Source of Funds	
Does the action involve a Resolution, Ordinance, Contract, Agreement, etc.?	No
Has it been reviewed by the County Attorney?	Yes
Is there a deadline for this item?	2023-07-13

Approvals:

Approve	Attorney	Administration	Clerk
AO	WLI	JR	JR

Attachments:

7-10-2023 Work Session Minutes

HALL COUNTY BOARD OF COMMISSIONERS
WORK SESSION MINUTES

Hall County Government Center 2nd Floor
2875 Browns Bridge Road
Gainesville, GA 30504
Streamed Live on Hall County Government's Website - www.hallcounty.org
Monday, July 10, 2023 - 03:00 PM

Call to Order

Chairman Higgins at 3:00 p.m.

Present:

Chairman Richard Higgins, Vice-Chairman Billy Powell, and Commissioners Kathy Cooper, Gregg Poole, and Jeff Stowe

Also present were County Administrator Zach Propes, Assistant County Administrator Katie Crumley, Commission Clerk Jennifer Rivera, and County Attorney William Linkous III

Vice-Chairman Billy Powell was present by phone.

Community Services and Parks

Brent Holloway, Director of Community Services and Parks, addressed the Board.

1 Approve the award of IFB #021-44 Furnish and Install New Playground Equipment at Cool Springs Park for Parks & Leisure to Bliss Products and Services, Inc. of Lithia Springs, GA, in the amount of $199,872.31.

Consent

County Attorney

Mr. Linkous addressed the Board.

2 Approve the amendment to the November 17, 2022 Meeting Minutes regarding item 17 (Application of Atlas Development Services, Inc.) to correct a scrivener's error.

Consent

3 Approval and authorization for the Chairman to execute a resolution consenting to the de-annexation of 4042 Brock Drive, Oakwood, GA, pursuant to O.C.G.A. § 36-36-22, and authorize the Chairman to execute the resolution and any and all documents necessary to consent to the de-annexation, subject to the review and approval by the County Attorney.

Consent

4 Approve the Stipulation and Settlement Agreement in the worker's compensation case of Sheriff's Office employee Ernestine Smith, and authorize the Chairman to execute any and all documents necessary to effectuate the settlement, subject to the review and approval by the County Attorney.

Consent

5 Approval and authorization for the Chairman to execute an Intergovernmental Agreement with the Town of Braselton, City of Buford, Town of Clermont, City of Flowery Branch, City of Gainesville, City of Gillsville, City of Lula, City of Oakwood, and City of Rest Haven regarding a Transportation Special Purpose Local Option Sales and Use Tax (TSPLOST) and authorization for the Chairman to take any additional action necessary to effectuate the Agreement, subject to review and approval by the County Attorney.

Consent

6 Approval and authorization for the Chairman to execute a resolution of the Board of Commissioners of Hall County calling for an election on the question whether or not to impose a Transportation Special Purpose Local Option Sales and Use Tax (TSPLOST), subject to Hall County voters' approval of a referendum on November 7, 2023, and authorization for the Chairman to take any and all additional action necessary to effectuate the Resolution, subject to review and approval by the County Attorney.

Financial Services

Wes Geddings, Director of Financial Services, addressed the Board.

7 Approve the FY 2024 Gainesville-Hall County Economic Development Council Service Contract between Hall County and the Greater Hall Chamber of Commerce in the amount of $185,000.00.

Consent

8 Approve the adoption of the Tax Levy Resolution for the Hall County School District for FY 2024.

Consent

9 Approve the award of IFB #056-43 General Contractor for Hire for the construction of a new gymnasium for Boys & Girls Club of Lanier to Pencor, LLC of Alpharetta, GA, in the amount of $2,474,740.00. This award is funded by the Community Development Block Grant (CDBG) with no financial obligation to Hall County.

Consent

10 Approve the renewal of the annual contract for RFQ/P #41-002 Demand Services for On-Call Concrete Contractors for various County departments to Chattachoochee Group, Inc. of Clermont, GA, Multiplex, LLC of Duluth GA, and Sol Construction, LLC of Atlanta, GA. The estimated annual cost is $102,410.00.

Consent

Human Resources

Dr. LisaRae Jones, Director of Human Resources, addressed the Board.

11 Approve the renewal of the FY 2024 Memorandum of Understanding with the University of Georgia (UGA) Extension for Cooperative Extension Services and Personnel; authorize the Chairman to execute all related documents, subject to the review and approval by the County Attorney.

Consent

12 Approve the Employment Agreement for the Assistant Director of Financial Services.

Consent

Planning and Development

Randi Doveton, Director of Planning and Development, addressed the Board.

13 Approve the agreement renewal for On-Call Planning Services for Planning & Development to CPL Architects, Engineers, Landscape Architect & Surveyor, D.P.C., P.C. The estimated cost is $707,595.00.

Consent

14 Public Hearing to adopt Hall County's updated short-term work program and capital improvement element.

15 Public Hearing for a new Malt Beverage Package license for Supermercado Hidalgo, located at 210 Atlanta Highway, Gainesville, GA 30501. Ownership is FN and MN Investment, LLC. License holder is Firoz Himani and the Registered Agent is Maria Diaz. Commission District 4.

16 Public Hearing to amend Title 17 of the Official Code of Ordinances of Hall County, Georgia, to comply with O.C.G.A. § 36-66-1 through 36-66-6, commonly known as the Zoning Procedures Law, as amended by the adoption of HB 1405; to repeal conflicting ordinances and resolutions; and for other purposes.

17 Public Hearing to change the name of a segment of road on the official Hall County road map from Deaton Creek Parkway to Deaton Way; being a ±0.096 mile section between Friendship Road and Thompsons Mill Road. Commission District 1.

18 **3263 Tanners Mill Road | Use Subject to County Commission Approval |** on a 37.28± acre tract located on the east side of Tanners Mill Road approximately 756 feet from its intersection with Weaver Road | Zoned AR-IV; Tax 15025 000002 **| Proposed use: agri-entertainment venue |** Commission District 1 **| Paden M. Dunagan, applicant.**

19 **3263 Tanners Mill Road | Variance |** to allow for outside amplification of voice, music and/or instruments except during a wedding ceremony on a 37.28± acre tract located on the east side of Tanners Mill Road approximately 756 feet from its intersection with Weaver Road | Zoned AR-IV; Tax 15025 000002 **| Proposed use: agri-entertainment venue |** Commission District 1 **| Paden M. Dunagan, applicant.**

20 **5800 Lanier Islands Parkway | Rezone (Amend Conditions) |** from Planned Commercial Development (PCD) Conditional to Planned Commercial Development (PCD) to amend existing conditions on a 3.57± acre tract located on the south side of Lanier Islands Parkway at its intersection with Beards Road | Zoned PCD; Tax Parcel 07329 004012 **| Proposed use: vehicle sales and construction equipment rental & sales |** Commission District 2 **| Vacutek, LLC, applicant.**

21 **4033 Hidden Hollow Drive | Rezone |** from Planned Residential Development (PRD) to Agricultural-Residential-III (AR-III) on a 4.36± acre tract located on the west side of Hidden Hollow Drive approximately 718 feet from its intersection with Hidden Hollow Terrace | Zoned PRD; Tax Parcel 10098 000125 **| Proposed use: permitted uses in AR-III |** Commission District 2 **| Bourdua REI, LLC/Brian Bourdua, applicant.**

22 **4375 Peckerwood Road | Rezone |** from Residential-I-Low Density (R-I-L) to Agricultural Residential-III (AR-III) on a 5.21± acre tract located on the east side of Peckerwood Road approximately 1,720 feet from its intersection with Gillsville Highway | Zoned R-I-L; Tax Parcel 15003 000136 **| Proposed use: permitted uses in AR-III |** Commission District 3 **| Carlos & Tara Gregory, applicants.**

Public Works and Utilities

Srikanth Yamala, Director of Community Development and Infrastructure, addressed the Board.

23 Approve the award of RFQ/P #43-027 Gainesville-Hall Metropolitan Transportation Plan: 2025 Update/Bicycle and Pedestrian Plan Update for the Gainesville-Hall Metropolitan Planning Organization (GHMPO) to RS&H, Inc. of Atlanta, GA, in the amount of $398,500.00.

Consent

Bill Nash, Director of Public Works and Utilities, addressed the Board.

24 Approve the award of Task Order 2024-001 under RFP/Q #42-002 Demand Services for Resurfacing, Paving, and Full Depth Reclamation of various County roads for the FY 2024 resurfacing program to Allied Paving Contractors, Inc. of Pendergrass, GA, in the estimated amount of $13,079,799.25.

Consent

25 Approval and authorization for the Chairman to execute an Early Acquisition Request to the Georgia Department of Transportation (GDOT) regarding four (4) parcels on the Spout Springs Road Phase II Project; authorization for the Chairman to execute any and all additional documents necessary to effectuate the transaction, subject to review and approval by the County Attorney.

Consent

26 Approve the Release of a $297,169.00 Irrevocable Letter of Credit for Streets and Stormwater Management Facilities in Magnolia Station Phase II Subdivision. Commission District 3.

Consent

27 Approve the Acceptance of a $297,169.00 Guaranty Performance/Maintenance Agreement for Streets and Stormwater Management Facilities in Magnolia Station Phase II Subdivision. Commission District 3.

Consent

Sheriff's Office

Major Sean McCusker, Sheriff's Office, addressed the Board.

28 Approve the purchase of Replacement VxRail Hardware and Software for the Sheriff's Office to Ahead, Inc. of Chicago, IL, in the amount of $440,016.26.

Consent

County Administrator

Mr. Propes addressed the Board and presented a video story highlighting the adoption of Ace, a dog recently adopted from the Animal Shelter. Mr. Propes acknowledged Trey Garcia, Director of Animal Services and Brent Holloway, Director of Community Services and Parks for their hardwork and dedication. Mr. Propes thanked The Gainesville Times for their recent story on the Animal Shelter.

Public Comments

The following people addressed the Board:

- *Robert Farrell, 2723 Northlake Road, Gainesville*

Commission Time

The Commissioners did not have any items to report.

Adjourn

Chairman Higgins adjourned the meeting at 3:32 p.m.

AGENDA ITEM

Consent Agenda

REPORT TO: **Work Session (07/10/23)**

REPORT TO: **Voting Meeting (07/13/23)**

ITEM NO: 400/2023

SUBJECT: Approve the June 21, 2023 Voting Meeting minutes.

Meetings:

Work Session Date: 07/10/23 **Voting Meeting Date:** 07/13/23

Executive Summary:

Presenter: CA

Recommendation:
Approve.

Purpose of Request:
Approve the June 21, 2023 Voting Meeting Minutes.

History:

Facts and Issues:

Options:

Funding Requested	$ 0.00
Are funds within current budget?	No
Source of Funds	
Does the action involve a Resolution, Ordinance, Contract, Agreement, etc.?	No
Has it been reviewed by the County Attorney?	Yes
Is there a deadline for this item?	2023-07-13

Approvals:

Approve	Attorney	Administration	Clerk
AO	WLI	JR	JR

Attachments:

6-21-2023 Voting Meeting Minutes

HALL COUNTY BOARD OF COMMISSIONERS
MEETING MINUTES

Hall County Government Center 2nd Floor
2875 Browns Bridge Road
Gainesville, GA 30504
Streamed Live on Hall County Government's Website - www.hallcounty.org
Wednesday, June 21, 2023 - 06:00 PM

Call to Order

Chairman Higgins at 6:00 p.m.

Present:

Chairman Richard Higgins, Vice-Chairman Billy Powell, and Commissioners Kathy Cooper, Gregg Poole, and Jeff Stowe

Also present were County Administrator Zach Propes, Assistant County Administrators Katie Crumley and Casey Ramsey, Commission Clerk Jennifer Rivera, County Attorney William Linkous III, and Assistant County Attorney Justin Lawhon

Approve Agenda

Commissioner Stowe/Commissioner Powell — approve — unanimous

Invocation

1 Chairman Richard Higgins

Pledge

2 Commissioner Jeff Stowe

Public Comments

There were no comments from the public.

Consent Agenda

Commissioner Powell/Commissioner Poole — approve — Vote: 4 to 0

Commissioner Cooper —aye

Commissioner Powell — aye

Chairman Higgins — aye

Commissioner Poole — aye

Commissioner Stowe — recused

Motion passed.

3 Approve the June 19, 2023 Work Session minutes.

4 Approve the June 8, 2023 Voting Meeting minutes.

5 Approve the June 8, 2023 Executive Session minutes.

6 Approve the June 8, 2023 Meeting minutes.

7 Appointment to the Library Board to serve an unexpired term from July 1, 2023 to June 30, 2026. Commission District 2.

8 Approve the renewal of the annual contract for IFB #038-42 HVAC Repair Services for Building Maintenance to Ace Comfort Mechanical of Gainesville, GA. The estimated annual cost is $170,000.00.

9 Approve the renewal of the annual agreement for an inmate work detail consisting of one (1) full-time correctional officer and four (4) inmates with the Georgia Department of Transportation (GDOT) of Atlanta, GA, in the amount of $79,468.11.

10 Approve the renewal of the annual agreement for an inmate work detail consisting of one (1) full-time correctional officer and eight (8) to ten (10) inmates with the Georgia Department of Transportation (GDOT) of Atlanta, GA, in the amount of $61,157.10.

11 Approve the extension of the Employment Agreement for Special Assistant County Attorney.

12 Approve the resolution regarding a land exchange with the City of Gainesville, pursuant to O.C.G.A. Section 36-9-3 (a)(3)(A), of two tracts of real property each totaling 0.278 acres in order to obtain land necessary for the Hall County Sheriff's Office Training Center facility on Allen Creek Road, and to authorize the Chairman to sign all documents, agreements, and deeds necessary to effectuate the land exchange, subject to review and approval of the County Attorney.

13 Approval and authorization for the Chairman to execute a master lease agreement between the Georgia Properties Commission and Hall County to lease rooms 105-114 of 1195 Jesse Jewell Parkway, Gainesville, GA for use as the Conflict Defenders' Office, and authorization for the Chairman to execute any and all additional documents necessary to effectuate the lease, subject to review and approval by the County Attorney.

14 Approval and authorization for the Chairman to execute an Amendment to the Intergovernmental Agreement with the Chicopee Woods Area Park Commission dated September 11, 1989, so as to place responsibility for procurement of insurance coverage with the Chicopee Woods Area Park Commission, and authorization for the Chairman to execute any and all additional documents necessary to effectuate the Amendment, subject to review and approval by the County Attorney.

15 Approve the ratification of the amended application and award of the 2023 Judicial Council American Rescue Plan Act Grant funding for the Northeastern Judicial Circuit to address case backlogs in the amount of $512,000.00 and appoint the Grants Manager as the Program Designee and authorize the Chairman to execute all related application and award documents. No match is required.

16 Approve the single source purchase of an Audio/Video Streaming System for Court Administration to S&L Integrated Systems, LLC of Thomasville, GA, in the amount of $565,656.19.

17 Approve the award of IFB #012-44 Vehicle Fuels Delivery Annual Contract for various County departments to Mansfield Oil Company of Gainesville, Inc. of Gainesville, GA. The estimated annual cost is $200,000.00.

18 Approve the FY 2024 annual contract renewal for property and casualty insurance brokers (Gallagher Bassett Services, Inc. and Arthur J. Gallagher Company), insurance program coverages, fees, and third party administrator (TPA) services in the amount of $1,557,905.00; and authorize the Chairman to execute all related documents.

19 Approve the ratification of the application, award, a twelve (12) month Memorandum of Understanding with Evidence Based Associates, LLC and any further supplemental funding of the FY 2024 Juvenile Justice Incentive Grant for the Hall County Juvenile Court for $697,945.00, and appoint the Grants Manager as the Program Designee and authorize the Chairman to execute all related application and award documents. No match is required.

20 Approve Change Order #1 under RFQ/P #41-001 Demand Services for Civil Engineering Services for Planning & Development to CPL Architects, Engineers, Landscape Architect & Surveyor, D.P.C. (P.C.) of Suwanee, GA. The estimated cost is $217,000.00.

21 Approve the award of IFB #004-44 Guardrail Installation and Maintenance Services for Public Works & Utilities to Bagwell Fence Company, Inc. of Spartanburg, SC. The estimated annual cost is $110,750.00.

22 Approve the renewal of the annual contract for RFP #42-002 Demand Services for Resurfacing, Paving & Full Depth Reclamation for Public Works & Utilities to Allied Paving Contractors, Inc. of Pendergrass, GA and Pittman Construction Company of Conyers, GA. The estimated annual cost is $13,953,289.00.

23 Approve the award of RFQ #44-004 Demand Services for On-Call Public Works Contractors for Public Works & Utilities to Allied Paving Contractors, Inc. of Pendergrass, GA, Strickland & Sons Pipeline, Inc. of Gainesville, GA, Multiplex, LLC of Duluth, GA, and Simpson Trucking & Grading, Inc. of Gainesville, GA. The estimated annual cost is $2,400,000.00.

24 Approve the award of RFQ/P #44-007 Inmate Food Service Annual Contract for the Hall County Jail to Trinity Services Group, Inc. of Oldsmar, FL. The estimated annual cost is $950,000.00.

25 Approve the annual contract with the State of Georgia Department of Human Services for Treatment Services to provide drug screening services and appoint the Treatment Services Director as the Program Designee and authorize the Chairman to execute all related award documents.

Other Business - Court Administration

Jason Stephenson, Court Administrator, addressed the Board.

26 Approve the award of RFQ/P #43-022 Owner's Representative for Judicial Complex Space Study and Consultant Services for Court Administration to CGL Companies of Atlanta, GA, in the amount of $414,696.00.

Commissioner Stowe/Commissioner Powell — approve the award to Comprehensive Program Services, Inc. (CPS) of Atlanta, GA in the amount of $196,100.00 — unanimous

Other Business - Financial Services

Wes Geddings, Director of Financial Services, addressed the Board.

27 Approve the Fiscal Year 2024 Budget Resolutions: (1) Fiscal Year 2024 Budget Resolution and (2) Victim Witness Program.

Mr. Geddings discussed the following information regarding the proposed Budget:

- *Operating and Captial Funds:*
  - *Operating Funds - $313,289,591*
  - *Capital Funds - $97,626,296*
  - *Total Countywide Budget - $410,915,887*
- *FY 2023 Proposed Millage Rates:*
  - *General Fund - 3.440 mills*
  - *Fire Services Unincorporated - 2.650 mills*
  - *Fire Services Incorporated - 4.080 mills*
  - *Emergency Services - 0.571 mills*
  - *Development Services - 1.005 mills*
  - *Parks & Leisure Services - 0.364 mills*
  - *Total Unincorporated Millage Rate - 8.030 mills, which includes a full rollback*

Commissioner Powell/Commissioner Poole — approve — unanimous

28 Approve the Tax Levy Resolution setting the millage rates for 2023.

Commissioner Powell/Commissioner Stowe — approve — unanimous

29 Approve the Fiscal Year 2023 Budget Adjustment Resolution.

Commissioner Powell/Commissioner Stowe — approve — unanimous

Public Hearing to amend Hall County's Zoning Map as follows:

Randi Doveton, Director of Planning and Development, addressed the Board.

30 **3724 Roy Parks Road | Use Subject to County Commission Approval |** on an 87.38± acre tract located on the north side of Roy Parks Road approximately 829 feet from its intersection with Talmo Road | Zoned AR-IV; Tax Parcel 15024 000019 **| Proposed use: equestrian center |** Commission District 3 **| Patricia M. Egan, applicant.**

Mr. Lawhon introduced the item. Ms. Doveton discussed the item. Mr. Lawhon conducted the Public Hearing.

The following people addressed the Board:

Favor:

- *Patricia Egan, 3724 Roy Parks Road, Talmo*

Commissioner Poole/Commissioner Powell — approve with the five (5) conditions listed below — unanimous

Conditions:

1. *The equestrian center shall operate as described in the narrative and depicted on the site plan.*
2. *A Hall County business license shall be obtained.*
3. *A variance is granted for barn 2 for the setback requirement for structures used for the keeping of horses, per Section 17.240.060 from 200 feet to 140 feet from the property line.*
4. *Per Section 2.60.060. — effective period of approved applications, all applications approved by the board, whether a request for variance from the terms of Title 17, a request for conditional use, a request for the enlargement, change or continuance of a nonconforming use or a request to appeal a decision by an administrative official in the enforcement of Title 17, shall be effective for a period of six months. If no action is taken by the applicant to implement the purpose of the application by obtaining the proper permit and/or license and proceeding with the building, occupancy or establishment of business within six months from the date of approval by the board, said approval shall become null and void.*
5. *The existing sign shall be allowed to remain as constructed.*

31 **5182 Odum Smallwood Road | Use Subject to County Commission Approval |** on a 27.40± acre tract located on the east side of Odum Smallwood Road approximately 480 feet from its intersection with Jess Helton Road | Zoned AR-IV; Tax Parcel 12004 000019 **| Proposed use: telecommunications facility |** Commission District 3 **| Verizon Wireless, applicant.**

Mr. Lawhon introduced the item. Ms. Doveton discussed the item. Mr. Lawhon conducted the Public Hearing.

The following people addressed the Board:

Opposition:

- *Juladie Ibanez, 5545 Odum Smallwood Road, Gainesville*

Commissioner Poole/Commissioner Stowe — approve tabling item 31 until the July 27, 2023 Voting Meeting — unanimous

32 **6084 Highway 52 | Use Subject to County Commission Approval |** on a 53.96± acre tract located on the south side of Highway 52 approximately 456 feet from its intersection with Hooper Road | Zoned AR-IV; Tax Parcel 15004 000034 **| Proposed use: telecommunications facility |** Commission District 3 **| Mattaniah S. Jahn P.A. obo VB BTS II, LLC, applicant.**

Mr. Lawhon introduced the item. Ms. Doveton discussed the item.

Commissioner Poole/Commissioner Powell — approve tabling item 32 until the July 27, 2023 Voting Meeting — unanimous

33 **6034 Lanier Islands Parkway | Rezone |** from Agricultural-Residential-III (AR-III) to Light Industrial (I-I) on a 7.67± acre tract located on the west side of Lanier Islands Parkway approximately 592 feet from its intersection with North Waterworks Road | Zoned AR-III; Tax Parcel 07330 001005 **| Proposed use: enclosed boat & RV storage |** Commission District 2 **| Over Under Storage, LLC, applicant.**

Mr. Lawhon introduced the item. Ms. Doveton discussed the item. Mr. Lawhon conducted the Public Hearing.

The following people addressed the Board:

Favor:

- *Tom Daniel (appeared remotely), 401 West Park Court, Peachtree City*

Commissioner Powell/Commissioner Poole — approve with the nine (9) conditions listed below — unanimous

Conditions:

1. *The request to rezone the property to Light Industrial (I-I,17.160) is denied and shall be rezoned to Planned Industrial Development (PID, 17.180.090) instead.*
2. *The development shall generally occur as depicted on the site plans dated March, 27, 2023 and described in the project narrative, modified for compliance with zoning conditions and Hall County regulations. No variances are granted as part of this request.*
3. *The non-residential development shall be subject to the standards of the Gateway Corridors Overlay District (GCOD,17.420). No variances are granted from these standards.*
4. *Any outdoor lighting on the premises shall be full cut-off downlight.*
5. *All parking and storage areas shall be paved with either asphalt or concrete.*
6. *Plans for any further improvements or development of the property shall be submitted for review and appropriate permits obtained.*
7. *All conditions of zoning shall be made part of any plats created for the property.*
8. *The development shall have a minimum 6 foot high decorative steel fencing with stone or brick columns spaced no less than every 50 feet along all right-of-ways. All other fencing shall be a 6 foot high black vinyl link fence and shall be installed along all other property lines.*
9. *Hours of operation shall be from 5 am to 10 pm.*

34 **6515 New Bethany Road | Rezone |** from Highway-Business (H-B) to Light-Industrial (I-I) on a 1.86± acre tract located on the east side of New Bethany at its intersection with Old Lanier Islands Drive | Zoned H-B; Tax Parcel 07330 001006B **| Proposed use: Light Industrial |** Commission District 2 **| Genuine Mapping & Design, LLC, applicant.**

Mr. Lawhon introduced the item. Ms. Doveton discussed the item. Mr. Lawhon conducted the Public Hearing.

The following people addressed the Board:

Favor:

- *Carla Baker, 5241 Hampton Mill Drive, Flowery Branch*

Commissioner Powell/Commissioner Stowe — approve with the ten (10) conditions listed below — unanimous

Conditions:

1. *The request to rezone the property to Light Industrial (I-I,17.160) is denied and shall be rezoned to Planned Industrial Development (PID, 17.180.090) instead.*
2. *The development shall generally occur as depicted on the site plans dated May 11, 2023 and described in the project narrative, modified for compliance with zoning conditions and Hall County regulations. No variances are granted as part of this request.*
3. *The non-residential development shall be subject to the standards of the Gateway Corridors Overlay District (GCOD,17.420). No variances are granted from these standards.*
4. *Any outdoor lighting on the premises shall be full cut-off downlight.*
5. *All parking and storage areas shall be paved with either asphalt or concrete.*
6. *Plans for any further improvements or development of the property shall be submitted for review and appropriate permits obtained.*
7. *All conditions of zoning shall be made part of any plats created for the property.*
8. *The development shall have a minimum 6 foot high decorative steel fencing with stone or brick columns spaced no less than every 50 feet along all right-of-ways of New Bethany Road and Old Lanier Island Drive. All other fencing shall be a minimum 6 foot high black vinyl link fence and shall be installed along all other property lines.*
9. *Hours of operation shall be from 5 am to 10 pm for boat storage and repair.*
10. *The applicant shall install a 4 to 5 foot high landscaped berm along Old Lanier Islands Drive with decorative fencing.*

35 **3675 & 3745 Friendship Road | Rezone |** from Agricultural-Residential-III (AR-III) & Highway-Business (H-B) to Light Industrial (I-I) on a 2.11± acre tract located on the east side of Friendship Road approximately 628 feet from its intersection with Swansey Road | Zoned H-B & AR-III; Tax Parcel 15048 000025D & 000025B **| Proposed use: landscape supply business |** Commission District 1 **| Yelitza Ossa-OSAS Concrete, applicant.**

Mr. Lawhon introduced items 35 and 36, which were heard together. Ms. Doveton discussed the items. Mr. Lawhon conducted the Public Hearing.

The following people addressed the Board regarding both items 35 and 36:

Favor:

- *Hilda Abbott*
- *Bobb McCann, 1550 North Brown Road, Lawrenceville*

Opposition:

- *Stanley Harrison, 7475 Williams Road, Flowery Branch*
- *Phillip Harrison, 6061 Devonshire Drive, Flowery Branch*

Commissioner Cooper/Commissioner Stowe — deny — Vote 4 to 0

Commissioner Cooper —aye

Commissioner Powell — aye

Chairman Higgins — aye

Commissioner Poole — abstained

Commissioner Stowe — aye

Motion passed.

36 **3675 & 3745 Friendship Road | Use Subject to County Commission Approval |** on a 2.11± acre tract located on the east side of Friendship Road approximately 628 feet from its intersection with Swansey Road | Zoned H-B & AR-III; Tax Parcel 15048 000025D & 000025B **| Proposed use: outdoor storage within Gateway Corridors Overlay District |** Commission District 1 **| Yelitza Ossa-OSAS Concrete, applicant.**

Items 35 and 36 were heard together. See item 35 for public hearing details.

Commissioner Cooper/Commissioner Stowe — deny — Vote 4 to 0

Commissioner Cooper —aye

Commissioner Powell — aye

Chairman Higgins — aye

Commissioner Poole — abstained

Commissioner Stowe — aye

Motion passed.

County Administrator

Mr. Propes addressed the Board. He stated the following:

- *Hall County Offices will be closed on Tuesday, July 4, 2023 in observance of the Independence Day holiday.*
- *Thanked the Board of Commissioners for their leadership in our budget process. Thanked the Financial Services Department and Budget Committee for their work on the budget.*

Commission Time

Commissioner Billy Powell, District 2, thanked Hall County staff and Administration for their work on the budget.

Commissioner Gregg Poole, District 3, thanked Hall County staff for their work.

Chairman Richard Higgins stated the Commission works together and is only good as the information they are given. Appreciates the Hall County staff and for the information they provide.

Adjourn

Commissioner Stowe/Commissioner Poole — adjourn at 6:49 p.m. — unanimous

AGENDA ITEM

Consent Agenda

REPORT TO: **Work Session (07/10/23)**

REPORT TO: **Voting Meeting (07/13/23)**

ITEM NO: 402/2023

SUBJECT: Approve the June 21, 2023 Executive Session minutes.

Meetings:

Work Session Date: 07/10/23 **Voting Meeting Date:** 07/13/23

Executive Summary:

Presenter: CA

Recommendation:
Approve.

Purpose of Request:
Approve the June 21, 2023 Executive Session Minutes.

History:

Facts and Issues:

Options:

Funding Requested	$ 0.00
Are funds within current budget?	No
Source of Funds	
Does the action involve a Resolution, Ordinance, Contract, Agreement, etc.?	No
Has it been reviewed by the County Attorney?	Yes
Is there a deadline for this item?	2023-07-13

Approvals:

Approve	Attorney	Administration	Clerk
AO	WLI	JR	JR

Attachments:

AGENDA ITEM

Consent Agenda

REPORT TO: **Work Session (07/10/23)**

REPORT TO: **Voting Meeting (07/13/23)**

ITEM NO: 401/2023

SUBJECT: Approve the June 21, 2023 Meeting minutes.

Meetings:

Work Session Date: 07/10/23 **Voting Meeting Date:** 07/13/23

Executive Summary:

Presenter: CA

Recommendation:
Approve.

Purpose of Request:
Approve the June 21, 2023 Meeting Minutes.

History:

Facts and Issues:

Options:

Funding Requested	$ 0.00
Are funds within current budget?	No
Source of Funds	
Does the action involve a Resolution, Ordinance, Contract, Agreement, etc.?	No
Has it been reviewed by the County Attorney?	Yes
Is there a deadline for this item?	2023-07-13

Approvals:

Approve	Attorney	Administration	Clerk
AO	WLI	JR	JR

Attachments:

6-21-2023 Meeting Minutes

HALL COUNTY BOARD OF COMMISSIONERS
MEETING MINUTES

Hall County Government Center 2nd Floor
2875 Browns Bridge Road
Gainesville, GA 30504
Streamed Live on Hall County Government's Website - www.hallcounty.org
Wednesday, June 21, 2023 - 05:15 PM

Call to Order

Chairman Higgins at 5:16 p.m.

Present:

Chairman Richard Higgins, Vice-Chairman Billy Powell and Commissioners Jeff Stowe, Kathy Cooper, and Gregg Poole

Also present were County Administrator Zach Propes, Assistant County Administrators Katie Crumley and Casey Ramsey, Commission Clerk Jennifer Rivera, Deputy Commission Clerk Abril Olivas, and County Attorney William Linkous III

Commissioner Powell/Commissioner Stowe — to go into Executive Session at 5:16 p.m. — unanimous

Executive Session

1 Discussion regarding land acquisition, land disposition, personnel matters, potential litigation and/or litigation. Executive Session is not open to the public. Executive Session is a lawfully closed meeting [§ 50-14-1 (a)(2)].

Commissioner Powell/Commissioner Poole — to adjourn the Executive Session at 5:49 p.m. — unanimous

Adjourn

Commissioner Powell/Commissioner Poole — adjourn the Meeting at 5:49 p.m. — unanimous

HALL COUNTY
GEORGIA We have it all in Hall

AGENDA ITEM

Consent Agenda

REPORT TO: **Work Session (07/10/23)**

REPORT TO: **Voting Meeting (07/13/23)**

ITEM NO: 391/2023

SUBJECT: Approve the award of IFB #021-44 Furnish and Install New Playground Equipment at Cool Springs Park for Parks & Leisure to Bliss Products and Services, Inc. of Lithia Springs, GA, in the amount of $199,872.31.

Meetings:

Work Session Date: 07/10/23 **Voting Meeting Date:** 07/13/23

Executive Summary:

Presenter: BH

Recommendation:
Approve the award of IFB #021-44 Furnish and Install New Playground Equipment at Cool Springs Park for Parks & Leisure to Bliss Products and Services, Inc. of Lithia Springs, GA, in the amount of $199,872.31.

Purpose of Request:
Approve the award of IFB #021-44 Furnish and Install New Playground Equipment at Cool Springs Park for Parks & Leisure to Bliss Products and Services, Inc. of Lithia Springs, GA, in the amount of $199,872.31.

History:
Previous playground equipment at Cool Springs Park has been removed due to poor condition and resulting safety concerns. Recommendation made after competitively bid IFB #021-44 Furnish and Install New Playground Equipment at Cool Springs Park

Facts and Issues:
This proposal includes the installation of playground equipment at a new, more convenient location at the park, with greater access to parking and ballfields.

Options:

Funding Requested	$ 199,872.31
Are funds within current budget?	Yes
Source of Funds	SPLOST VIII
Does the action involve a Resolution, Ordinance, Contract, Agreement, etc.?	Yes
Has it been reviewed by the County Attorney?	Yes
Is there a deadline for this item?	2023-07-13

Approvals:

Buyer	Submit	Approve	Purchasing
EW	BH	BH	EW
Budget	**Finance**	**Attorney**	**Administration**
EW	WG	WLI	CR
Clerk			
JR			

Attachments:
Financial Supplement
Contract
Bid Tab Summary
Playground Designs

HALL COUNTY BOARD OF COMMISSIONERS
FINANCIAL SUPPLEMENT REPORT

AGENDA ITEM 391/2023

Funds Requested: $ 199,872.31

Request Budgeted: Yes

Proposed Source of Funding:

SPLOST VIII

Budget Transfer Requested:

No

Funding Source Items:

Fiscal Year	Fund	Division	Account	Amount
2024	324-SPLOST VIII	6210-PARKS AND LEISURE SERVICES	541400-INFRASTRUCTURE	$199,872.31

Budget Transfer Items:

Additional Information/Comments:

Contact for Questions: BH

Phone: 678-997-5823

Hall County Government
FINANCIAL SERVICES

CONTRACT EXECUTION SIGNATURE REQUEST

HALL COUNTY
GEORGIA

POST OFFICE DRAWER 1435
GAINESVILLE, GA 30503

t: 770.535.8270 | f: 770.531.6711

DIRECTOR
Wes Geddings

Date:

To:

From:

Your signature is requested to execute the attached bid/contract award documents for:

Bid/Contract No:

Bid/Contract Name:

Department(s) Requesting Contract:

Award Recipient Name:

Contract Description:

☐ Annual Contract ☐ New ☐ Renewal

Estimated Year-to-Date Spend:

☐ Price Increase Requested Increase Percentage:

☐ Project/Service Contract Awarded Amount:

☐ Product Contract Awarded Amount:

Comments:

CONTRACT EXECUTION SIGNATURE REQUEST
PRICE INCREASE DETAILS

Bid/Contract No:

Bid/Contract Name:

HALL COUNTY
GEORGIA
We have it all in Hall

POST OFFICE DRAWER 1435
GAINESVILLE, GA 30503

t: 770.535.8270 | f: 770.531.6711

DIRECTOR
Wesley Geddings

Hall County Government
FINANCIAL SERVICES

STATE OF GEORGIA
COUNTY OF HALL

CONTRACT #021-44

For the provision of

FURNISH AND INSTALL NEW PLAYGROUND EQUIPMENT

At Cool Springs Park in Hall County, Georgia

ARTICLE #101 - INTRODUCTION

This Contract for Services to furnish and install new, outside playground equipment at Cool Springs Park, (herein "Project") located at 5579 Cool Spring Road, Gainesville, GA (hereinafter "Services" and "Project") as entered into on _____ and with an Effective Date of [_____is by and between; Hall County, Georgia (hereinafter "County") located at 2875 Browns Bridge Rd, Gainesville, Georgia 30504, and Bliss Products, located at 6831 S Sweetwater Rd, Lithia Springs, GA 30122, in the amount of $199,872.31. (Hereinafter "Contractor"). Contractor is an entity that is legally registered and qualified, and holding any such licenses and certifications as may be required to render Services to do business in the State of Georgia. County and Contractor are known individually as a "Party" and collectively as the "Parties".

Whereas, the parties do mutually desire to enter into this Contract to document the provision of Services or other valuable consideration by the Contractor to the County in exchange for payment as compensation.

This Contract is the result of the competitively bid **IFB #021-44**, the Bidder's bid response, the Scope of Work, Exhibits, Attachments, and references are all incorporated herein by reference. Therefore, in consideration of the terms, conditions, and mutual promises contained herein, expressed by a valid offer and acceptance, the receipt and sufficiency of which both parties hereby acknowledge, the parties hereto agree as follows:

ARTICLE #102 – CONTRACT

A. Contractor agrees to provide the Services to the County as detailed herein as the **Scope of Work**, and for locations and services as described in the IFB #021-44 and the bidder's response.

Services include furnishing and installing new, outside playground equipment at Cool Springs Park.

B. COMPENSATION: County hereby agrees as good and valuable compensation as provided in the attached bidder's response entitled **Exhibit C – Mandatory Cost Proposal Worksheet,** which shall serve as the Guaranteed Maximum Price Lump-Sum Cost. All payments are in arrears, as the County does not pay for Services not yet rendered.

C. **Price Escalation Clause**. - Reserved

ARTICLE #103 - NOTICES:

To the extent that either party to this Contract are required to provide notice(s) to the other party in compliance herewith, then the party shall direct notice(s) to the following persons:

COUNTY PROJECT MANAGER

Brent Holloway
Director
Hall County Parks & Community Services
bholloway@hallcounty.org
Ph: (678)-997-5823

COUNTY ISSUING OFFICER

Elizabeth White
Purchasing Supervisor
Hall County Finance Department
2875 Browns Bridge Rd
Gainesville, GA 30504
epwhite@hallcounty.org
Ph: (770) 531-4939

CONTRACTOR'S CONTACT INFO

Bliss Products
6831 Sweetwater Rd.
Lithia Springs, GA 30122
Enter Email Address
(800) 248-2547

REMIT-TO ADDRESS

Same

ARTICLE #104 – NON-EXCLUSIVE RIGHTS:

The Contract is not exclusive. The County reserves the right to select other Contractors to provide the Services similar to those described in this Contract, during the term of the Contract should the need arise or the contractor fail to perform.

ARTICLE #105 – CONTRACT TERM:

Until substantial, completion, and all sub-contractor(s) and material suppliers' liens are satisfied.

ARTICLE #106 - CONTRACT AMENDMENTS AND MODIFICATION:

This Contract can only be modified, amended, or added to in writing and fully executed by both parties hereto. This Contract document constitutes the sole and entire Contract and understanding between the parties as to the subject matter hereof, and no verbal promises have been made by either party in relation hereto.

ARTICLE # 107 – REMEDIES AND CONTRACT PERFORMANCE:

In the event that either party to this Contract breaches this Contract, including by failure to meet the timetables set forth herein, the non-breaching party shall provide written notice to the breaching party which describes the breach of this Contract. The party whose breach is alleged shall have thirty (30) days from the date of receipt of the written notice to cure the breach or to otherwise negotiate a resolution of the breach.

If the breach has not been cured and the parties hereto have not resolved the issue described in the notice letter by thirty (30) days after receipt of the notice letter, the party authoring the letter shall be entitled to seek any and all remedies allowed by Georgia law, including damages, equitable relief, declaratory relief, specific performance, and/or seeking relief as to any bonds issued hereon. Additional provisions are;

A. **Delay or Impossibility of Performance**. Any failure or delay must be beyond the control of and without the fault or negligence of the Contractor. If the Services to be provided to the County are interrupted by a Force Majeure Event, as defined below, the County will be entitled to an equitable adjustment to the fees and other payments due to the Contractor under this Contract. If delay results from a subcontractor's negligent conduct or failure to perform, the Contractor shall not be excused from compliance with the terms and obligations of the Contract. Epidemics and pandemics are not considered Force Majeure events by the County.

   Neither party shall be held liable or responsible to the other party nor be deemed to have defaulted under or breached this Agreement for failure or delay in fulfilling or performing any obligation under this Agreement when such failure or delay is caused by or results from causes beyond the reasonable control of the affected party, including but not limited to fire, floods, embargoes, war, acts of war, insurrections, riots, strikes, lockouts or other labor disturbances, or acts of God; provided, however, that the party so affected shall use reasonable commercial efforts to avoid or remove such causes of nonperformance, and shall continue performance hereunder with reasonable dispatch whenever such causes are removed. Either party shall provide the other party with prompt

written notice of any delay or failure to perform that occurs by reason of Force Majeure.

Definition: The term 'force majeure' as defined in Black's Law Dictionary, is 'an event or effect that can be neither anticipated nor controlled. It is a contractual provision allocating the risk of loss if performance becomes impossible or impracticable, especially as a result of an event that the parties could not have anticipated or controlled."

B. Obligations beyond Contract Term. The Contract shall remain in full force and effect to the end of the specified term or until terminated or canceled pursuant to the Contract.

C. Transition Cooperation with the County and Cooperation with other Contractors. Contractor agrees that upon termination of this Contract for any reason, it shall provide sufficient efforts and reasonable cooperation and assistance to the County to ensure an orderly and efficient transition to the County or an alternative Contractor. Further, in the event that the County has entered into or enters into contracts with other Contractors related to the Services, Contractor agrees to cooperate fully with such other Contractors. Contractor shall not engage in any act that will interfere with the performance of work by any other Contractor(s).

ARTICLE # 108 - TERMINATION:

Either party may terminate this Contract by providing thirty (30) days written notice to the other party at any time. Should either party terminate this Contract prior to the date of automatic termination pursuant to section four (4) above, Contractor shall provide the County with all deliverables up to the date of termination thirty (30) days after the Notice to Terminate is issued. The County shall pay the Contractor for all work properly performed in compliance with the terms of the Contract up to the date of termination.

A. **Termination for Convenience**. Following thirty (30) days written notice, either party may terminate the Contract in whole or in part for any reason without the payment of any penalty or incurring any further obligation to the Contractor.

B. **Termination for Cause**. The occurrence of any one or more of the following events shall constitute cause for the County to declare the Contractor in default of its obligations under the Contract:

1. The Contractor fails to deliver or has delivered nonconforming Services or fails to perform, to the County's satisfaction, any material requirement of the Contract or is in violation of a material provision of the Contract, including, but without limitation, the express warranties made by the Contractor.

2. The County determines that satisfactory performance of the Contract is substantially endangered or that a default is likely to occur.

3. The Contractor fails to make substantial and timely progress toward performance of the Contract.

4. The Contractor becomes subject to any bankruptcy or insolvency proceeding under federal or state law to the extent allowed by applicable federal or state law including bankruptcy laws; the Contractor terminates or suspends its business; or the County reasonably believes that the Contractor has become insolvent or unable to pay its obligations as they accrue consistent with applicable federal or state law.

5. The Contractor has failed to comply with applicable federal, state and local laws, rules, County ordinances, regulations and orders when performing within the scope of the Contract.

6. The Contractor has engaged in conduct that has or may expose the County or the State to liability, as determined in the County's sole discretion; or a material breach of the terms of the Contract by County upon County's failure to cure such material breach after written notice thereof has been delivered in accordance with ARTICLE #108.C. below constitutes cause for the Contractor to declare that the County is in default of its obligations under the Contract.

C. **Notice of Default**. If either party causes one or more of the default events set out in ARTICLE #108, then either party shall issue a written Notice-of-Default to the party that causes one or more of the default events, requesting that the breach or noncompliance be remedied within the period of time specified in the party's Notice-of-Default to the Contractor. If the breach or noncompliance is not remedied within the period of time specified in the written notice, the non-breaching party may:

1. Immediately terminate the Contract for default without additional written notice.

2. In the event of a breach by the Contractor, the County may procure substitute Services from another source and charge the difference between the Contract and the substitute Contract to the defaulting Contractor; and/or,

3. Enforce the terms and conditions of the Contract and seek any legal or equitable remedies.

D. **Termination Due to Non-Availability of Funds.**
This Contract will terminate immediately and absolutely if the County determines that adequate funds are de-appropriated such that the County cannot fulfill its obligations under the Contract, such

determination being at the County's sole discretion and conclusive. County agrees to provide prompt written notice to Contractor in the event of any de-appropriation.

E. **Termination due to Failure of Contractor to Act.**
The County may terminate the Contract for any one or more of the following reasons effective immediately without advance notice:

1. In the event that the Contractor must be certified or licensed as a condition precedent to providing the Services, the revocation or loss of such license or certification may result in immediate termination of the Contract effective as of the date on which the license or certification is no longer in effect.

2. The County determines that the actions, or failure to act, of the Contractor, its agents, employees or sub-Contractors have caused, or reasonably could cause, life, health or safety to be jeopardized.

3. The Contractor furnished any statement, representation, or certification in connection with the Contract or the bidding process, which is materially false, deceptive, criminal activity, incorrect or incomplete.

4. Failure of the Contractor to obtain, provide, maintain, and deliver the Performance and Payment Bonds (if required) as and when required under this Contract, or failure to comply with any requirement pertaining to the appropriate amounts thereof as set forth in ARTICLE #123 - PERFORMANCE AND PAYMENT BOND REQUIREMENT.

F. Payment Limitation in Event of Termination. In the event of termination of the Contract for any reason by either party, the County shall pay only those amounts, if any, due and owing to the Contractor for Services actually received and accepted by the County up to and including the date of termination of the Contract and for which the County is obligated to pay pursuant to the Contract.

G. The Contractor's Termination Duties. Upon receipt of notice of termination, the Contractor shall:

1. Cease work under the Contract and take all necessary or appropriate steps to limit disbursements and minimize costs and furnish a report within thirty (30) days of the date of notice of termination, describing the status of all work under the Contract, including, without limitation, results accomplished, conclusions resulting therefrom, and any other matters the County may require.

2. Immediately cease using and return to the County, any personal property or materials, whether tangible or intangible, provided by the County to the Contractor.

3. Comply with the County's instructions for the timely transfer of any active files and work product produced by the Contractor under the Contract.

4. Cooperate in good faith with the County, its employees, agents, and Contractors during the transition period between the notification of termination and the substitution of any replacement Contractor; and

5. Immediately return to the County any payments made by the County for goods and services that were not delivered by the Contractor.

H. **Liquidated Damages. - Reserved**

ARTICLE # 109 – NO DEFENSE OR INDEMNIFICATION BY COUNTY:

The parties agree that the County shall not be responsible for defending or indemnifying any Contractor from any claim brought by any third party against the Contractor.

ARTICLE #110 - ASSIGNMENT AND DELEGATION BY CONTRACTOR:

The Contractor shall not assign or delegate this Contract, or any performance required by it, in whole or in part, without the prior express written consent of the County.

ARTICLE #111 – USE OF THIRD PARTIES (SUB-CONTRACTORS):

This Contract is for the benefit of the parties hereto only and is not intended to benefit any third-party or give rise to any duty or causes of action for any third party. All restrictions, obligations and responsibilities of the Contractor under the Contract shall also apply to third parties such as sub-Contractors, if allowed in writing by the County. Any Contract with a subcontractor must also preserve the rights of the County.

ARTICLE #112 – SUPERSEDES FORMER CONTRACTS

Unless otherwise specified in the Contract, this Contract supersedes all prior Contracts or Agreements between the County and the Contractor for the Services provided in connection with the Contract.

ARTICLE #113 - SEVERABILITY:

If any paragraph, sub-paragraph, sentence, clause, phrase, or portion of this Contract is declared invalid or unconstitutional by any Court of competent jurisdiction or if the provisions of any part of this Contract as applied to any particular situation or set of circumstances shall be declared invalid or unconstitutional, such invalidity shall not be construed to affect the remaining portions of this Contract not so held to be invalid or the application of this Contract to other circumstances not so held to be invalid.

ARTICLE # 114 - RECORDS:

A. **Public Records Request**. The Georgia Open Records Act, as provided in O.C.G.A. § 50-18-70 et seq, requires procurement records and all other records received by or prepared or maintained on behalf of the County, shall be made open to public inspection, unless otherwise provided by law.

B. **Record Retention and Access**. The Contractor shall maintain books, records, and documents in accordance with generally accepted accounting principles and procedures and which sufficiently and properly document and calculate all charges billed to the County throughout the term of the Contract for a period of at least five (5) years following the date of final payment or completion of any required audit, whichever is later. Records to be maintained include both financial records and service records.

ARTICLE # 115 - ADDITIONAL TERMS:

A. The County shall not be bound by any terms and conditions included in any Contractor's literature, packaging, invoice, catalog, brochure, technical data sheet, on-line representation, warranties or service level agreement or other document which attempts to impose any condition in variance with or in addition to the terms and conditions contained herein.

B. The County shall not be bound to any Terms and Conditions of the Contractor that are only accessible by hyper-link. All Terms and Conditions must be in print and approved by the County.

ARTICLE # 116 - WAIVER:

The failure of any party hereto to seek a remedy for any alleged breach of this Contract shall not constitute a waiver of any claim, cause of action, or remedy allowed by Georgia law for breach thereof.

ARTICLE # 117 - CONTRACTOR AND COUNTY RIGHTS AND OBLIGATIONS:

A. The County has the right to issue a written Stop Work Order at any time to require the Contractor cease any procedure, or the use of any equipment materials or chemicals considered by the County to be hazardous (or toxic) to persons, buildings, or surfaces. The Contractor will utilize acceptable substitutes as quickly as possible.

B. The County has the right to require the Contractor to reassign or remove any employee or subcontractor's employee from the premises temporarily or permanently when, in the County's sole opinion, the employee is not suitable.

The County's decision on this matter shall be final, and Contractor will remove this employee immediately and replace with a person of at least equivalent training, experience and requisite qualifications as quickly as possible, subject to the County's prior approval.

C. Contractor agrees to obtain prior written approval from the County for the use of sub-Contractors to provide the Services described in *SCOPE OF WORK* prior to subcontractor's performance of work.

ARTICLE # 118– INSURANCE REQUIREMENTS:

Workers Compensation Insurance: Required for all contracts.

a. $500,000 Bodily Injury by Accident Each Accident
b. $500,000 Bodily Injury by Disease Each Disease
c. $500,000 Bodily Injury by Disease Each Employee

Additional Provisions: Waiver of Subrogation. The insurer agrees to waive all rights of subrogation against Hall County Board of Commissioners (BOC), its elected or appointed officers, officials, agents, authorized volunteers and employees for losses paid under the terms of this policy which arise from work performed by the Named Insured for Hall County BOC; but this provision applies regardless of whether or not Hall County BOC has received a waiver of subrogation from the insurer.

General Liability Insurance: Required for all contracts.

a. $2,000,000 General Aggregate
b. $2,000,000 Products & Completed Operations Aggregate
c. $1,000,000 Each Occurrence
d. $1,000,000 Personal & Advertising Injury
e. $500,000 Damages to Premises / Fire / Legal
f. $5,000 Medical Payments

Commercial Auto Liability Insurance: Required for all contracts, except for Goods and/or Services that are remote in nature and/or are delivered by a professional delivery service.

a. $1,000,000 Combined Single Limit OR
b. $500,000 per Person
c. $500,000 per Occurrence
d. $100,000 Property Damage
e. $1,000 for Medical Payments (no fault coverage)

Additional Provisions:

a. Uninsured motorists coverage should be equal to the per occurrence limit except for contracts with other governmental entities
b. Coverage shall be included for any owned, leased, hired, or non-owned autos
c. For any contracts involving the transportation of hazardous materials, limited pollution endorsement ISO form CA9948 or its equivalent shall be on the policy

Umbrella Liability Insurance: Required for all contracts

a. $1,000,000 per Occurrence

Additional Provisions:

a. Underlying coverage shall be General Liability, Automobile Liability, and Employers Liability (Workers Compensation)
b. Minimum limit of $5,000,000 per occurrence for all contracts over $1,000,000 or involving any special risks or high hazard activities
c. Minimum limit of $5,000,000 for automobile coverage for any transportation contracts involving seniors, special education, transit services, students, or youths.
d. Concurrent policy dates with primary liability policies except for workers compensation

B. **Insurance Certificates and General Requirements.** No Contract performance shall occur unless and until the County receives required insurance certificates.

The insurance certificate must reference the Contract number assigned by the County and document that the liability coverage purchased by the Contractor includes contractual liability coverage to insure the indemnity agreement as stated herein.

C. The Contractor understands and agrees that the foregoing policies will not be canceled, or not renewed or allowed to lapse for any reason until at least thirty (30) days prior written notice has been given to the County, or until such time as other valid and effective insurance coverage acceptable in every respect to the County and providing protection equal to protection called for in the policies referenced in this section shall have been received, accepted, and acknowledged by the County. Certificates of insurance showing such coverage to be in force shall be filed with the County prior to commencement of any work under the Contract. The foregoing policies shall be obtained from insurance companies licensed to do business in Georgia and, unless waived or modified in writing by the County, shall be an insurer with a minimum A.M. Best Rating of "A-". All such coverage

shall remain in full force and effect during the term and any renewal or extension thereof. The insurance certificate must be submitted with this Contract.

D. **Waiver of Subrogation.** There is no waiver of subrogation rights by either Party with respect to insurance.

ARTICLE # 119 – NO WAIVER:

A. **Authority to Enter into Contract.** The Contractor represents and warrants that it has full authority to enter into and perform its obligations under the Contract and that the Contract constitutes a legal, valid, and binding obligation upon the Contractor in accordance with its terms. The representatives of the parties hereto also represent and warrant that they are authorized to sign this Contract on behalf of each party hereto."

B. **Solicitation**. The Contractor warrants that no person or selling agency (except bona fide employees or selling agents maintained for the purpose of securing business) has been employed or retained to solicit and secure the Contract upon an agreement or understanding for commission, percentage, brokerage or contingency.

ARTICLE # 120 – INTELLECTUAL PROPERTY RIGHTS and OWNERSHIP:

Contractor agrees it will not use the name or any intellectual property, including but not limited to, County trademarks or logos in any manner, including commercial advertising or as a business reference, without the expressed prior written consent of the County.

ARTICLE # 121 - COMPENSATION:

A. The County will pay the Contractor for the Services provided pursuant to this Contract and in accordance with the prices quoted and conditions set forth in the Bidder's response on Exhibit C – Mandatory Cost Proposal Worksheet**,** which is attached hereto and incorporated into this Contract as if fully set forth herein. Payments will be made monthly in arrears to the Contractor after acceptance of the Contractor's delivered Services by the County, and after receipt of undisputed invoice to the County.

B. Prices quoted shall be firm and fixed throughout the term of this Contract, unless otherwise Amended or Modified by mutual agreement.

C. Cost may be prorated for Services added or removed under this Contract to align cost with the remaining term of Contract.

D. It is understood that this bid or proposal is made without collusion or fraud. Contractor understands and acknowledges that collusive bidding is a violation of state and federal law and may result in the cancellation of the Contract.

ARTICLE # 122 - COUNTY PAYMENT TO CONTRACTOR:

A. The County will issue a Notice to Proceed (NTP) to the Contractor, and Purchase Order(s) (herein after 'PO'). The terms of this Contract shall be incorporated by reference into any and all PO(s) issued prior to the expiration or termination of this Contract. The County will issue the PO by electronic mail (e-mail) to the Contractor's representative in *ARTICLE #103 - NOTICES*. A PO is considered "issued" when the e-mail containing the PO is sent by the County to the Contractor.

The Contractor shall not deliver any Services, equipment, devices, or components thereof until authorized in writing by the County through issuance of a PO, which shall provide a commencement Notice to Proceed date. Any work, including but not limited to travel, preliminary meetings, planning, etc., performed outside of the terms and conditions of and before the issuance of the PO will not be considered for payment. Contractors are not to begin work or ship any product on any verbal communication from within the County. The County will not be liable for payment for any work or product with the issuance of a verbal communication.

The Scope of Work shall remain in effect from the Notice to Proceed to completion of the project. The Parties agree that the County will not pay or otherwise compensate the Contractor for any Services, materials, equipment, devices or components thereof outside of the Scope of Work and/or beyond the term of this Contract, unless specifically authorized in writing as evidenced by an amendment (see *ARTICLE #106 - CONTRACT AMENDMENTS &, MODIFICATION*), a time extension letter, or as otherwise authorized by the County.

B. **Invoice/Payment.**

1. Contractor shall invoice the County via email solely to accountspayable@hallcounty.org and only after the County inspects and accepts the Services provided. Receipt of the Services does not constitute acceptance. Invoice amounts shall not exceed the Contractor's pricing set forth in *ARTICLE #102.*
2. Each invoice shall include the Contractor's current "Remit to" address; a description and location of the Services provided; the invoice amount; the Contract number and the associated PO number issued. Each properly prepared invoice must be sent in accordance with the instructions listed on the PO. Standard payment terms are net 30 days (N30) in arrears from the date the invoice is accepted, following delivery of the Services.

3. The County does not pay for services not yet received but only in arrears.
4. The Contractor shall be solely responsible for paying all costs, expenses and charges it incurs in connection with its performance under the Contract, which includes release of any liens from all sub-contractors and material providers.

C. **Unsatisfactory Performance; Delay of Payment.**

1. If the County determines that the quality of the Services provided are deficient, unacceptable, or unsatisfactory, the County's Project Manager identified in *ARTICLE #103* shall issue a written notice to Contractor. Contractor agrees that upon receipt of the written notice, it shall make every effort to correct the deficiency (ies) within the timeframe prescribed therein. If the Contractor fails to timely correct the deficiencies, the County reserves the right to delay or withhold payment pursuant to this *ARTICLE #122* or terminate the Contract (*ARTICLE #108 – TERMINATION PROVISIONS*).
2. **Delay of Payment Due to Contractor's Failure.** If the County determines that the Contractor has failed to perform or deliver any Services as required by the Contract, the Contractor shall not be entitled to any compensation under the Contract until such Services are delivered and accepted. In this event, the County may withhold that portion of the Contractor's compensation, which represents payment for Services that were not delivered. To the extent that the Contractor's failure to perform or deliver in a timely manner causes the County to incur costs, the County may deduct the amount of such incurred costs from any amounts payable to Contractor. The County's authority to deduct such incurred costs shall not in any way affect the County's authority to terminate the Contract.

D. **Set-Off Against Sums Owed by the Contractor**. In the event that the Contractor owes the County any sum under the terms of the Contract, pursuant to any judgment, or pursuant to any law, the County may set off the sum owed by the Contractor against any sum owed to the Contractor, in the County's sole discretion.

E. **Final Payment.** Contractor shall issue an invoice for final payment to the County no later than thirty (30) days following the expiration or termination date of the Contract.

F. The Contractor must not "Factor or Assign Payments" to another or a financial institution. The County will only pay the party to whom it is contracted with. The County will not in any circumstances pay a third party.

ARTICLE #123 – PERFORMANCE AND PAYMENT BONDS

The Contractor must furnish to the County a Performance Bond equal to one-hundred percent (100%) of the Contract's total initial term dollar amount, and additionally a Payment Bond equal to one-hundred percent (100%) of the total initial term dollar amount. After receipt of the bonds, the County will issue a Notice-to-Proceed. Only surety companies licensed to do business in the State of Georgia are acceptable. The Contractor is required to provide new bonds at the issuance of each Renewal Option Term(s) or Extension(s) that follow.

The Contractor must provide all required bonding instruments to the County prior to commencement of any work. The County will consider any work done prior to the receipt of bonding instruments as null-and-void and thus not eligible for compensation.

ARTICLE #124 – RETAINAGE

The County will retain funds from compensation in compliance with Georgia law. Hall County may hold up to five-percent (5%) retainage throughout the entire project and will release said retainage at the point of completion and final acceptance by the County and issuance of Occupancy Permit by County.

ARTICLE #125 – VENUE AND GOVERNING LAW

The parties agree that this Contract shall be interpreted, construed, and enforced in accordance with the laws of the State of Georgia. To the extent that either party may bring a legal suit to enforce the terms of this Contract, including suit in equity, the parties agree and consent to file any such suit in the Superior Court of Hall County, Georgia.

ARTICLE # 126 - NOTICE OF INTENT TO LITIGATE

Contractor hereby agrees not to file any civil action of disputes or claims relating to the Contract except after first giving thirty days (30) written notice to the County of the claim and the intent to initiate a civil action.

ARTICLE # 127- GEORGIA SECURITY AND IMMIGRATION COMPLIANCE ACT:

A. By signing this Contract, the Contractor certifies that prior to and throughout the performance of all applicable work under this Contract it will remain in full compliance with all federal and state immigration laws, including but not limited to 8 U.S.C. § 1324a and the Georgia Security and Immigration Compliance Act (O.C.G.A. §13-10-90 et seq.), as amended by the Illegal Immigration Reform and Enforcement Act of 2011, regarding the verification of employment eligibility of employees under the Immigration Reform and Control Act of 1986. Contractor will ensure that only persons who are citizens or nationals of the United States or non-citizens authorized under federal

immigration laws are employed to perform services under this Contract or any subcontract or sub-subcontract hereunder.

B. Contractor further certifies its compliance with the aforementioned federal and state immigration laws set forth by signing a sworn affidavit, the Georgia Security and Immigration Compliance Act Affidavit, notarized by an Official Notary Public, and obtaining the same affidavits from any sub-contractor providing services pursuant to this Contract.

ARTICLE # 128 – ORDER OF PRECEDENCE:

In the event of any inconsistency, ambiguity, or conflict among the specific provisions of the Contract and the Contractor's Response, the order of precedence shall be as follows:

A. First, any amendments to the Contract, including all Exhibits thereto.
B. Second, the Contract itself, including all Exhibits thereto.
C. Third, Attachments appended to the Contract.

ARTICLE # 129– CONTRACT EXHIBITS AND ATTACHMENTS:

The Parties mutually acknowledge that any following Exhibits and Attachments listed below made a part of this Contract, as though expressly written in the RFQ/P documents and the bidder's response, are-herein-incorporated into this contract by reference.

EXHIBIT C - Mandatory Cost Proposal

ARTICLE # 130 - ENTIRE CONTRACT:

This Contract, as executed and approved, shall constitute the entire agreement between the Parties and supersedes all other prior and contemporaneous statements, agreements, and understandings between the Parties. No written or oral statements, agreements, or understandings that are not set out, referenced, or specifically incorporated in this Contract shall in any way be binding or of effect between the Parties.

ARTICLE # 131– VALIDITY

If any paragraph, sub-paragraph, sentence, clause, phrase or any portion of this agreement shall be declared invalid or unconstitutional by any Court of competent jurisdiction or if the provisions of any part of this agreement as applied to any particular situation or set of circumstances shall be declared invalid or unconstitutional, such invalidity shall not be constructed to affect the portions of this agreement not so held to be invalid or the application of this agreement to other circumstances not so held to be

invalid. The parties hereby declare that this is the intent of the parties to this agreement is to provide for separate and divisible parts.

ARTICLE #132 – SALES TAX EXEMPTION STATUS

The County is exempt from Federal Excise Taxes and from Georgia State and Local Sales and Use Taxes on the Services. The Contractor may request a copy of the County's Georgia Sales and Use Tax Exemption Certificate.

ARTICLE #133 – HOLD HARMLESS AGREEMENT

The successful respondent hereby agrees to indemnify, hold free and harmless, Hall County Government, County Commissioners, its agents, servants, employees, officers, directors and elected officials, or any other person(s) against any loss or expense. This includes attorney fees, because of any liability imposed by law upon the County, except in cases of the County's sole negligence, sustained by any person(s) on account of bodily injury or property damage arising out of or in the consequence of this agreement.

ARTICLE # 134 – CONTRACT TERMS AND CONDITIONS

1. All purchases must comply with The Official Code of Hall County Sections 3.10.010 – 3.10.190.
2. If any conflict or ambiguity arises between the Terms and Conditions herein, and The Official Code of Hall County, the latter will govern.
3. The Terms and Conditions set forth herein shall supersede and govern over all Contractor's Terms and Conditions or Service Level Agreements.
4. Hall County, Georgia, herein referred to as 'The County', retains the right to 'red-line' sections of the Supplier's Terms and Conditions if such are in conflict with the best interest of the County.
5. Acceptance of a Purchase Order (PO) and delivery of Goods or Services serves as the Supplier's full and complete acceptance of The County's Terms and Conditions.
6. The terms; supplier, vendor, bidder, offeror, Contractor, Contractor, designer, distributor, dealer or manufacturer or otherwise purveyor or source of supply or performance of service shall mean one-and-the-same, herein denoted as 'Supplier' for goods and 'Contractor' for services.
7. Furthermore, the terms; goods, materials, commodities, components, drawings, drafts, renderings, plans, physical or digital, software, SaaS, Engineering, Architectural, capital asset equipment, vehicles, heavy earth-moving or other equipment, purchased or leased, or other such deliverables are herein denoted as 'Goods' and shall mean one-and-the-same.
8. 'Services' shall mean all services, either financial, advisory, consultative, labor, staff augmentation, construction, rehabilitation, restoration, repair, support or maintenance, communication, telephony, internet, TV or streaming, pest control, grounds maintenance, custodial and janitorial, street or paved surfaces cleaning, drain cleaning or otherwise where services are offered for consideration.
9. The County's payment terms are Net 30 days.
10. The Supplier shall transfer and deliver all goods or services described on the attached PO for the consideration set forth herein.

11. The Supplier shall only deliver goods and services as described on the PO and within the Scope of Work and the Supplier's Bid Response.
12. The County holds no obligation to pay for goods delivered or services rendered unless specified on a written Purchase Order or a Change Order of such.
13. The Supplier shall not construe any verbal consent to purchase goods or services as valid.
14. The County does not accept substitutions of services or goods that do not comply with the Scope of Work or Specifications set forth in the Purchase Order, Contract or Agreement, unless mutually agreed in writing by both parties.
15. The County does not accept automatic contract renewals with the exception of monthly subscription services.
16. The County only pays for services rendered in arrears. The County does not pay for services not yet rendered.
17. The County does not pay deposits towards goods ordered. Exceptions exist for custom made items (such as window coverings and blinds, or carpet, tile etc.), fabrication, decoration, or otherwise custom designed specifically for the County.
18. The County will accept backorders only if goods are out of stock and with prior written notice. Supplier's shall ship all quantities that it has in stock and hold orders for backorders.
19. The County participates in Cooperative Purchasing Agreements, State of Georgia Statewide Contracts, and other state, local, Intergovernmental Agreements, Memorandums-of-Understanding and other such Agreements.
20. In all cases, the jurisdiction shall be the State of Georgia, County of Hall, for arbitration or other legalities
21. Deliveries go to the ship-to addresses listed on the PO and within the time specified. The Supplier must follow instructions if multiple ship-to address exist on the PO.
22. Risk of loss of the goods shall pass to The County upon inspection and acceptance only.
23. Receipt of goods or services does not constitute acceptance.
24. Title to the goods shall remain with the Supplier until acceptance by The County.
25. The Supplier warrants that the goods are merchantable and that the Supplier has a legal right to deliver the goods and services and as described herein.
26. The County shall have the right to inspect all goods or services at the time and place of delivery.
27. Vendor agrees not to assign in full or part of the Contract to another party without the County's express written consent. Any attempted assignment or delegation shall void and make ineffectual for all purposes unless made in conformity with this paragraph.
28. The County is exempt from Federal Excise Tax and Georgia Sales and Use Tax.
29. This issuance of the PO shall not violate the Code of Ethics and Conflicts of Interest for Public Officers and Employees for Government Service set forth in the 2020 Section 45-1020 *et seq.* of the Official Code of Georgia Annotated and the Official Code of Hall County Section 3.10.070 governing Ethics.
30. All goods and services supplied pursuant to this PO shall, unless otherwise noted, must conform exactly to all of the descriptions, specifications, Exhibits and attachments contained in the Bid Solicitation upon which a PO is based and all the terms, conditions, and specifications of the Bid Solicitation are incorporated herein by reference and made a part hereof.
31. Any-and-all media production, recordings, videos, photography, artwork, plates, engravings, and other printed or digital media materials paid in full by The County is considered County property and shall be delivered to The County upon request.

32. Invoices submitted to The County will reflect the language of the PO with the PO Number printed on each invoice submitted.
33. In the event that a PO has an attached Contract or Agreement, the terms and conditions of the latter shall govern in the event of any conflict with these terms and conditions.
34. The Supplier may be suspended, terminated, or debarred if it is determined that the Supplier has made false certification(s) or has violated such certification(s) by failure to carry out the requirements herein.
35. The Supplier certifies that it and its subcontractors are not been debarred, suspended, or declared ineligible by any agency of the County, or State of Georgia or as defined in the Federal Acquisition Regulation (FAR) 48 C.F.R. Ch. 1 Subpart 9.4.
36. The Supplier certifies that the Supplier is not currently engaged in an active or pending lawsuit or other grievance, injunction, or levy against the County.
37. Goods are Free-On-Board (F.O.B.) destination and freight, shipping and delivery shall be pre-paid and added to the invoice as a separate line item.
38. The County does not pay late fees nor interest charges.
39. The Supplier shall charge the County the exact amount of freight, delivery, handling and insurance charges.
40. The County is not bound to any minimum or maximum quantity or dollar amount set by the Supplier
41. In the event there is a discrepancy between the unit price and extended price, the unit price shall govern.

[Signature Page Follows]

IN WITNESS WHEREOF, said Parties have hereunto affixed their signature and seal on the day, month, and year first above written:

Company's Full Legal Name

By: _____

Title: President

Print Name: Gregg Bliss

Sworn to and subscribed before me this

27 Day of June, 2023

Notary Public: Donna Moore

Notary commission expires: 3/29/26

[[Locus Sigilli]]

DONNA MOORE
NOTARY PUBLIC
DOUGLAS COUNTY, GEORGIA
MY COMMISSION EXPIRES MARCH 29, 2026

HALL COUNTY, GEORGIA

By: _____
Richard Higgins, Chairman
Hall County Board of Commissioners

Attestation: _____
County Clerk

APPROVED AS TO FORM:

William J. Linkous III, County Attorney

EXHIBIT C

IFB # 021-44

FURNISH AND INSTALL NEW PLAYGROUND EQUIPMENT

MANDATORY COST PROPOSAL WORKSHEET

Company Name: Bliss Products and Services, Inc.

Bidder's Name: Gregg Bliss

Bidder's Signature: Gregg Bliss

Date: 6/27/2023

Instructions: Complete the lump sum totals below
Furnish and Install all materials, equipment, supervision and labor to complete the project to occupancy.

Line	Amount
Playground Structures	$ 199,872.31 (option 1) $ 192,222.05 (option 2)

Line	Time Frame
Material Lead Time	10 WEEKS ARO
Estimated Completion Date	116 WEEKS ARO

IFB #021-44

FURNISH AND INSTALL NEW PLAYGROUND EQUIPMENT

Bid Tabulation Summary

Bidder	**Playcore Wisconsin, In, Fort Payne, AL**	**Great Southern Recreation LLC, Atlanta, GA**	**Bliss Products, Lithia Springs, GA**	**Playsouth LLC, Newnan, GA**
Playground Structures	$ 198,288.78	$ 160,000.00	$ 199,872.31	$ 215,000.00
Material Lead Time	7 Weeks	27 Weeks	10 Weeks	16 Weeks
Estimated Completion Date	14 Weeks	31 Weeks	16 Weeks	3 Weeks after Delivery

6/29/2023 EPW

*Great Southern Recreation LLC is the lowest cost bidder however, they also have the longest material lead and completion times.

HONEYDEW

COOL SPRINGS PARK - OPTION 1

GAINSVILLE, GA

645-161398

PLEASE NOTE: RENDERINGS ARE FOR VISUAL PURPOSES ONLY. ANY PRODUCTS AND/OR SITE DETAILS HEREIN MAY BE SUBJECT TO CHANGE WITHOUT NOTICE.

BLISS PRODUCTS
everything under the sun

play&park structures
A PLAYCORE Company

544 CHESTNUT ST.
CHATTANOOGA, TN 37402
800.727.1907
PLAYANDPARK.COM

HONEYDEW

COOL SPRINGS PARK - OPTION 1

GAINSVILLE, GA

645-161398

PLEASE NOTE: RENDERINGS ARE FOR VISUAL PURPOSES ONLY. ANY PRODUCTS AND/OR SITE DETAILS HEREIN MAY BE SUBJECT TO CHANGE WITHOUT NOTICE.

BLISS PRODUCTS
everything under the sun

play&park structures
A PLAYCORE Company

544 CHESTNUT ST.
CHATTANOOGA, TN 37402
800.727.1907
PLAYANDPARK.COM

HONEYDEW

COOL SPRINGS PARK - OPTION 1

GAINSVILLE, GA

645-161398

PLEASE NOTE: RENDERINGS ARE FOR VISUAL PURPOSES ONLY. ANY PRODUCTS AND/OR SITE DETAILS HEREIN MAY BE SUBJECT TO CHANGE WITHOUT NOTICE.

BLISS PRODUCTS
everything under the sun

play&park structures
A PLAYCORE Company

544 CHESTNUT ST.
CHATTANOOGA, TN 37402
800.727.1907
PLAYANDPARK.COM

HONEYDEW

COOL SPRINGS PARK - OPTION 1

GAINSVILLE, GA

645-161398

PLEASE NOTE: RENDERINGS ARE FOR VISUAL PURPOSES ONLY. ANY PRODUCTS AND/OR SITE DETAILS HEREIN MAY BE SUBJECT TO CHANGE WITHOUT NOTICE.

BLISS PRODUCTS
everything under the sun

play&park structures
A PLAYCORE Company

544 CHESTNUT ST.
CHATTANOOGA, TN 37402
800.727.1907
PLAYANDPARK.COM

HONEYDEW

COOL SPRINGS - OPTION 1

GAINSVILLE, GA

645-161398

PLEASE NOTE: RENDERINGS ARE FOR VISUAL PURPOSES ONLY. ANY PRODUCTS AND/OR SITE DETAILS HEREIN MAY BE SUBJECT TO CHANGE WITHOUT NOTICE.

BLISS PRODUCTS
everything under the sun

play&park structures
A PLAYCORE Company

544 CHESTNUT ST.
CHATTANOOGA, TN 37402
800.727.1907
PLAYANDPARK.COM

HONEYDEW

COOL SPRINGS - OPTION 1

GAINSVILLE, GA

645-161398

PLEASE NOTE: RENDERINGS ARE FOR VISUAL PURPOSES ONLY. ANY PRODUCTS AND/OR SITE DETAILS HEREIN MAY BE SUBJECT TO CHANGE WITHOUT NOTICE.

BLISS PRODUCTS
everything under the sun

play&park structures
A PLAYCORE Company

544 CHESTNUT ST.
CHATTANOOGA, TN 37402
800.727.1907
PLAYANDPARK.COM

HONEYDEW

COOL SPRINGS PARK - OPTION 1

GAINSVILLE, GA

645-161398

PLEASE NOTE: RENDERINGS ARE FOR VISUAL PURPOSES ONLY. ANY PRODUCTS AND/OR SITE DETAILS HEREIN MAY BE SUBJECT TO CHANGE WITHOUT NOTICE.

BLISS PRODUCTS
everything under the sun

play&park structures
A PLAYCORE Company

544 CHESTNUT ST.
CHATTANOOGA, TN 37402
800.727.1907
PLAYANDPARK.COM

HONEYDEW

COOL SPRINGS PARK - OPTION 1

GAINSVILLE, GA

645-161398

PLEASE NOTE: RENDERINGS ARE FOR VISUAL PURPOSES ONLY. ANY PRODUCTS AND/OR SITE DETAILS HEREIN MAY BE SUBJECT TO CHANGE WITHOUT NOTICE.

BLISS PRODUCTS
everything under the sun

play&park structures
A PLAYCORE Company

544 CHESTNUT ST.
CHATTANOOGA, TN 37402
800.727.1907
PLAYANDPARK.COM

Cool Springs Park
Option 1
Gainesville, Georgia

Bliss Products and Services

This play equipment is recommended for children ages:
5-12

Minimum Area Required:
98'-9" x 57'-5"

Scale: 1/8" = 1'-0"
This drawing can be scaled only when in an 11" x 17" format

Drawn By:
Chris Yates
Date:
6/27/23
Quote Number:
645-161398

play&park structures
A PLAYCORE Company
544 Chestnut Street
Chattanooga, TN 37402
800-727-1907 / www.playandpark.com

Total Play Components	21		
Elevated Play Components	19		
Elevated Play Components Accessible by Ramp	12	Req.	10
Elevated Components Accessible by Transfer	19	Req.	4
Accessible Ground Level Components Shown	2	Req.	0
Different Types of Ground Level Components	1	Req.	0

User Capacity
100-120
Critical Fall Height
8'-0"

SUPERmax PLAY SYSTEMS

ISO 9001 CERTIFIED

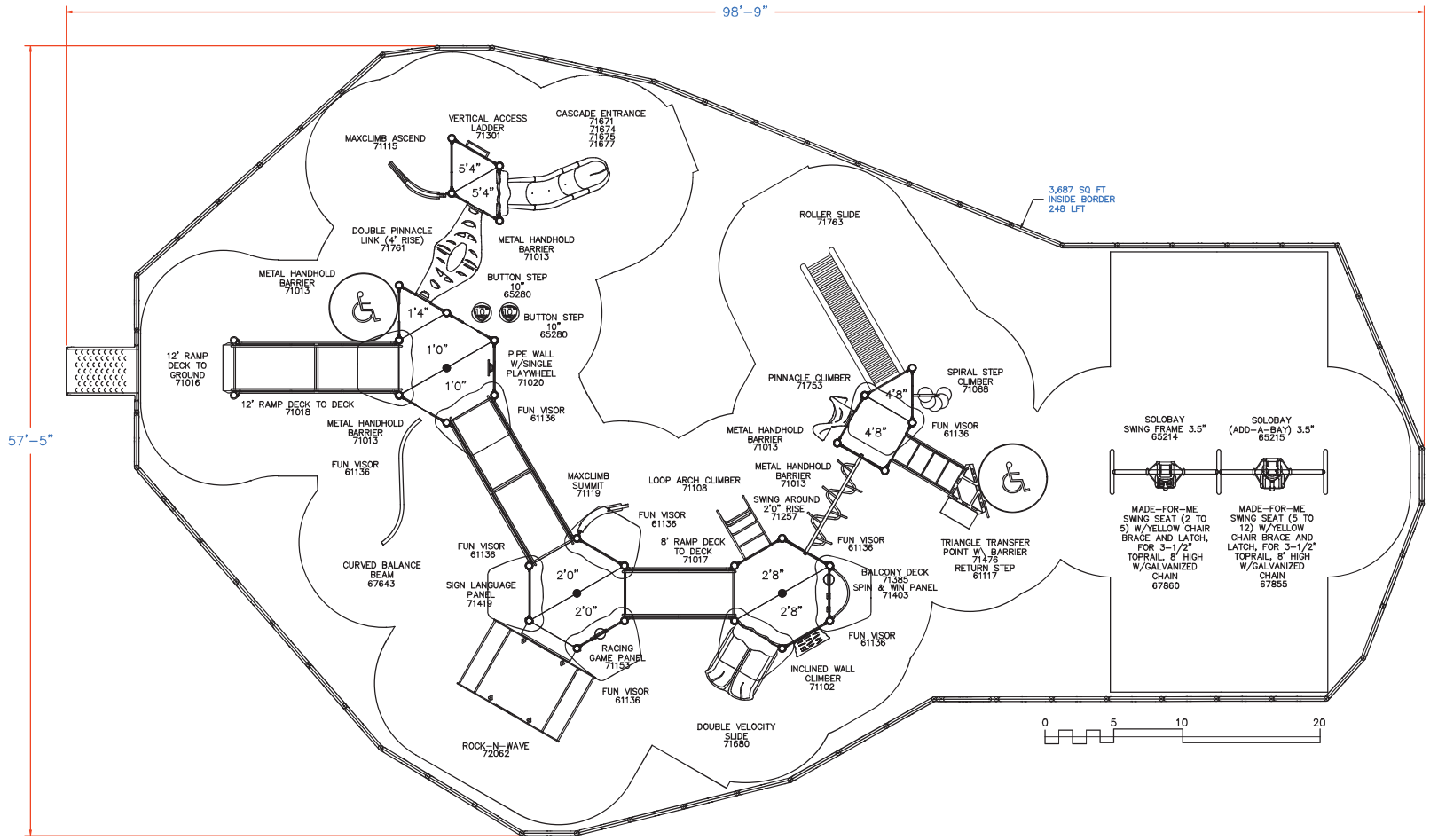

It is the manufacturer's opinion that the structure shown herein complies with current ada standards concerning accessibility if used with proper accessible surfacing and together with other necessary ground level play equipment.
Top View drawings and measurements are for overall site and structure appearance purposes. Top view should not be conceived as a construction detail; therefore, all measurements and slope requirements should be field verified prior to construction.
IMPORTANT: Never install play equipment over hard, unresilient surfaces such as asphalt, concrete, or compacted earth. It is the owner's responsibility to ensure the "minimum area required" contains an appropriate amount of resilient material to cushion accidental falls.

AGENDA ITEM

Consent Agenda

REPORT TO: **Work Session (07/10/23)**

REPORT TO: **Voting Meeting (07/13/23)**

ITEM NO: 370/2023

SUBJECT: Approve the amendment to the November 17, 2022 Meeting Minutes regarding item 17 (Application of Atlas Development Services, Inc.) to correct a scrivener's error.

Meetings:

Work Session Date: 07/10/23 **Voting Meeting Date:** 07/13/23

Executive Summary:

Presenter: WJLI

Recommendation:
Approval.

Purpose of Request:
Approve the amendment to the November 17, 2022 Meeting Minutes regarding item 17 (Application of Atlas Development Services, Inc.) to correct a scrivener's error.

History:

Facts and Issues:
The approved November 17, 2022 Meeting Minutes did not include the correct conditions as approved in the Meeting due to a scrivener's error. The amended minutes have the corrected conditions which are conditions 3 and 24.

Item 17 was approved with a vote of 4-0 with Commissioner Cooper recusing herself.

Options:

Funding Requested	$ 0.00
Are funds within current budget?	No
Source of Funds	
Does the action involve a Resolution, Ordinance, Contract, Agreement, etc.?	No
Has it been reviewed by the County Attorney?	Yes
Is there a deadline for this item?	

Approvals:

Approve	Attorney	Administration	Clerk
JR	WLI	CR	JR

Attachments:

November 17, 2022 - Revised Meeting Minutes
November 17, 2022 - ORIGINAL Meeting Minutes

HALL COUNTY BOARD OF COMMISSIONERS
MEETING MINUTES
Hall County Government Center 2nd Floor
2875 Browns Bridge Road
Gainesville, GA 30504
Streamed Live on Hall County Government's Website - www.hallcounty.org
Thursday, November 17, 2022 - 06:00 PM

Call to Order

Chairman Higgins at 6:01 p.m.

Present:

Chairman Richard Higgins, Vice-Chairman Kathy Cooper and Commissioners Billy Powell, Shelly Echols, and Jeff Stowe

Also present were County Administrator Jock Connell, Assistant County Administrator Zach Propes, Deputy Commission Clerk Abril Olivas, County Attorney Van Stephens, and Deputy County Attorney William Linkous III

Approve Agenda

Commissioner Powell/Commissioner Cooper — approve — unanimous

Invocation

1 Chairman Richard Higgins

Pledge

2 Commissioner Billy Powell

Public Comments

There were no comments from the public.

Proclamation/s

3 Approve the Proclamation recognizing Harvey Marlow's retirement after 30 years of service to Hall County, Georgia.

Commissioner Echols/Commissioner Powell — approve — unanimous

4 Approve the Proclamation recognizing Michael Ledford's retirement after 33 years of service to Hall County, Georgia.

Commissioner Stowe presented Mr. Ledford with a Proclamation

Commissioner Stowe/Commissioner Echols — approve — unanimous

5 Approve the Proclamation recognizing November 1, 2022 as National Family Literacy Day.

Commissioner Powell presented Carolyn Launer and Penny Walker of the Colonel William Candler Chapter NSDAR with a Proclamation.

Commissioner Powell/Commissioner Stowe — approve — unanimous

6 Approve the Proclamation recognizing November 2022 as National American Indian Heritage Month.

Commissioner Powell presented Carolyn Launer and Penny Walker of the Colonel William Candler Chapter NSDAR with a Proclamation.

Commissioner Powell/Commissioner Stowe — approve — unanimous

Consent Agenda

Commissioner Stowe/Commissioner Powell — approve — unanimous

7 Approve the November 14, 2022 Work Session Minutes.

8 Approve the November 9, 2022 Voting Meeting Minutes.

9 Approve the November 9, 2022 Executive Session Minutes.

10 Approve the November 9, 2022 Meeting Minutes.

11 Approve the Letter of Intent and subsequent contract to purchase digital orthophotography as part of the 2023 GMRC Orthoimagery and LiDAR Project for Planning and Development from Georgia Mountains Regional Commission (GMRC) of Gainesville, GA, in the amount of $110,565.00.

12 Approve the purchase of Commercial & Industrial Appraisal Cost Tables to be updated for Tax Year 2023 for the Tax Assessor's Office to Georgia Mass Appraisal Solutions and Services, Inc. (GMASS, Inc) of Norwood, GA, in the amount of $50,000.00.

Public Hearing to amend Hall County's Zoning Map as follows:

Randi Doveton, Director of Planning and Development, addressed the Board.

13 Application of Scott Puckett, Inc to rezone from Agricultural Residential-III (AR-III) to Planned Residential Development (PRD) on a 115.98± acre tract located on the south side of Friendship Circle at its intersection with Friendship Place; a. k. a. 3746, 3760, & 3774 Friendship Circle & 3654 Friendship Road; Zoned AR-III; Tax Parcel 15048 000007, 000008, 000025C, & 000204. Proposed Use: 349 unit residential development. Commission District 1.

Mr. Linkous introduced the item. Ms. Doveton discussed the item. Mr. Linkous conducted the Public Hearing.

The following people addressed the Board:

Favor:

- Tyler Smith, 340 Jesse Jewell Parkway, Gainesville

Commissioner Cooper/Commissioner Stowe — approve with the twelve (12) conditions listed below — unanimous

Conditions:

1. The development shall occur as depicted on the site plan and described in the project narrative, per all conditions stated below. The Planning Director can approve any necessary changes provided:
    a. No increase in overall density greater than 3.0 units per acre;
    b. No decreased minimum lot area or width;
    c. No decrease in minimum building setbacks;
    d. No decrease in buffers.
    e. In geological or topographical constrains identified during development or engineering plans.
2. The developer shall be responsible for the cost of any improvements identified by the traffic study, and/or required by Hall County Engineer or the Georgia Department of Transportation.
3. The proposed residential development shall conform to §17.180.060 Planned Residential Development (PRD) standards. No variances are granted as part of this request, unless specifically identified during the motion.
4. The proposed residential development shall confirm to §16.60.
    a. All site plans shall indicate that the distance from the rear of the sidewalk to the garage meets or exceeds a minimum of 22 feet.
    b. Open Space: minimum of 30%.
    c. The Open Space and lot configuration shall be redesigned to meet §17.430.110.E and §17.430.110.F, including the requirement that "F. The open space shall be directly accessible to the largest practicable number of lots within the subdivision. Non-adjoining lots shall be provided with safe, convenient access to the open space." The redesigned lot layout shall be approved by the Planning Director prior to submission of the application for a Preliminary Plat/LDP application.
    d. Buffers: A minimum 50 undisturbed buffer shall be retained around the perimeter except along the rights-of-way of Friendship Circle and Friendship Rd. These shall have a 25 feet landscaped buffer which, will provide dense screening of the development. The landscape plan shall be approved by the Planning Director prior to the issuance of the LDP.
    e. Architectural standards: All facades of all residences shall be finished with brick, stone, stucco, wood siding, wood shakes, or fiber cement type siding. The front facades shall incorporate changes in building material, texture, and/or color. Vinyl siding on all residential and non-residential buildings shall be prohibited.
5. A homeowners association shall be required to maintain the common ownership elements of the development.
6. The proposed Stormwater BMP (pond) shall be a part of the open space and shall be provided a county approved maintenance access.
7. Encroachment of state waters and stream buffers shall be allowed on individual lots, however encroachment into any of the 50 to 75 foot buffered area located on individual lots shall not be allowed, including any fencing, patios, and construction improvements.
8. The following statement regarding the potential impacts of agricultural operations in the area shall be made a part of any plat recorded on the property: "Owners, occupants, and users of property shown on this plat are hereby informed of the impacts associated with normal farming practices which may take place on adjacent and nearby property including, but not

limited to, noise, odors, dust, the operation of machinery of any kind, the storage and disposal of manure, and the application of fertilizers, herbicides, and pesticides. Therefore, owners, occupants, and users of the property shown on this plat should be prepared to expect the effects of such practices."

9. All conditions of zoning shall be made part of any plats created for the property.
10. This approval shall be valid for 12 months after sewage is available to this property.
11. Along the easement entrance there shall be a 50 foot planted vegetated buffer on both sides.
12. A hog wire fence shall be installed along the left property line which joins Nancy Johnson's property.

14 Application of Phillip Edwards, Chad & Clint Shoaf to rezone from Residential-I (R-I) to Planned Commercial Development (PCD) on a 3.54± acre tract located on the north side of Mountain View Road at its intersection with Old Oakwood Road; a.k.a. 2928 Mountain View Road; Zoned R-I; Tax Parcel 08012 003006S. Proposed Use: self-storage warehouses. Commission District 4.

Mr. Linkous introduced the item. Ms. Doveton discussed the item. Mr. Linkous conducted the Public Hearing.

The following people addressed the Board:

Favor:

- Phillip Edwards, 1280 Lakewood Court, Athens
- Dillon Lee

Commissioner Stowe/Commissioner Powell — approve with the eleven (11) conditions listed below — unanimous

Conditions:

1. There shall be coordination with Georgia Power for a fence with a gate lock along the power easement.
2. The placement and design of the buffers shall be approved by the Planning Director on a revised site plan prior to submission to Development Review. All lots facing the power easement shall have heavily vegetated tall evergreens installed.
3. Before a building permit is issued, the proposed architectural plans shall receive approval from the Hall County Planning Director.
4. Driveway design and placement are subject to approval by Hall County Traffic Engineering.
5. The following uses shall be prohibited: adult entertainment establishments, junk yards, and billboard signs.
6. Georgia Power shall approve the commercial site plan prior to the Land Disturbance Permit being issued.
7. All exterior lighting shall be full cutoff down lights.
8. The development shall be in conformity with all Hall County ordinances at the time of submission for development review, including the tree protection ordinance.
9. Hours of operation shall only be between 5am to 11pm.
10. There shall be a brick and mortar sign at the front.
11. Buildings A and B facing Mountain View Road shall have a minimum of 36 inch water table with hardy plank siding.

15 Application of Ridgeline Land Planning, Inc. for a front yard setback variance subject to County Commission approval from 30 feet to 15 feet on a .61± acre tract located at the terminus of River Station Drive; a.k.a. 6595 River Station Drive; Zoned PRD; Tax Parcel 09079C000036. Proposed Use: single family dwelling. Commission District 3.

Mr. Linkous introduced the item. Ms. Doveton discussed the item. Mr. Linkous conducted the Public Hearing.

The following people addressed the Board:

Favor:

- Holt Persinger, 196 Belaire Court, Winder

Commissioner Echols/Commissioner Stowe — approve with the two (2) conditions listed below — unanimous

Conditions:

1. The Board grants a variance for lot 36 of Magnolia Station Phase 2 to vary the front yard setback from 30 feet to 15 feet in a Planned Residential Development.
2. In accordance with the PRD ordinance section 17.180.060.B.10: Footing inspections. At the time of footing inspection, the contractor shall provide the county building official with a certificate from a licensed surveyor certifying building setbacks for all corners of the structure being inspected.

16 Application of Ridgeline Land Planning, Inc. for a front yard setback variance subject to County Commission approval from 30 feet to 15 feet on a .51± acre tract located at the terminus of River Station Drive; a.k.a. 6599 River Station Drive; Zoned PRD; Tax Parcel 09079C000035. Proposed Use: single family dwelling. Commission District 3.

Mr. Linkous introduced the item. Ms. Doveton discussed the item. Mr. Linkous conducted the Public Hearing.

The following people addressed the Board:

Favor:

- Holt Persinger, 196 Belaire Court, Winder

Commissioner Echols/Commissioner Stowe — approve with the two (2) conditions listed below — unanimous

Conditions:

1. The Board grants a variance for lot 35 of Magnolia Station Phase 2 to vary the front yard setback from 30 feet to 15 feet in a Planned Residential Development.
2. In accordance with the PRD ordinance section 17.180.060.B.10: Footing inspections. At the time of footing inspection, the contractor shall provide the county building official with a certificate from a licensed surveyor certifying building setbacks for all corners of the structure being inspected.

17 Application of Atlas Development Services, Inc. to rezone from Agricultural Residential-IV (AR-IV) to Planned Residential Development (PRD) on a 19.21± acre tract located at the intersection of Old Winder Highway and Union Church Road; a.k.a. 5540, 5548, 5556, 5564, 5572, & 5580 Old Winder Highway & 5925, 5919, 5911, & 5901 Union Church Road; Zoned AR-IV; Tax Parcel 15039A000018 — 000023 & 000025 — 000028. Proposed Use: 135 unit single-family townhomes. Commission District 1.

Commissioner Cooper recused herself.

Mr. Linkous introduced the item. Ms. Doveton discussed the item. Mr. Linkous conducted the Public Hearing.

The following people addressed the Board:

Favor:

- Steve Gilliam, 340 Jesse Jewell, Suite 300, Gainesville
- Cameron Henderson, 14 West Main Street, Suite C, Buford

Commissioner Powell/Commissioner Stowe — approve with the twenty-four (24) conditions listed below — Vote 4 to 0

Commissioner Cooper — recused

Commissioner Powell — aye

Chairman Higgins — aye

Commissioner Echols — aye

Commissioner Stowe — aye

Motion passed.

Conditions:

1. All streets shall be built to Hall County Public Streets standards as indicated on the site plan presented at the meeting. No Variances to Public Street design standards in Articles 16, Subdivisions, and the parking requirements in Article 17. No on street parking shall be allowed.
2. Front setbacks for each townhome unit shall be a minimum of 22 feet from back of sidewalk; 0 feet side internal setback; minimum 10 foot building separation (unless greater spacing is required by the Building or Fire code); and 20 foot rear setbacks on internal lots. The setbacks for each building shall be determined and approved on the Preliminary Plat.
3. There shall only be no more than 61 units of 20 foot lots within the approval of 135 units.
4. Development standards shall meet or exceed the following:
    a. Site area - 19.2 Acres
    b. Recorded plat-units - 135
    c. Proposed density - 7.03 UPA
    d. Water and sewer - Gainesville City Water and Hall County Sewer
    e. Required open space to meet requirements of sections §17.430.100 through §17.430.150 - 30%
    f. Sidewalks-both side of road-internal Only - 5 ft.

g. Streets - Public
h. Minimum lot width lot width at building line - 20 ft.
i. Minimum lot depth - 80 FT.
j. Minimum lot size - 1,600 SF
k. Front setback (from back of sidewalk-all proposed units are front load garages, not rear load) - 22 FT.
l. Internal side setback - 0 FT.
m. Maximum building height - 35 FT.
n. Side separation-roof overhang to roof overhang - 10 FT.
o. Garage % of front facade - 70%
p. Minimum heated floor area - 1,400 SQ. FT.
q. Exterior buffer - 50 FT.

5. The development shall meet all required Fire Codes (IFC) including, but not limited to the follow:
   a. IFC Section D107, Developments of one or two family dwellings where the number of dwelling units exceeds 120 shall be provided with two separate and approved fire apparatus access roads. Note: exceptions to this code are found in IFC Appendix D 107.1
   b. IFC Section 507: All buildings must be with in the 400' hose lay distance requirements from a fire hydrant as the truck travels.
   c. A Complete set of engineered civil plans will have to submit for review and approval by the Hall County Fire Marshal's Office.
6. All parking indicated shall be Off Street parking in accordance with section 17.180.060.B.11.d: Parking shall conform to requirements specified in chapter 17.250, in addition to any parking and loading requirements or accessibility guidelines pertaining to the Americans with Disabilities Act. On-street parking is prohibited in all planned residential developments. Off-street parking areas that make it necessary for vehicles to back out directly into a public road, street, or highway are prohibited in all planned residential developments
7. No vinyl fencing shall be permitted on the site, except around stormwater facilities if requested by the Public Works Department.
8. The sanitary sewer connection point shall be identified prior to submission of the LDP. The LDP/ Preliminary Plat submission shall include a full design for any sewer line extensions.
9. Any easements across private property or permits needed to place sewer lines in a ROW shall be obtained prior to submission of the LDP/Preliminary Plat.
10. The recommendations of the traffic study (dated September 9, 2022 by Southeastern Engineering, Inc.), subject to the review and approval of both Hall County Traffic Engineering and the Georgia Department of Transportation shall be implemented. Any cost associated with these improvements shall be the responsibility of the developer.
11. Two Model Home Building Permits will be permitted.
12. The proposed development must provide curbing, gutters, and minimum 5-foot-wide sidewalks along the full length of the subject property against Old Winder Highway, if determined to be feasible by the Hall County Planning Director and Hall County Public Works Director.
13. No land disturbance permit shall be issued until the new combination plat is formally recorded with Hall County Clerk of Court.
14. Per §17.180.060.B.8, the development shall conform to all open space requirements of sections §17.430.100 through §17.430.150. Prior to submission of the LDP/ Preliminary Plat for review, a revised Open Space plan shall be submitted for review and approval by the

Planning Director. This may include modification of street and lot layouts to comply with the Open Space design standards.

15. All conditions of zoning shall be made part of any plats created for the property.
16. Architectural standards: All facades of all residences shall be finished with masonry (brick or stone), wood, or fiber cement / Hardi-plank type siding. The front facades shall be 100% masonry as depicted on the architectural elevations submitted with the application package.
17. Garage doors shall not exceed 70% of front facade.
18. Driveways shall be at least 22 feet in length, as measured from behind the edge of the sidewalk to the garage and all driveways shall be the width of the 2 (two) car garage product.
19. A minimum 50-foot planted buffer shall be established along the perimeter of the property adjacent to residential and/or non-residential zoning districts to ensure that the planned development is appropriately screened. The planted buffers shall conform to the requirements described in section 17.260.020 titled Vegetation Buffers and Vision Clearance. This shall cover the road frontage along Union Church Road.
20. Except for approved road connections, a 5' Non-Access Easement shall be indicated on the plat for access to Old Winder Highway and Union Church Road.
21. A property maintenance association is required to maintain common ownership elements of the development. Draft HOA documents shall be submitted with the LDP/Preliminary Plat submission for review to ensure compliance with the conditions of zoning and review for any inconsistencies with County ordinances. This is required by §16.30.120 Contents of preliminary plat application.
22. The amenity package shall be completed before the building permits are granted for the fifth building.
23. There shall only be up to one construction trailer issued on site after LDP.
24. Referencing condition 22, the development can remove the swimming pool as an amenity.

County Administrator

Mr. Connell addressed the Board. He stated that Hall County Offices would be closed on Thursday, November 24, and Friday, November 25, in observance of the Thanksgiving Holiday.

Commission Time

The Commissioners did not have any items to report.

Adjourn

Commissioner Powell/Commissioner Stowe — adjourn at 7:03 p.m. — unanimous

HALL COUNTY BOARD OF COMMISSIONERS
MEETING MINUTES

Hall County Government Center 2nd Floor
2875 Browns Bridge Road
Gainesville, GA 30504
Streamed Live on Hall County Government's Website - www.hallcounty.org
Thursday, November 17, 2022 - 06:00 PM

Call to Order

Chairman Higgins at 6:01 p.m.

Present:

Chairman Richard Higgins, Vice-Chairman Kathy Cooper and Commissioners Billy Powell, Shelly Echols, and Jeff Stowe

Also present were County Administrator Jock Connell, Assistant County Administrator Zach Propes, Deputy Commission Clerk Abril Olivas, County Attorney Van Stephens, and Deputy County Attorney William Linkous III

Approve Agenda

Commissioner Powell/Commissioner Cooper — approve — unanimous

Invocation

1 Chairman Richard Higgins

Pledge

2 Commissioner Billy Powell

Public Comments

There were no comments from the public.

Proclamation/s

3 Approve the Proclamation recognizing Harvey Marlow's retirement after 30 years of service to Hall County, Georgia.

Commissioner Echols/Commissioner Powell — approve — unanimous

4 Approve the Proclamation recognizing Michael Ledford's retirement after 33 years of service to Hall County, Georgia.

Commissioner Stowe presented Mr. Ledford with a Proclamation

Commissioner Stowe/Commissioner Echols — approve — unanimous

5 Approve the Proclamation recognizing November 1, 2022 as National Family Literacy Day.

Commissioner Powell presented Carolyn Launer and Penny Walker of the Colonel William Candler Chapter NSDAR with a Proclamation.

Commissioner Powell/Commissioner Stowe — approve — unanimous

6 Approve the Proclamation recognizing November 2022 as National American Indian Heritage Month.

Commissioner Powell presented Carolyn Launer and Penny Walker of the Colonel William Candler Chapter NSDAR with a Proclamation.

Commissioner Powell/Commissioner Stowe — approve — unanimous

Consent Agenda

Commissioner Stowe/Commissioner Powell — approve — unanimous

7 Approve the November 14, 2022 Work Session Minutes.

8 Approve the November 9, 2022 Voting Meeting Minutes.

9 Approve the November 9, 2022 Executive Session Minutes.

10 Approve the November 9, 2022 Meeting Minutes.

11 Approve the Letter of Intent and subsequent contract to purchase digital orthophotography as part of the 2023 GMRC Orthoimagery and LiDAR Project for Planning and Development from Georgia Mountains Regional Commission (GMRC) of Gainesville, GA, in the amount of $110,565.00.

12 Approve the purchase of Commercial & Industrial Appraisal Cost Tables to be updated for Tax Year 2023 for the Tax Assessor's Office to Georgia Mass Appraisal Solutions and Services, Inc. (GMASS, Inc) of Norwood, GA, in the amount of $50,000.00.

Public Hearing to amend Hall County's Zoning Map as follows:

Randi Doveton, Director of Planning and Development, addressed the Board.

13 Application of Scott Puckett, Inc to rezone from Agricultural Residential-III (AR-III) to Planned Residential Development (PRD) on a 115.98± acre tract located on the south side of Friendship Circle at its intersection with Friendship Place; a. k. a. 3746, 3760, & 3774 Friendship Circle & 3654 Friendship Road; Zoned AR-III; Tax Parcel 15048 000007, 000008, 000025C, & 000204. Proposed Use: 349 unit residential development. Commission District 1.

Mr. Linkous introduced the item. Ms. Doveton discussed the item. Mr. Linkous conducted the Public Hearing.

The following people addressed the Board:

Favor:

- *Tyler Smith, 340 Jesse Jewell Parkway, Gainesville*

Commissioner Cooper/Commissioner Stowe — approve with the twelve (12) conditions listed below — unanimous

Conditions:

1. The development shall occur as depicted on the site plan and described in the project narrative, per all conditions stated below. The Planning Director can approve any necessary changes provided:

a. No increase in overall density greater than 3.0 units per acre;

b. No decreased minimum lot area or width;

c. No decrease in minimum building setbacks;

d. No decrease in buffers.

e. In geological or topographical constrains identified during development or engineering plans.

2. The developer shall be responsible for the cost of any improvements identified by the traffic study, and/or required by Hall County Engineer or the Georgia Department of Transportation.

3. The proposed residential development shall conform to §17.180.060 Planned Residential Development (PRD) standards. No variances are granted as part of this request, unless specifically identified during the motion.

4. The proposed residential development shall confirm to §16.60.

a. *All site plans shall indicate that the distance from the rear of the sidewalk to the garage meets or exceeds a minimum of 22 feet.*
b. *Open Space: minimum of 30%.*
c. *The Open Space and lot configuration shall be redesigned to meet §17.430.110.E and §17.430.110.F, including the requirement that "F. The open space shall be directly accessible to the largest practicable number of lots within the subdivision. Non-adjoining lots shall be provided with safe, convenient access to the open space." The redesigned lot layout shall be approved by the Planning Director prior to submission of the application for a Preliminary Plat/LDP application.*
d. *Buffers: A minimum 50 undisturbed buffer shall be retained around the perimeter except along the rights-of-way of Friendship Circle and Friendship Rd. These shall have a 25 feet landscaped buffer which, will provide dense screening of the development. The landscape plan shall be approved by the Planning Director prior to the issuance of the LDP.*
e. *Architectural standards: All facades of all residences shall be finished*

with brick, stone, stucco, wood siding, wood shakes, or fiber cement type siding. The front facades shall incorporate changes in building material, texture, and/or color. Vinyl siding on all residential and non-residential buildings shall be prohibited.

5. A homeowners association shall be required to maintain the common ownership elements of the development.

6. The proposed Stormwater BMP (pond) shall be a part of the open space and shall be provided a county approved maintenance access.

7. Encroachment of state waters and stream buffers shall be allowed on individual lots, however encroachment into any of the 50 to 75 foot buffered area located on individual lots shall not be allowed, including any fencing, patios, and construction improvements.

8. The following statement regarding the potential impacts of agricultural operations in the area shall be made a part of any plat recorded on the property: "Owners, occupants, and users of property shown on this plat are hereby informed of the impacts associated with normal farming practices which may take place on adjacent and nearby property including, but not limited to, noise, odors, dust, the operation of machinery of any kind, the storage and disposal of manure, and the application of fertilizers, herbicides, and pesticides. Therefore, owners, occupants, and users of the property shown on this plat should be prepared to expect the effects of such practices."

9. All conditions of zoning shall be made part of any plats created for the property.

10. This approval shall be valid for 12 months after sewage is available to this property.

11. Along the easement entrance there shall be a 50 foot planted vegetated buffer on both sides.

12. A hog wire fence shall be installed along the left property line which joins Nancy Johnson's property.

14 Application of Phillip Edwards, Chad & Clint Shoaf to rezone from Residential-I (R-I) to Planned Commercial Development (PCD) on a 3.54± acre tract located on the north side of Mountain View Road at its intersection with Old Oakwood Road; a.k.a. 2928 Mountain View Road; Zoned R-I; Tax Parcel 08012 003006S. Proposed Use: self-storage warehouses. Commission District 4.

Mr. Linkous introduced the item. Ms. Doveton discussed the item. Mr. Linkous conducted the Public Hearing.

The following people addressed the Board:

Favor:

- *Phillip Edwards, 1280 Lakewood Court, Athens*
- *Dillon Lee*

Commissioner Stowe/Commissioner Powell — approve with the eleven (11) conditions listed below — unanimous

Conditions:

1. There shall be coordination with Georgia Power for a fence with a gate lock along the power easement.

2. The placement and design of the buffers shall be approved by the Planning Director on a revised site plan prior to submission to Development Review. All lots facing the power easement shall have heavily vegetated tall evergreens installed.

3. Before a building permit is issued, the proposed architectural plans shall receive approval from the Hall County Planning Director.

4. Driveway design and placement are subject to approval by Hall County Traffic Engineering.

5. The following uses shall be prohibited: adult entertainment establishments, junk yards, and billboard signs.

6. Georgia Power shall approve the commercial site plan prior to the Land Disturbance Permit being issued.

7. All exterior lighting shall be full cutoff down lights.

8. The development shall be in conformity with all Hall County ordinances at the time of submission for development review, including the tree protection ordinance.

9. Hours of operation shall only be between 5am to 11pm.

10. There shall be a brick and mortar sign at the front.

11. Buildings A and B facing Mountain View Road shall have a minimum of 36 inch water table with hardy plank siding.

15 Application of Ridgeline Land Planning, Inc. for a front yard setback variance subject to County Commission approval from 30 feet to 15 feet on a .61± acre tract located at the terminus of River Station Drive; a.k.a. 6595 River Station Drive; Zoned PRD; Tax Parcel 09079C000036. Proposed Use: single family dwelling. Commission District 3.

Mr. Linkous introduced the item. Ms. Doveton discussed the item. Mr. Linkous conducted the Public Hearing.

The following people addressed the Board:

Favor:

- *Holt Persinger, 196 Belaire Court, Winder*

Commissioner Echols/Commissioner Stowe — approve with the two (2) conditions listed below — unanimous

Conditions:

1. The Board grants a variance for lot 36 of Magnolia Station Phase 2 to vary the front yard setback from 30 feet to 15 feet in a Planned Residential Development.

2. In accordance with the PRD ordinance section 17.180.060.B.10: Footing inspections. At the time of footing inspection, the contractor shall provide the county building official with a certificate from a licensed surveyor certifying building setbacks for all corners of the structure being inspected.

16 Application of Ridgeline Land Planning, Inc. for a front yard setback variance subject to County Commission approval from 30 feet to 15 feet on a .51± acre tract located at the terminus of River Station Drive; a.k.a. 6599 River Station Drive; Zoned PRD; Tax Parcel 09079C000035. Proposed Use: single family dwelling. Commission District 3.

Mr. Linkous introduced the item. Ms. Doveton discussed the item. Mr. Linkous conducted the Public Hearing.

The following people addressed the Board:

Favor:

- *Holt Persinger, 196 Belaire Court, Winder*

Commissioner Echols/Commissioner Stowe — approve with the two (2) conditions listed below — unanimous

Conditions:

1. The Board grants a variance for lot 35 of Magnolia Station Phase 2 to vary the front yard setback from 30 feet to 15 feet in a Planned Residential Development.

2. In accordance with the PRD ordinance section 17.180.060.B.10: Footing inspections. At the time of footing inspection, the contractor shall provide the county building official with a certificate from a licensed surveyor certifying building setbacks for all corners of the structure being inspected.

17 Application of Atlas Development Services, Inc. to rezone from Agricultural Residential-IV (AR-IV) to Planned Residential Development (PRD) on a 19.21± acre tract located at the intersection of Old Winder Highway and Union Church Road; a.k.a. 5540, 5548, 5556, 5564, 5572, & 5580 Old Winder Highway & 5925, 5919, 5911, & 5901 Union Church Road; Zoned AR-IV; Tax Parcel 15039A000018 — 000023 & 000025 — 000028. Proposed Use: 135 unit single-family townhomes. Commission District 1.

Commissioner Cooper recused herself.

Mr. Linkous introduced the item. Ms. Doveton discussed the item. Mr. Linkous conducted the Public Hearing.

The following people addressed the Board:

Favor:

- *Steve Gilliam, 340 Jesse Jewell, Suite 300, Gainesville*
- *Cameron Henderson, 14 West Main Street, Suite C, Buford*

Commissioner Powell/Commissioner Stowe — approve with the twenty-four (24) conditions listed below — Vote 4 to 0

Commissioner Cooper — recused

Commissioner Powell — aye

Chairman Higgins — aye

Commissioner Echols — aye

Commissioner Stowe — aye

Motion passed.

Conditions:

1. All streets shall be built to Hall County Public Streets standards as indicated on the site plan presented at the meeting. No Variances to Public Street design standards in Articles 16, Subdivisions, and the parking requirements in Article 17. No on street parking shall be allowed.

2. Front setbacks for each townhome unit shall be a minimum of 22 feet from back of sidewalk; 0 feet side internal setback; minimum 10 foot building separation (unless greater spacing is required by the Building or Fire code); and 20 foot rear setbacks on internal lots. The setbacks for each building shall be determined and approved on the Preliminary Plat.

3. There shall only be no more than 61 units of 24 foot lots within the approval of 135 units.

4. Development standards shall meet or exceed the following:

a. Site area - 19.2 Acres

b. Recorded plat-units - 135

c. Proposed density - 7.03 UPA

d. Water and sewer - Gainesville City Water and Hall County Sewer

e. Required open space to meet requirements of sections §17.430.100 through §17.430.150 - 30%

f. Sidewalks-both side of road-internal Only - 5 ft.

g. Streets - Public

h. Minimum lot width lot width at building line - 20 ft.

i. Minimum lot depth - 80 FT.

j. Minimum lot size - 1,600 SF

k. Front setback (from back of sidewalk-all proposed units are front load garages, not rear load) - 22 FT.

l. Internal side setback - 0 FT.

m. Maximum building height - 35 FT.

n. Side separation-roof overhang to roof overhang - 10 FT.

o. Garage % of front facade - 70%

p. Minimum heated floor area - 1,400 SQ. FT.

q. Exterior buffer - 50 FT.

5. The development shall meet all required Fire Codes (IFC) including, but not limited to the follow:

a. *IFC Section D107, Developments of one or two family dwellings where the number of dwelling units exceeds 120 shall be provided with two separate and approved fire apparatus access roads. Note: exceptions to this code are found in IFC Appendix D 107.1*
b. *IFC Section 507: All buildings must be with in the 400' hose lay distance requirements from a fire hydrant as the truck travels.*
c. *A Complete set of engineered civil plans will have to submit for review and approval by the Hall County Fire Marshal's Office.*

6. All parking indicated shall be Off Street parking in accordance with section 17.180.060.B.11.d: Parking shall conform to requirements specified in chapter 17.250, in addition to any parking and loading requirements or accessibility guidelines pertaining to the Americans with Disabilities Act. On-street parking is prohibited in all planned residential developments. Off-street parking areas that make it necessary for vehicles to back out directly into a public road, street, or highway are prohibited in all planned residential developments

7. No vinyl fencing shall be permitted on the site, except around stormwater facilities if requested by the Public Works Department.

8. The sanitary sewer connection point shall be identified prior to submission of the LDP. The LDP/ Preliminary Plat submission shall include a full design for any sewer line extensions.

9. Any easements across private property or permits needed to place sewer lines in a ROW shall be obtained prior to submission of the LDP/ Preliminary Plat.

10. The recommendations of the traffic study (dated September 9, 2022 by Southeastern Engineering, Inc.), subject to the review and approval of both Hall County Traffic Engineering and the Georgia Department of Transportation shall be implemented. Any cost associated with these improvements shall be the responsibility of the developer.

11. Two Model Home Building Permits will be permitted.

12. The proposed development must provide curbing, gutters, and minimum 5-foot-wide sidewalks along the full length of the subject property against Old Winder Highway, if determined to be feasible by the Hall County Planning Director and Hall County Public Works Director.

13. No land disturbance permit shall be issued until the new combination plat is formally recorded with Hall County Clerk of Court.

14. Per §17.180.060.B.8, the development shall conform to all open space requirements of sections §17.430.100 through §17.430.150. Prior to submission of the LDP/ Preliminary Plat for review, a revised Open Space plan shall be submitted for review and approval by the Planning Director. This may include modification of street and lot layouts to comply with the Open Space design standards.

15. All conditions of zoning shall be made part of any plats created for the property.

16. Architectural standards: All facades of all residences shall be finished with masonry (brick or stone), wood, or fiber cement / Hardi-plank type siding. The front facades shall be 100% masonry as depicted on the architectural elevations submitted with the application package.

17. Garage doors shall not exceed 70% of front facade.

18. Driveways shall be at least 22 feet in length, as measured from behind the edge of the sidewalk to the garage and all driveways shall be the width of the 2 (two) car garage product.

19. A minimum 50-foot planted buffer shall be established along the perimeter of the property adjacent to residential and/or non-residential zoning districts to ensure that the planned development is appropriately screened. The planted buffers shall conform to the requirements described in section 17.260.020 titled Vegetation Buffers and Vision Clearance. This shall cover the road frontage along Union Church Road.

20. Except for approved road connections, a 5' Non-Access Easement shall be indicated on the plat for access to Old Winder Highway and Union Church Road.

21. A property maintenance association is required to maintain common

ownership elements of the development. Draft HOA documents shall be submitted with the LDP/Preliminary Plat submission for review to ensure compliance with the conditions of zoning and review for any inconsistencies with County ordinances. This is required by §16.30.120 Contents of preliminary plat application.

22. The amenity package shall be completed before the building permits are granted for the fifth building.

23. There shall only be up to one construction trailer issued on site after LDP.

24. Referencing condition 22, the development can remove the swimming pool from the amenity package.

County Administrator

Mr. Connell addressed the Board. He stated that Hall County Offices would be closed on Thursday, November 24, and Friday, November 25, in observance of the Thanksgiving Holiday.

Commission Time

The Commissioners did not have any items to report.

Adjourn

Commissioner Powell/Commissioner Stowe — adjourn at 7:03 p.m. — unanimous

AGENDA ITEM

Consent Agenda

REPORT TO: **Work Session (07/10/23)**

REPORT TO: **Voting Meeting (07/13/23)**

ITEM NO: 378/2023

SUBJECT: Approval and authorization for the Chairman to execute a resolution consenting to the de-annexation of 4042 Brock Drive, Oakwood, GA, pursuant to O.C.G.A. § 36-36-22, and authorize the Chairman to execute the resolution and any and all documents necessary to consent to the de-annexation, subject to the review and approval by the County Attorney.

Meetings:

Work Session Date: 07/10/23

Voting Meeting Date: 07/13/23

Executive Summary:

Presenter: WJLI

Recommendation:
Approval.

Purpose of Request:
To approve the Resolution consenting to the deannexation of a 0.43 acre tract of land located at 4042 Brock Drive, Oakwood, Georgia 30566 from the City of Oakwood pursuant to O.C.G.A. Section 36-36-22, and authorize the Chairman to execute the Resolution and any and all documents necessary to consent to the deannexation, subject to the review and approval by the County Attorney.

History:

Hall County received a copy of the deannexation application on June 18, 2023.

Facts and Issues:
The City of Oakwood plans to consider the deannexation application on July 13, 2023 at its Planning Commission meeting and at a Public Hearing to be scheduled by the Oakwood City Council on Monday, August 14, 2023. The property is currently zoned A-1 (Agricultural) by the City of Oakwood.

Options:

Approve or deny the Resolution.

Funding Requested $ 0.00

Are funds within current budget? No

Source of Funds

Does the action involve a Resolution, Ordinance, Contract, Agreement, etc.?	Yes
Has it been reviewed by the County Attorney?	Yes
Is there a deadline for this item?	2023-07-13

Approvals:

Submit	Budget	Finance	Attorney
WLI	TS	WG	VS
Administration		**Clerk**	
CR		JR	

Attachments:

Amezcua De-annexation Resolution and Maps
Amezcua De-annexation Application and Maps

HALL COUNTY BOARD OF COMMISSIONERS
FINANCIAL SUPPLEMENT REPORT

AGENDA ITEM 378/2023

Funds Requested: $ 0.00

Request Budgeted: No

Proposed Source of Funding:

Budget Transfer Requested: No

Funding Source Items:

Budget Transfer Items:

Additional Information/Comments:

Contact for Questions: WJLICA

Phone: (770) 297-2686

STATE OF GEORGIA

COUNTY OF HALL

RESOLUTION CONSENTING TO DE-ANNEXATION

WHEREAS, the Official Code of Georgia Annotated § 36-36-22 provides for a procedure whereby property within the incorporated limits of a city can be de-annexed into the unincorporated county; and

WHEREAS, Armando Madrigal Amezcua (the "Owner") is the sole landowner of a certain piece of property consisting of 0.43 +/- acres of land, more or less, currently located within the incorporated city limits of the City of Oakwood and having the address of 4042 Brock Drive, Oakwood, Georgia 30566 (the "Property"); and

WHEREAS, the Property is more fully identified as Tax Parcel number 08053 003011, and is described more particularly in the maps and aerial photographs contained in documents attached hereto as Exhibit "A"; and

WHEREAS, on or about June 18, 2023, Hall County received a package of documentation from Oakwood Community Development Director Dan Schultz, including a written and signed de-annexation application from the Owner, submitted to the City of Oakwood containing a complete description of the Property; and

WHEREAS, the City of Oakwood, Georgia has provided notice to the County that it has received the same de-annexation application from the Owner of the Property; and

WHEREAS, O.C.G.A. § 36-36-22 grants the City of Oakwood the authority to de-annex the Property upon the written and signed applications of all of the owners of all of the land proposed to be annexed, other than the owners of public streets, roads, highways, or right of ways,

containing a complete description of the lands to be de-annexed and the adoption of a resolution by the governing authority of Hall County, Georgia consenting to the de-annexation; and

WHEREAS, the Hall County Board of Commissioners has been granted the authority pursuant to O.C.G.A. § 36-36-22 to consent to the de-annexation of the property; and

WHEREAS, the Hall County Board of Commissioners has determined that it is in the best interests of the County and its citizens to consent to the de-annexation of the Property.

NOW THEREFORE, the Hall County Board of Commissioners hereby resolves to consent to the request of the Owner of the Property known as 4042 Brock Drive, Oakwood, Georgia, 30566, Tax Parcel number 08053 003011 (and more fully described in the attached Exhibit "A" hereto), pursuant to O.C.G.A. § 36-36-22.

SO RESOLVED this the _____ day of _____, 2023.

HALL COUNTY BOARD OF COMMISSIONERS

_____

Chairman, Richard Higgins

ATTEST:

_____ (SEAL)
Jennifer Rivera, County Clerk

APPROVED AS TO FORM:

_____
William J. Linkous III, County Attorney

Exhibit “A”

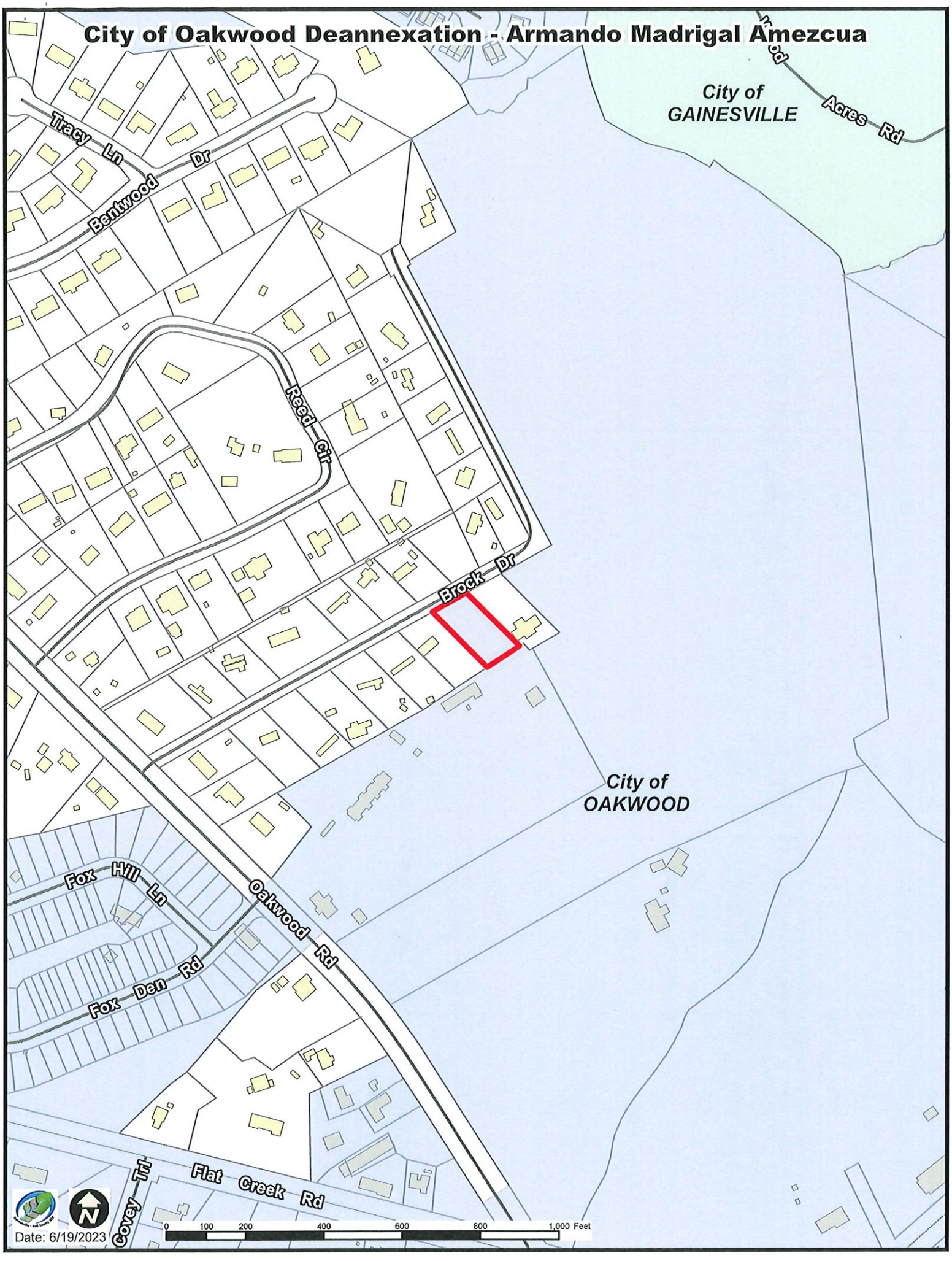
City of Oakwood Deannexation - Armando Madrigal Amezcua
City of GAINESVILLE
Acres Rd
Tracy Ln
Dr
Bentwood
Reed Cir
Brock Dr
City of OAKWOOD
Fox Hill Ln
Oakwood Rd
Fox Den Rd
Flat Creek Rd
Covey Trl
0 100 200 400 600 800 1,000 Feet
Date: 6/19/2023

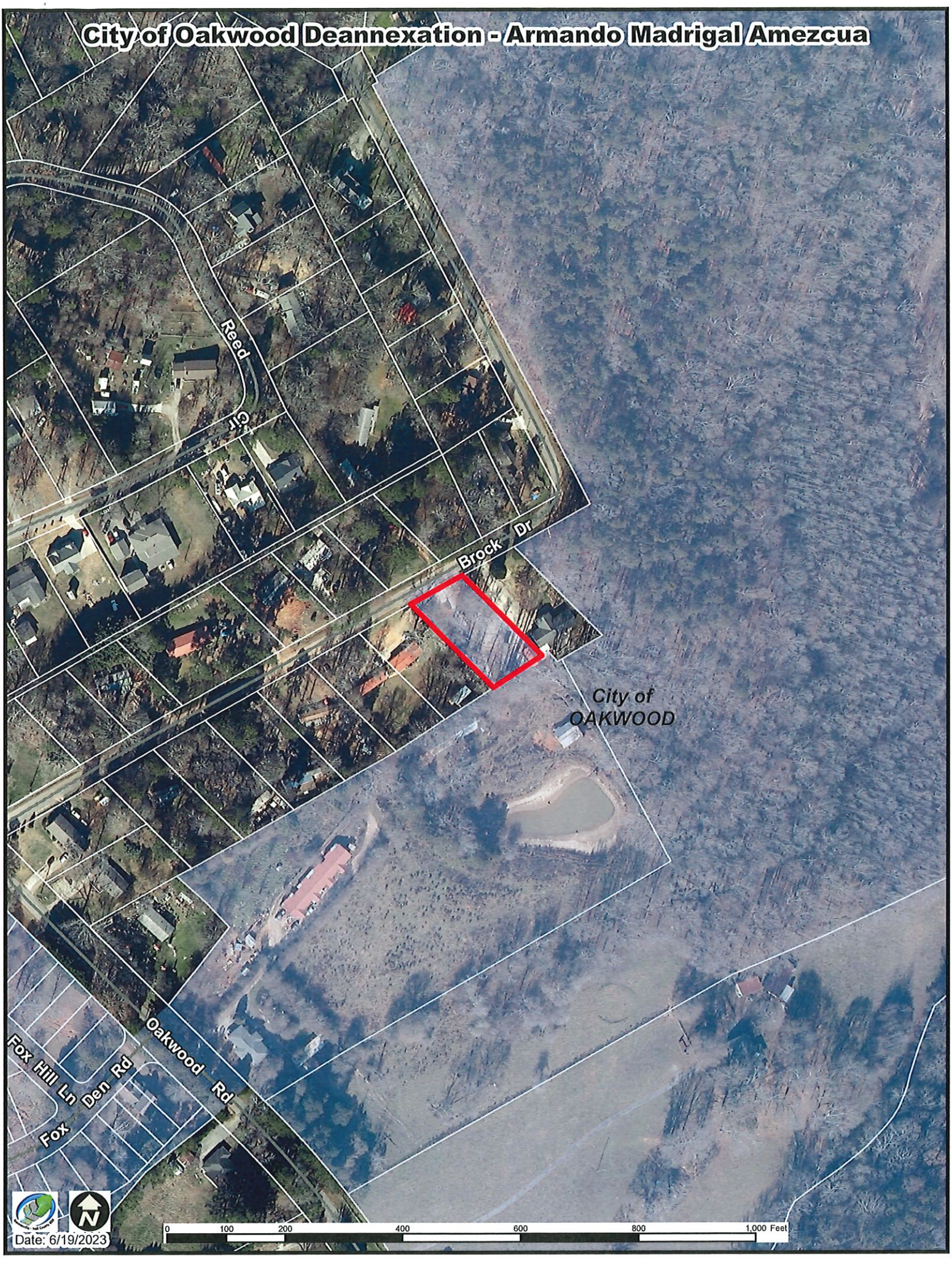
City of Oakwood Deannexation - Armando Madrigal Amezcua
Reed St
Brock Dr
City of
OAKWOOD
Oakwood Rd
Fox Hill Ln
Den Rd
Fox
0 100 200 400 600 800 1,000 Feet
Date: 6/19/2023

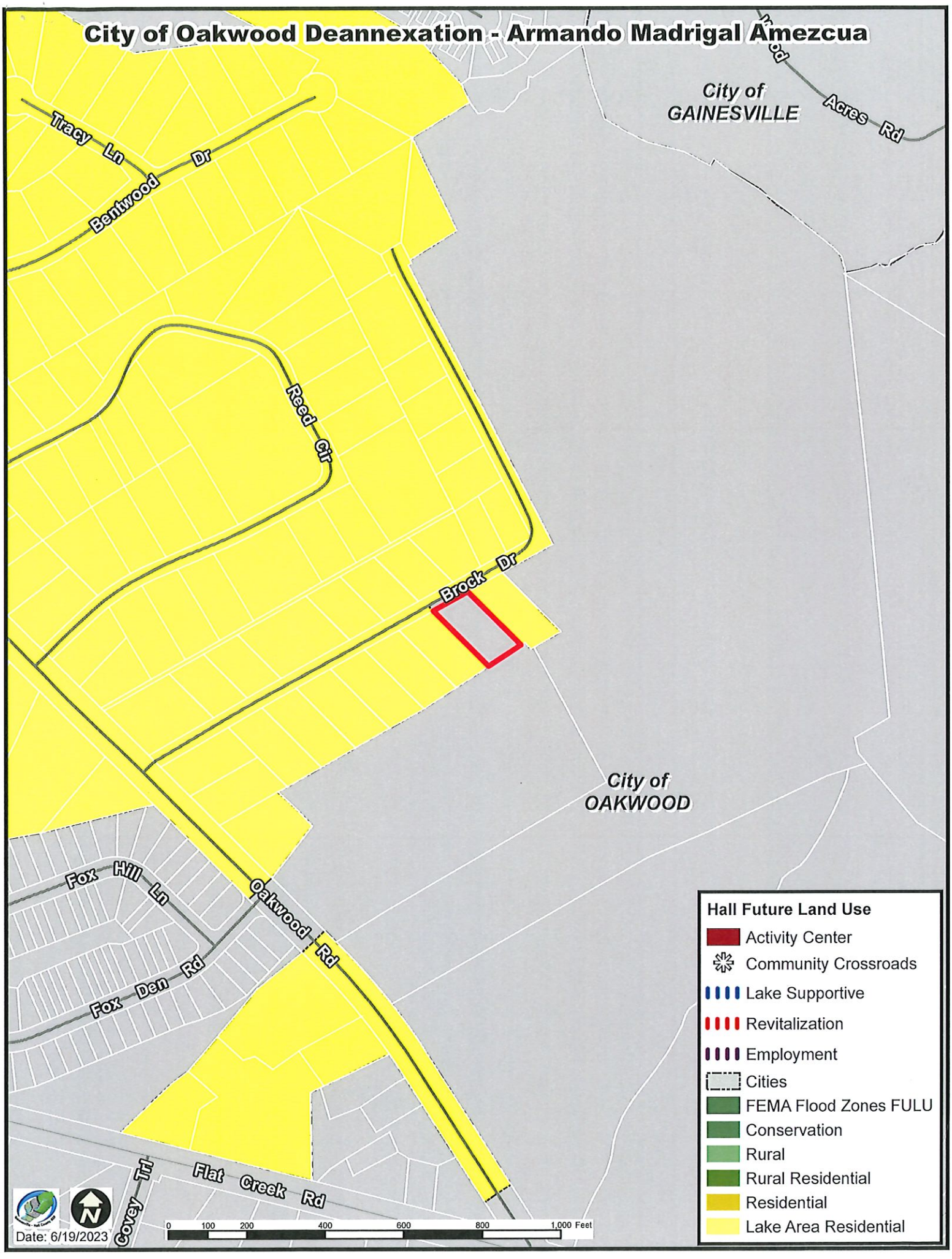
City of Oakwood Deannexation - Armando Madrigal Amezcua
City of GAINESVILLE
Acres Rd
Tracy Ln
Bentwood Dr
Reed Cir
Brock Dr
City of OAKWOOD
Fox Hill Ln
Oakwood Rd
Fox Den Rd
Flat Creek Rd
Covey Trl
Hall Future Land Use
Activity Center
Community Crossroads
Lake Supportive
Revitalization
Employment
Cities
FEMA Flood Zones FULU
Conservation
Rural
Rural Residential
Residential
Lake Area Residential
0 100 200 400 600 800 1,000 Feet
Date: 6/19/2023

CITY OF
OAKWOOD
BUILDING THE FUTURE TOGETHER
PO Box 99
Oakwood, GA 30566

ATLANTA METRO 301
14 JUN 2023 PM 4 L

Honorable Billy Powell
Hall County Board of Commissioners; District two
P.O. Drawer 1435
Gainesville, GA 30503

RECEIVED
JUN 18 2023
BY: .....

SCANNED

30503-143535

CITY OF OAKWOOD

BUILDING THE FUTURE TOGETHER

RECEIVED
JUN 1 8 2023
BY: .....

SCANNED

June 8, 2023

H. Lamar Scroggs
Mayor

Stephen Hendrix
Council Member

Pat Jones
Council Member

Todd Wilson
Council Member

Dwight Wood
Council Member

Sheri Clark Millwood
Council Member

Donald T. Hunt
City Attorney

Mai Chang
City Clerk

B.R. White
City Manager

Honorable Billy Powell
Hall County Commissioner, District 2
P. O. Drawer 1435
Gainesville, GA 30503

Re: Application for De-Annexation
Armando Madrigal Amezcua
Tax Parcel # 08053 003011 +/- 0.43 acres
Address: 4042 Brock Dr.

Dear Commissioner Powell:

Please accept this letter as a courtesy notification of the attached proposed de-annexation located in your district.

This application will be considered by the Oakwood Planning Commission on Thursday, July 13, 2023, at 6:00 p.m. and a Public Hearing will be scheduled by the Oakwood City Council on Monday, August 14, at 7:00 p.m. at Oakwood City Hall.

If you have any questions or need additional information, please give me a call.

Sincerely,

Dan Schultz
Community Development Director

Enclosures 1. GIS Map
2. De-Annexation Application

Post Office Box 99
4035 Walnut Circle
Oakwood, GA 30566
P. 770-534-2365
F. 770-297-3223

CityofOakwood.net

CITY OF OAKWOOD

BUILDING THE FUTURE TOGETHER

4035 WALNUT CIRCLE / P.O. BOX 99
OAKWOOD GA 30566
770-534-2365

GENERAL APPLICATION FORM

TYPE OF APPLICANT:

- [x] PROPERTY OWNER
- [ ] DEVELOPER/BUILDER
- [ ] RESIDENT/PROPRIETOR
- [ ] ATTORNEY/AGENT

NAME: Armando Madrigal Amezcua			
ADDRESS: 4042 Brock Dr.			
CITY: Oakwood	STATE: GA.	ZIP CODE: 30566	
PHONE:	CELL: 6786302506	FAX:	E-MAIL: Amezcua1103@gmail.com

PERSON TO CONTACT

NAME: Armando M. Amezcua		
ADDRESS: 3831 Blackstock Rd. Talmo, GA. 30575		
PHONE: 6786302506	FAX:	E-MAIL: Amezcua1103@gmail.com

PROPERTY OWNER

NAME: Armando M. Amezcua & Areli Segura		
ADDRESS: 3831 Blackstock Rd		
CITY: Talmo	STATE: GA	ZIP CODE: 30575
PHONE: 6786302506	FAX:	E-MAIL:

DESCRIPTION OF PROPERTY

ADDRESS: 4042 Brock Dr. Oakwood GA. 30566	
TAX MAP & PARCEL #: 08053 003011	ACREAGE: 0.43

TYPE OF APPLICATION

- [ ] ANNEXATION AND ZONING
- [ ] REZONING
- [ ] APPEAL
- [ ] SITE PLAN APPROVAL [ ] AMENDMENT
- [ ] CHANGE IN CONDITIONS
- [ ] CONDITIONAL USE
- [ ] VARIANCE TO ZONING ORDINANCE
- [ ] VARIANCE TO SUBDIVISION REGULATIONS
- [ ] SOIL EROSION/DEVELOPMENT PERMIT (1.1 ACRES OR MORE)
- [ ] DEVELOPMENT PERMIT (LESS THAN 1.1 ACRES)
- [ ] ACCEPTANCE OF STREETS
- [ ] PRELIMINARY PLAT
- [ ] EXEMPTION PLAT
- [ ] FINAL PLAT
- [x] OTHER

Deannexation

SIGNATURE: _____

DATE: 6/5/23

OFFICE USE ONLY

FEE: $_____

[ ] CASH [ ] CHECK #

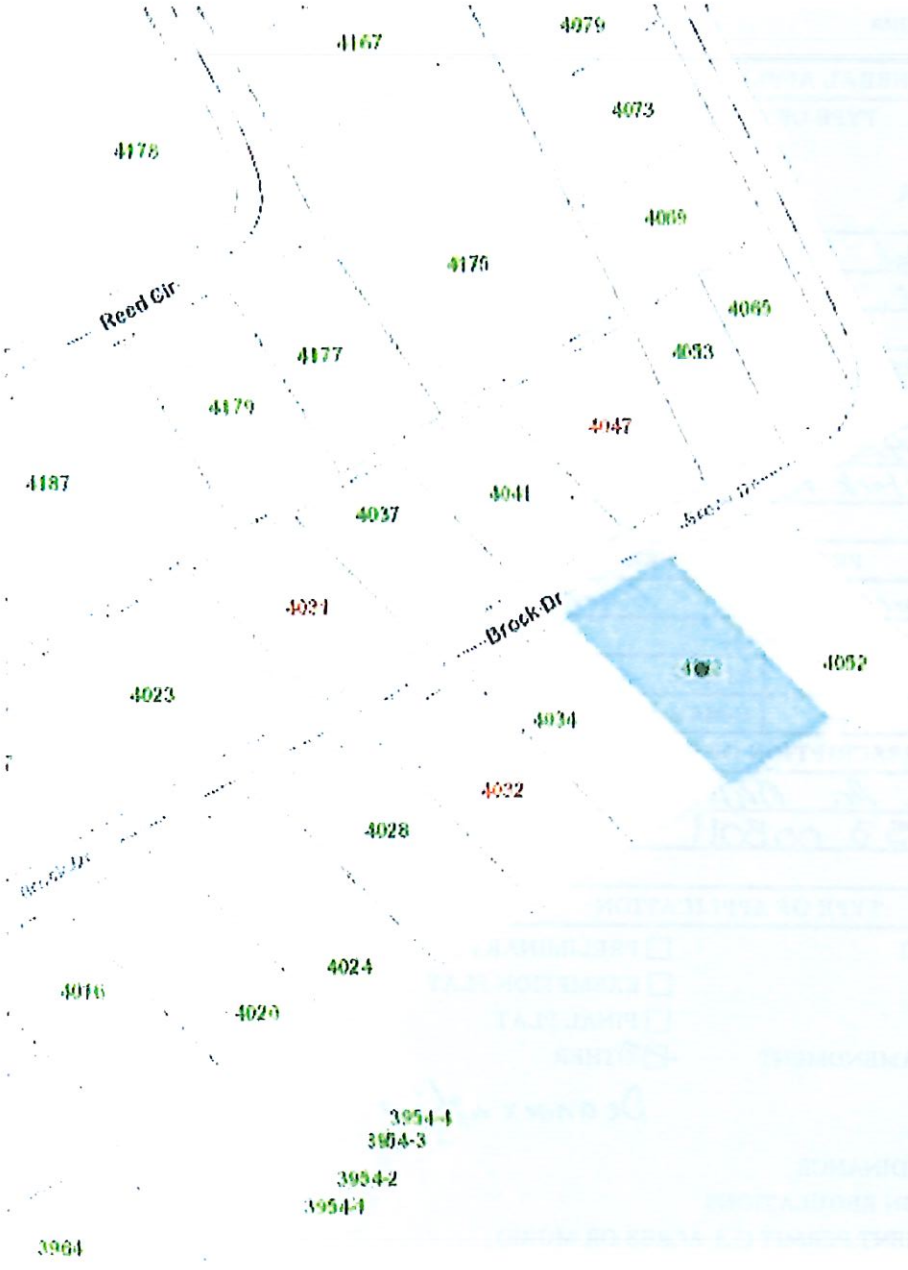
4167
4079
4073
4178
4069
4176
3940
Reed Cir
4177
4069
4053
4179
4047
4187
4041
4037
Brock Dr
4031
4062
4023
4034
4022
4028
4024
4016
4020
3954-4
3954-3
3954-2
3954-1
3964

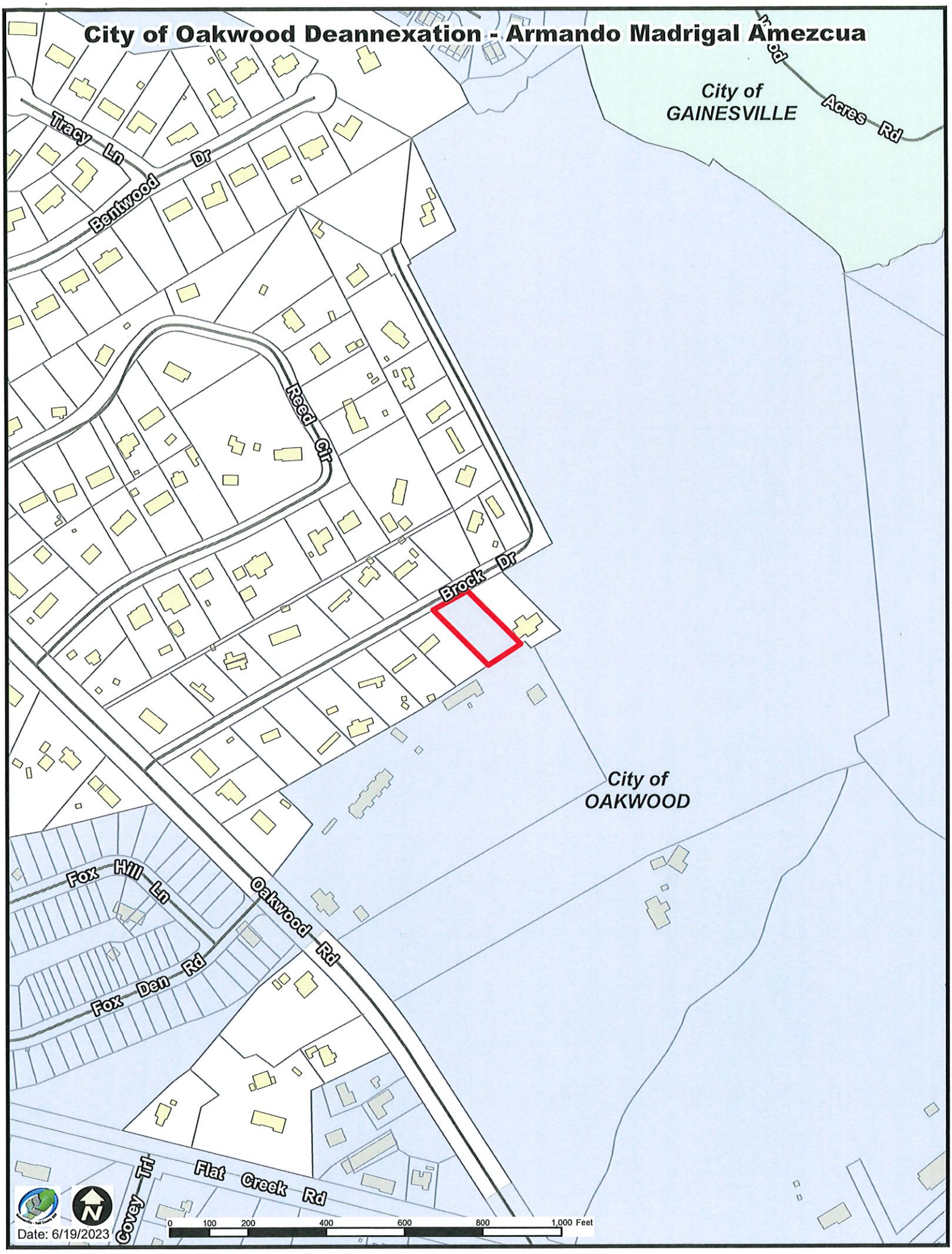
City of Oakwood Deannexation - Armando Madrigal Amezcua
City of GAINESVILLE
Tracy Ln
Bentwood Dr
Reed Cir
Brock Dr
Acres Rd
City of OAKWOOD
Fox Hill Ln
Oakwood Rd
Fox Den Rd
Covey Trl
Flat Creek Rd
0 100 200 400 600 800 1,000 Feet
Date: 6/19/2023

City of Oakwood Deannexation - Armando Madrigal Amezcua
Reed Ct
Brock Dr
City of
OAKWOOD
Oakwood Rd
Fox Hill Ln
Den Rd
Fox
0
100
200
400
600
800
1,000 Feet
Date: 6/19/2023

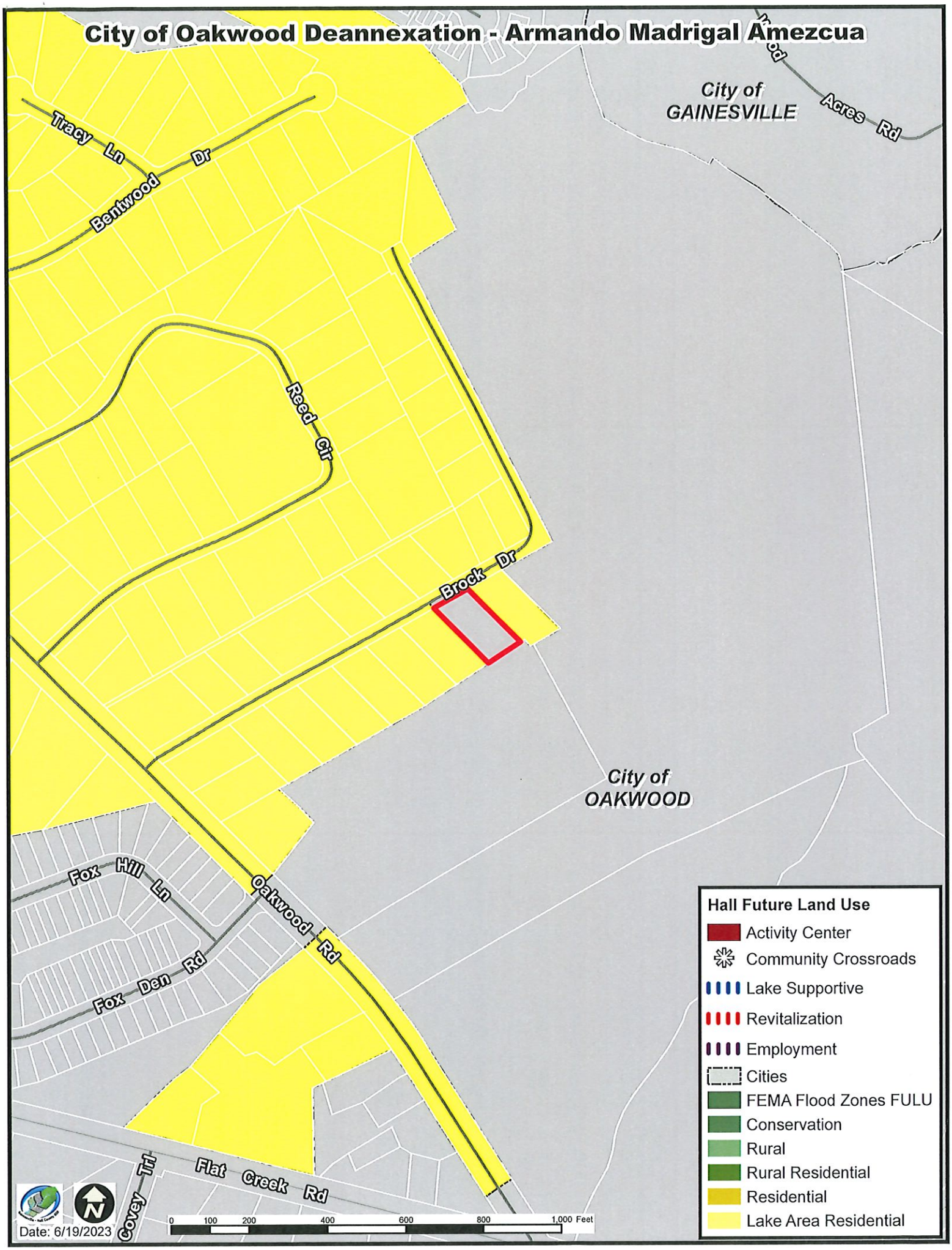
City of Oakwood Deannexation - Armando Madrigal Amezcua
City of GAINESVILLE
Tracy Ln
Bentwood Dr
Reed Cir
Brock Dr
Acres Rd
City of OAKWOOD
Fox Hill Ln
Oakwood Rd
Fox Den Rd
Flat Creek Rd
Covey Trl
Hall Future Land Use
Activity Center
Community Crossroads
Lake Supportive
Revitalization
Employment
Cities
FEMA Flood Zones FULU
Conservation
Rural
Rural Residential
Residential
Lake Area Residential
0 100 200 400 600 800 1,000 Feet
Date: 6/19/2023

AGENDA ITEM

Consent Agenda

REPORT TO: **Work Session (07/10/23)**

REPORT TO: **Voting Meeting (07/13/23)**

ITEM NO: 383/2023

SUBJECT: Approve the Stipulation and Settlement Agreement in the worker's compensation case of Sheriff's Office employee Ernestine Smith, and authorize the Chairman to execute any and all documents necessary to effectuate the settlement, subject to the review and approval by the County Attorney.

Meetings:

Work Session Date: 07/10/23 **Voting Meeting Date:** 07/13/23

Executive Summary:

Presenter: WJLICA

Recommendation:
Approval.

Purpose of Request:
To approve the Stipulation and Settlement Agreement in the worker's compensation case of Sheriff's Office employee Ernestine Smith, and authorize the Chairman to execute any and all documents necessary to effectuate the settlement, subject to the review and approval by the County Attorney.

History:

Deputy Smith suffered a compensable injury to her knee in December of 2020 during a confrontation with a Hall County Detainee at the Jail.

Facts and Issues:
The parties have resolved the worker's compensation case and the Board must approve the Stipulation and Settlement Agreement in order to file the settlement documents with the Georgia Worker's Compensation Board so as to finalize the case.

Options:

Approve or deny the settlement.

Funding Requested	$ 110,000.00
Are funds within current budget?	Yes
Source of Funds	Risk Management Fund
Does the action involve a Resolution, Ordinance, Contract, Agreement, etc.?	Yes

Has it been reviewed by the County Attorney? Yes
Is there a deadline for this item? 2023-07-13

Approvals:

Submit	Budget	Finance	Attorney
WLI	TS	WG	VS
Administration		**Clerk**	
CR		JR	

Attachments:

Financial Supplement
Settlement Documents

HALL COUNTY BOARD OF COMMISSIONERS
FINANCIAL SUPPLEMENT REPORT

AGENDA ITEM 383/2023

Funds Requested: $ 110,000.00

Request Budgeted: Yes

Proposed Source of Funding:

Risk Management Fund

Budget Transfer Requested:

No

Funding Source Items:

Fiscal Year	Fund	Division	Account	Amount
2024	602-RISK MANAGEMENT FUND	1555 - RISK MANAGEMENT	552203-PROPERTY & CASUALTY CLAIMS	$110,000.00

Budget Transfer Items:

Additional Information/Comments:

Settlement documents to be added when received.

Contact for Questions: WJLICA

Phone: (770) 297-2686

IN THE STATE BOARD OF WORKERS' COMPENSATION

STATE OF GEORGIA

SBWC Claim No. 2021-067009

D/A: 12/02/2020

Ernestine Smith
[redacted]
Phone: [redacted]

Employee/Claimant

Hall County, Georgia
2875 Browns Bridge Road
Gainesville, Georgia 30504

Employer/Self-Insurer

Gallagher Bassett Services, Inc.
2915 Premiere Parkway
Suite 350
Duluth, Georgia 30097

Servicing Agent

Jeffrey Kowalski
Montlick & Associates
17 Executive Park Drive
Suite 300
Atlanta, Georgia 30329
(404) 965-1860
Tax I.D.# 58-1570193

Attorney for
Employee/Claimant

Chuck DuBose
DuBose Law, LLC
604 Washington Street
Clarkesville, Georgia 30523
(706) 903-5988

Attorney for
Employer/Self-Insurer

STIPULATION AND SETTLEMENT AGREEMENT

COMES NOW the parties to the above-styled case and file this, their Stipulation and Agreement, with the State Board of Workers' Compensation and respectfully request that it be substituted in lieu of any and all evidence which might be adduced at any hearing on the matter and that an Award be issued by the State Board of Workers' Compensation based hereon as follows:

1. The parties hereto are: ERNESTINE SMITH, hereinafter referred to as "employee," HALL COUNTY, GEORGIA, hereinafter referred to as "employer/self-insurer," and GALLAGHER BASSETT SERVICES, INC., hereinafter referred to as "servicing agent."

2. On December 2, 2020, the employee herein sustained a compensable injury involving her left knee.

3. The employee herein contends she has residual disability as a consequence of her compensable injuries. She also asserts she will require additional medical treatment as a consequence of her injuries.

4. The employer and insurer/servicing agent, on the other hand, contend the employee's condition has improved to the point he is capable of returning to work earning her pre-injury average weekly wage. The employer and insurer/servicing agent also assert the employee will require little, if any, additional medical treatment as a consequence of her injuries.

5. Bona fide and genuine disputes exist between the parties as to the facts in the case, the determination of which disputes would materially affect the amount of compensation to be received by the employee.

6. All parties are represented by counsel.

7. It is the desire and intention of the parties hereto to forever and irrevocably settle any and all claims and disputes arising out of the accident of December 2, 2020, by entering into the Stipulation and Agreement and having it approved as an Award of the State Board of Workers' Compensation, in accord with the general purposes and intent of the workers' compensation laws of Georgia, to forever and irrevocably settle any and all claims and disputes arising out of said accident, including claims for the payment of workers' compensation benefits of any kind and nature as well as claims for expenses for medical treatment and vocational rehabilitation. It is further agreed specifically between the parties hereto that each party waives any right to have the total amount awarded in the case either increased or decreased by seeking to have the Award hereunder modified or reviewed either under the provisions of O.C.G.A. § 34-9-104 or otherwise and each party agrees to be estopped from either taking or participating in any such attempted action.

8. The employee stipulates that there are no outstanding child support liens or attorney fee liens that would prohibit full disbursement of the settlement funds in this case.

9. It is further agreed between the parties that the employee has sustained no superadded injury or injuries to the injury of on or about December 2, 2020.

NOW THEREFORE, it is hereby specifically stipulated, covenanted and agreed by and between the parties hereto that the employer and insurer/servicing agent agree as follows:

1. To pay jointly in a lump sum, waiving commutation of interest, to the employee, the amount of ONE HUNDRED TEN THOUSAND DOLLARS AND NO/100 ($110,000.00)(of which $82,343.45 is to be paid to the employee and $27,656.55 is to be paid to the employee's attorney, Jeffrey Kowalski, which represents $27,500.00 as attorney fees for services rendered and $156.55 for litigation expenses in this matter), which sum the employee agrees to and does accept in full, final and irrevocable settlement of any and all claims which have been or which might be claimed to arise out of the alleged accident of December 2, 2020, including claims for workers' compensation benefits of any kind or nature whatsoever, as well as claims for medical expenses or vocational rehabilitation expenses, subject to paragraph 3 below.

2. All checks to be paid pursuant to the above paragraph are to be sent directly to the attorney for the employee, Jeffrey Kowalski, at the address listed on the second page of this Stipulation and Agreement.

3. All incurred authorized medical expenses which were reasonable and necessary have been or will be paid. The employer/self-insurer is not responsible for any other medical expenses incurred from the date of the approval of this Stipulation and Agreement. The parties agree that the settlement amount includes remuneration for future medical in lieu of an open medical provision. By being a signatory to this Agreement, the employee acknowledges the limitation with regard to payment of such medical expenses and agrees that any medical expenses incurred after the date of the approval of this Stipulation and Agreement into the future shall be deemed unauthorized and will be the sole responsibility of the employee and shall not be the responsibility of the employer/self-insurer.

4. The parties agree that the $82,343.45 to be paid to the employee represents a fair calculation of lost wage earning capacity over the lifetime of the employee directly attributable to the work injury; and that said sum shall be paid without commutation of interest, and shall be considered, upon approval of this stipulated settlement by the Board, as already accrued weekly indemnity which shall represent the negotiated compromise agreement that the employee's life expectancy is 319.2 months (DOB: ,orward from and including the date of this Stipulation; that the same represents $257.96 per month over the balance of 319.2 months of life expectancy into the future. The employee's life expectancy is computed pursuant to National Vital Statistics Reports Life Table, Vol 69., No. 12 (November 17, 2020).

5. The Employee/Claimant hereby affirms that she is not eligible for Social Security Disability Benefits and is not currently Medicare eligible and has no reasonable expectation of same within the next 30 months nor has she received any Medicare Benefits.

IT IS AGREED that the final accord and satisfaction of ONE HUNDRED TEN THOUSAND DOLLARS AND NO/100 ($110,000.00) has been reached as a compromise between the parties which gives due weight and regard to the conflicting evidence available on the issues and disputes between the parties and is in keeping with the provisions of the workers' compensation laws of the state.

IT IS FURTHER AGREED between the parties that all authorized expenses for medical or vocational rehabilitation which were reasonable and necessary have been, or will be paid subject to the provisions in paragraph 3 and that any other medical expenses or expenses for vocational rehabilitation are to be borne by the employee and are to be paid by the employee and not by the employer and insurer/servicing agent, and said items will not be the responsibility of the employer or the insurer/servicing agent herein.

IT IS AGREED by the parties that the above settlement amount may be reduced by the amount of any payment made by the employer and insurer/servicing agent to the employee for weekly benefits covering days after the date of approval of the agreement.

WHEREFORE, the parties have hereunto set their hands and respectfully request that the Board approve the Stipulation and Agreement and issue an Award based hereon.

IT IS HEREBY CERTIFIED that a copy of the Stipulation and Agreement has been mailed to the employer herein prior to the signature of all parties.

This 20 day of June, 2023.

Ernestine Smith
ERNESTINE SMITH
Employee/Claimant

JEFFREY KOWALSKI
Attorney for Employee/Claimant

CHUCK E. DUBOSE
Attorney for Employer/Self-Insurer

Case Number: 731198 **Statement of Distribution** Attorney: Jeffrey Kowalski

Ernestine Smith vs. Hall County Board of Commissioners

RECOVERY:

Temporary Total Disability Benefits	$0.00	
Temporary Partial Disability Benefits	$0.00	
Permanent Partial Disability Benefits	$0.00	
Settlement	$110,000.00	
	Total Recovery:	$110,000.00

I. Advance by 3rd Parties	0	$0.00	
	0	$0.00	
		Total	$0.00
II. Money Owed to 3rd Parties	0	$0.00	
	0	$0.00	
		Total	$0.00

III. To Montlick & Associates, P.C.
(costs, reimbursements, fees)

(a) Attorney's Fees			$27,500.00
(b) Court Costs		$0.00	
(c) Photography Charge		$0.00	
(d) Postage		$0.00	
(e) Calls		$20.00	
(f) Deposition and Court Reporting		$0.00	
(g) Travel Expenses		$0.00	
(h) Administrative Expenses		$50.00	
(i) Firm Mileage Expenses		$0.00	
(j) Medical Reports	Longstreet	$77.55	
	0	$0.00	
	0	$0.00	
	0	$0.00	
(k) Photostatic Copies		$9.00	
(l) Courier Services		$0.00	
(m) Other Expenses:	0	$0.00	
	0	$0.00	
	Total Expenses		$156.55
Total Due Montlick & Associates, P.C.			$27,656.55

TOTAL BALANCE DUE CLIENT ..... = $82,343.45

I, the undersigned, after reviewing the foregoing receipts and payouts do hereby approve the settlement, the payouts, and the fees charged. Upon receipt of Montlick & Associates, P.C.'s check(s) totaling the amount following "TOTAL BALANCE DUE CLIENT" above, this case and all matters arising or related thereto including the acts and conduct of Montlick & Associates, P.C., its agents, servants, and employees, shall be considered settled and concluded with no further duty owed to client from Montlick & Associates. P.C.

IN WITNESS WHEREOF, I have hereunto set my hand and affixed my seal this the

____ day of _____, ____.

Ernestine Smith
Ernestine Smith CLIENT

I have received the above balance due.

_____ DATE

Ernestine Smith CLIENT

Attorney Reviewed ( )
Approved by ( )

SOD Rev6/15/2023

LETTER OF RESIGNATION

TO WHOM IT MAY CONCERN:

In further consideration of the settlement amount specified in the Stipulation and Settlement Agreement, the Employee/Claimant agrees that she hereby resigns from said employment with Hall County, Georgia, effective immediately, and agrees to refrain from reapplying for subsequent employment with said Employer at any time in the future.

This, the 20 day of June, 2023.

Sincerely,

Ernestine Smith

ERNESTINE SMITH

Witnessed by:

Theresa Parker

Name

6-20-23

Date

GENERAL RELEASE, WAIVER, VOLUNTARY RESIGNATION OF EMPLOYMENT AND AGREEMENT NOT TO RE-APPLY/RE-HIRE

KNOW ALL MEN BY THESE PRESENT, that the undersigned, Ernestine Smith, being over the age of twenty-one (21) years and a resident of the State of Georgia, has voluntarily resigned from employment with Hall County, Georgia, effective this date. Ernestine Smith further agrees on behalf of herself, her heirs, executors, administrators, personal representatives and assigns, as follows:

(1) That she will neither challenge the voluntary resignation of her employment or the termination of her employment with Hall County, Georgia, nor will she apply for unemployment benefits against Hall County, Georgia, or at any time, seek re-employment with Hall County, Georgia, or any of its affiliates and/or subsidiaries and acknowledges she would be subject to immediate dismissal and termination in the event she was re-employed with Hall County, Georgia.

(2) That she will not commence any lawsuit or claim for damages against Hall County, Georgia.

(3) That she forever releases and waives any claim of liability against Hall County, Georgia, arising from her employment with Hall County, Georgia, and agrees to hold harmless Hall County, Georgia, as of the date this Release is signed and executed by her.

(4) That she forever releases and waives any claim of liability against Hall County, Georgia, for any possible action in the foregoing regard, including, but not limited to, any claims under the Age Discrimination in Employment Act of 1967, as amended; Title VII of the Civil Rights Acts of 1964, as amended; Section 1981 of the Civil Rights Act of 1966; the American With Disabilities Act of 1990; Older Workers Benefit Protection Act of 1990; and, any claims under any other Federal, State, or Local Enactment of Rule of Law or Equity, including claims based on principles of contract and tort law.

(5) That she acknowledges that the consideration for the undersigned, Ernestine Smith, to enter into and execute this Release shall be the settlement of her workers' compensation claim and other good and valuable consideration, the sufficiency of which is hereby acknowledged by both parties.

I, Ernestine Smith, knowingly and voluntarily execute this General Release, Waiver, Voluntary Resignation of Employment and Agreement Not to Re-Apply/Re-Hire in accordance with the above-described terms. In consideration of mutual promises of

confidentiality with my Employer, which consideration is separate and distinct from the monetary consideration being paid for resolution of my workers' compensation claim and/or this General Release, I agree all terms of this settlement and the amount of this settlement are to remain confidential and will not be disclosed by myself or my attorney to any other person or entity except in response to a valid subpoena, court order, or other valid legal process and except for consultation with financial, legal, or other professional advisors.

I acknowledge that I was not coerced or placed under duress to execute this Release, Waiver, Voluntary Resignation of Employment and Agreement Not to Re-Apply/Re-Hire.

This General Release, Waiver, Voluntary Resignation of Employment and Agreement Not to Re-Apply/Re-Hire became effective the date of execution of this document.

This 20 day of June, 2023.

Ernestine Smith
ERNESTINE SMITH
Employee/Claimant

Sworn to and subscribed before me,
this 20th day of June, 2023.

Theresa Paterson
Notary Public
My Commission Expires: 11-3-2024

Theresa Paterson NOTARY PUBLIC Habersham County, GA

Gay Perry
Witness

AGENDA ITEM

Consent Agenda

REPORT TO: **Work Session (07/10/23)**

REPORT TO: **Voting Meeting (07/13/23)**

ITEM NO: 379/2023

SUBJECT: Approval and authorization for the Chairman to execute an Intergovernmental Agreement with the Town of Braselton, City of Buford, Town of Clermont, City of Flowery Branch, City of Gainesville, City of Gillsville, City of Lula, City of Oakwood, and City of Rest Haven regarding a Transportation Special Purpose Local Option Sales and Use Tax (TSPLOST) and authorization for the Chairman to take any additional action necessary to effectuate the Agreement, subject to review and approval by the County Attorney.

Meetings:

Work Session Date: 07/10/23 **Voting Meeting Date:** 07/13/23

Executive Summary:

Presenter: WL

Recommendation:
Approval

Purpose of Request:
Approval and authorization for the Chairman to execute an Intergovernmental Agreement with the Town of Braselton, City of Buford, Town of Clermont, City of Flowery Branch, City of Gainesville, City of Gillsville, City of Lula, City of Oakwood, and City of Rest Haven regarding a Transportation Special Purpose Local Option Sales and Use Tax (TSPLOST) and authorization for the Chairman to take any additional action necessary to effectuate the Agreement, subject to review and approval by the County Attorney.

History:

The County and all of its Municipalities met to discuss a possible TSPLOST Intergovernmental Agreement on April 25, 2023. Following negotiations, the attached Intergovernmental Agreement has been proposed by all parties.

Facts and Issues:
The proposed TSPLOST program will run for five years, and the rate of the tax will be one percent. The Intergovernmental Agreement sets forth the distribution formula for TSPLOST proceeds.

Options:
In order for the TSPLOST Intergovernmental Agreement to become effective, Hall County voters must approve a referendum set for November 7, 2023.

Funding Requested $ 0.00

Are funds within current budget?	No
Source of Funds	
Does the action involve a Resolution, Ordinance, Contract, Agreement, etc.?	Yes
Has it been reviewed by the County Attorney?	Yes
Is there a deadline for this item?	

Approvals:

Submit	Budget	Finance	Attorney
BC	TS	WG	VS
Administration		**Clerk**	
CR		JR	

Attachments:

TSPLOST IGA

HALL COUNTY BOARD OF COMMISSIONERS
FINANCIAL SUPPLEMENT REPORT

AGENDA ITEM 379/2023

Funds Requested: $ 0.00

Request Budgeted: No

Proposed Source of Funding:

Budget Transfer Requested: No

Funding Source Items:

Budget Transfer Items:

Additional Information/Comments:

Contact for Questions: WL

Phone: 770-297-2686

STATE OF GEORGIA
COUNTY OF HALL

TRANSPORTATION SPECIAL PURPOSE LOCAL OPTION SALES TAX INTERGOVERNMENTAL AGREEMENT

This Intergovernmental Agreement (the "Agreement") is made this _____ day of July, 2023 by and among Hall County, Georgia (hereinafter the "County"), a political subdivision of the State of Georgia, the Town of Braselton, Georgia, a municipal corporation, the City of Buford, Georgia, a municipal corporation, the Town of Clermont, Georgia, a municipal corporation, the City of Flowery Branch, Georgia, a municipal corporation, the City of Gainesville, Georgia, a municipal corporation, the City of Gillsville, Georgia, a municipal corporation, the City of Lula, Georgia, a municipal corporation, the City of Oakwood, Georgia, a municipal corporation, and the City of Rest Haven, a municipal corporation (hereinafter the "Municipalities"), acting pursuant to validly adopted approvals by their respective governing bodies. The County and the Municipalities do hereby agree as follows:

WITNESSETH:

WHEREAS, Hall County and its Municipalities constitute the regional hub for Northeast Georgia with regard to the provision of medical care, banking services, and commerce; and

WHEREAS, the location of Lake Lanier in Hall County has fueled exceptional tourism opportunities within Hall County and its Municipalities; and

WHEREAS, Interstate 985 traverses Hall County and has experienced an unprecedented increase in vehicle trips per day during the last decade, bringing residents from neighboring counties into Hall County and its Municipalities; and

WHEREAS, one of the main railroad lines in the nation traverses Hall County, and Hall County is partnering with the state and federal governments to create an inland port in Hall County along the railroad line; and

WHEREAS, the creation of the inland port will increase the transportation of goods, commodities, and materials through Hall County and its Municipalities; and

WHEREAS, numerous state routes provide connectivity among Hall County, its Municipalities, and major transportation corridors such as Interstate 85 and Georgia 400, and such transportation corridors provide direct access to the Interstate System serving the Southeastern United States; and

WHEREAS, Hall County and its Municipalities are experiencing rapid population growth as new residents determine that Hall County and its Municipalities provide outstanding opportunities to live, work, and play; and

WHEREAS, economic development activities within Hall County and its Municipalities are providing incentives for residents from neighboring counties to seek employment within Hall

County and its Municipalities; and

WHEREAS, all of these factors have resulted in the need for Hall County and its Municipalities to explore alternatives to place before their residents regarding transportation improvements; and

WHEREAS, one such alternative is found in Article 5A of Chapter 8 of Title 48 of the Official Code of Georgia Annotated, as amended (the "Act"), which authorizes the imposition of a single county Transportation Special Purpose Local Option Sales and Use Tax (the "TSPLOST") to fund authorized transportation Purposes for the use and benefit of the County and qualified Municipalities within the County; and

WHEREAS, in accordance with Official Code of Georgia Annotated § 48-8-262(a)(l), the County and its Municipalities have determined that the majority of counties in the region have not proposed a referendum on a regional special district transportation sales and use tax; and

WHEREAS, the governing authorities of the County and the Municipalities met together on April 25, 2023 to discuss possible projects and purposes for inclusion in the Transportation Special Purpose Local Option Sales and Use Tax referendum in conformity with the requirements of Official Code of Georgia Annotated § 48-8-262(a)(2); and

WHEREAS, the County and its Municipalities desire to execute an Intergovernmental Agreement in order to place before the voters of Hall County the question whether a Transportation Special Purpose Local Option Sales and Use Tax should be utilized as a tool to help manage transportation challenges; and

WHEREAS, Hall County proposes to issue general obligation debt in the amount of up to $130,000,000 (One Hundred Thirty Million Dollars) to fund some of the Projects and Purposes defined herein; and

WHEREAS, the Town of Braselton proposes to issue general obligation debt in the amount of up to $3,500,000 (Three Million Five Hundred Thousand Dollars) to fund some of the Projects and Purposes defined herein; and

WHEREAS, the City of Flowery Branch proposes to issue general obligation debt in the amount of up to $5,000,000 (Five Million Dollars) to fund some of the Projects and Purposes defined herein; and

WHEREAS, the City of Gainesville proposes to issue general obligation debt in the amount of up to $40,000,000 (Forty Million Dollars) to fund some of the Projects and Purposes defined herein; and

WHEREAS, the City of Oakwood proposes to issue general obligation debt in the amount of up to $1,000,000 (One Million Dollars) to fund some of the Projects and Purposes defined herein;

NOW THEREFORE, in consideration of the premises and undertakings hereinafter set forth, it is agreed by and among the County and the Municipalities as follows:

Section 1. Representations of the Parties.

Each party hereto makes the following representations and warranties which are specifically relied upon by all other parties as a basis for entering into this Agreement:

A. The County agrees that it will take all actions necessary to call an election, to be held in all of the voting precincts in Hall County on November 7, 2023, for the purpose of submitting to the qualified voters of the County for their approval the question of whether or not a Transportation Special Purpose Local Option Sales and Use Tax of one percent shall be imposed on all sales and uses subject to the sales and use tax in the special district of Hall County, as authorized by the Act for five years (20 calendar quarters) commencing on April 1, 2024 for the purpose of funding specified Projects (hereinafter more fully referred to and defined), and whether or not the County, Braselton, Flowery Branch, Gainesville, and Oakwood shall be authorized to issue general obligation debt to finance certain of the Projects and Purposes. The amount of net proceeds to be raised by the Transportation Special Purpose Local Option Sales and Use Tax is estimated to be $325,000,000 (Three Hundred and Twenty-Five Million Dollars).

B. The Municipalities are legally chartered municipal corporations as defined by law and judicial interpretation. During a public meeting of its governing board, conducted in compliance with the Open Meetings Act, Official Code of Georgia Annotated § 50-14-1, et seq., each of the Municipalities validly approved the execution of this Agreement.

C. The County is a political subdivision of the State of Georgia created and existing under the Constitution and laws of the State. During a public meeting conducted in compliance with the Open Meetings Act, Official Code of Georgia Annotated § 50-14-1, et seq., the County approved the execution of this Agreement.

D. It is the intention of the County and the Municipalities to comply in all respects with Official Code of Georgia Annotated § 48-8-260 et seq., and all provisions of this Agreement shall be construed in light of Official Code of Georgia Annotated § 48-8-260, et seq.

Section 2. Conditions Precedent.

The obligations of all parties under this Agreement are contingent upon the following prior events:

A. The adoption of a Resolution by the Board of Commissioners of Hall County authorizing the imposition of the Transportation Special Purpose Local Option Sales and Use Tax and calling the necessary election in accordance with the provisions of Official Code of Georgia Annotated § 48-8-262(d).

B. The approval of the Transportation Special Purpose Local Option Sales and Use Tax by a majority of the voters in the County voting in the election (for those purposes) to be held in accordance with the provisions of Official Code of Georgia Annotated § 48-8-263.

C. This Agreement is further contingent upon the collection of Transportation Special Purpose Local Option Sales and Use Tax revenues by the State of Georgia Department of Revenue and its transfer of the same to the County.

Section 3. Rate of Tax: Estimated Amount; Effective Date and Term of the Tax.

The Transportation Special Purpose Local Option Sales and Use Tax, subject to approval in an election to be held on November 7, 2023, shall be imposed at the rate of one percent (1%). The total estimated dollar amount for the net proceeds of the tax is $325,000,000 (Three Hundred and Twenty-Five Million Dollars). The maximum period of time for which the tax shall be imposed is five years, beginning on April 1, 2024. The maximum amount of net proceeds to be raised by the Transportation Special Purpose Local Option Sales and Use Tax shall correspond to the period of time that the Transportation Special Purpose Local Option Sales and Use Tax shall be imposed. Hall County and its Municipalities intend for the maximum amount of net proceeds to be raised by the Transportation Special Purpose Local Option Sales and Use Tax to be the maximum amount of net proceeds allowed by law, specifically in accordance with House Bill 934 which became effective on May 2, 2022.

Section 4. Effective Date and Term of This Agreement.

This Agreement shall commence upon the date of its execution by Hall County and all Municipalities and shall terminate upon the latter of:

A. The official declaration by the Board of Elections and Registration of Hall County of the failure of the election described in this Agreement; or

B. The expenditure by the County and the Municipalities of the last dollar of money collected from the Transportation Special Purpose Local Option Sales and Use Tax even if such expenditure is made after the expiration of the Transportation Special Purpose Local Option Sales and Use Tax collection period.

Section 5. Purposes and Projects, Priority and Order of Funding.

A. In recognition of the need for transportation improvements across Hall County and its Municipalities, the parties agree that the estimated total net proceeds ($325,000,000) shall be utilized for the following transportation purposes (the "Purposes"): roads, streets, bridges, including without limitation road, street, and bridge purposes pursuant to paragraph (1) of subsection (b) of Official Code of Georgia Annotated Section 48-8-121, trails, roundabouts, sidewalks, traffic signals, including new general obligation debt and other multi-year obligations issued to finance such purposes, and all accompanying infrastructure and services necessary to provide access to these transportation facilities.

B. The transportation Projects to be funded in whole or in part from Transportation Special Purpose Local Option Sales and Use Tax proceeds (the "Projects"), are listed in Exhibit A, which is attached hereto and made part of this Agreement. The parties acknowledge and agree that at least 30% of the estimated revenues are being expended on Projects that are consistent with the Statewide Strategic Transportation Plan as defined in Official Code of Georgia Annotated § 32-2-22.

C. All transportation Purposes included in this Agreement shall be funded from proceeds from the tax except as otherwise agreed. The Projects and Purposes described herein shall be funded from Transportation Special Purpose Local Option Sales and Use Tax proceeds as provided in this Agreement, and as specified in Exhibit A. Each party shall have the sole discretion to reduce the scope of a Project in the event of a funding shortfall.

Section 6. Transportation Special Purpose Local Option Sales and Use Tax Funds; Separate Accounts; No Commingling.

A. A special fund or account shall be created by the County and designated as the 2024 Hall County Special District Mass Transportation Special Purpose Local Option Sales and Use Tax Fund (the "County Transportation Special Purpose Local Option Sales and Use Tax Fund"). The County shall select a bank which shall act as a depository and custodian of the County Transportation Special Purpose Local Option Sales and Use Tax Fund upon such terms and conditions as may be acceptable to the County.

B. Each Municipality shall create a special fund to be designated as the 2024 [Municipality name] Special District Mass Transportation Special Purpose Local Option Sales and Use Tax Fund (each a "Municipal Transportation Special Purpose Local Option Sales and Use Tax Fund"). Each Municipality shall select a bank which shall act as a depository and custodian of the Transportation Special Purpose Local Option Sales and Use Tax proceeds received by each Municipality upon such terms and conditions as may be acceptable to the Municipality.

C. All Transportation Special Purpose Local Option Sales and Use Tax proceeds shall be maintained by the County and each Municipality in the separate accounts or funds established pursuant to this Section. Transportation Special Purpose Local Option Sales and Use Tax proceeds shall not be commingled with other funds of the County or the Municipalities and shall be used exclusively for the purposes detailed in this Agreement. No funds other than Transportation Special Purpose Local Option Sales and Use Tax proceeds shall be placed in such accounts.

Section 7. Allocation and Disbursement of Transportation Special Purpose Local Option Sales and Use Tax Proceeds.

A. Upon receipt by the County of Transportation Special Purpose Local Option Sales and Use Tax proceeds collected by the State Department of Revenue, the County shall immediately deposit said proceeds in the Transportation Special Purpose Local Option Sales and Use Tax Fund. The monies in the Transportation Special Purpose Local Option Sales and Use

Tax Fund shall be held and applied to the cost of acquiring, constructing and installing the Projects that have been designated as Major Projects by the County and all Municipalities (hereinafter the "Major Projects") and the County capital outlay projects listed in Exhibit A and as provided in Paragraph B of this Section. In the event that a Major Project is specifically designated herein to be administered by a specific Municipality, the County shall, within 30 days of receipt of funds from the State Revenue Commissioner, transfer the funds designated for such Major Project to the designated Municipality on a pro-rata basis with Major Projects to be administered by the County and other specifically designated Municipalities according to the amount of proceeds received each month for Major Projects. The following Major Projects have been specifically designated in Exhibit A to be administered by specific Municipalities:

Ridge Road Corridor Improvements – Administered by the City of Gainesville

Park Hill Drive Intersection Improvements – Administered by the City of Gainesville

Hilton Drive Extension – Administered by the City of Gainesville

Old Oakwood Road at Balus Creek Road Culvert Replacement and Road Alignment) – Administered by the City of Oakwood

Main Street, Flat Creek and Old Oakwood Road Intersection – Administered by the City of Oakwood

Frazer Road Corridor Improvements – Administered by the City of Buford

Thompson Mill Road Improvements – Administered by the Town of Braselton

B. The County, following each monthly deposit of the Transportation Special Purpose Local Option Sales and Use Tax proceeds in the Transportation Special Purpose Local Option Sales and Use Tax Fund, shall reserve $4,333,333.33 (Four Million Three Hundred Thirty-Three Thousand Three Hundred Thirty-Three and 33/100 Dollars) of the monthly Transportation Special Purpose Local Option Sales and Use Tax proceeds received to pay the cost of the Major Projects to be administered by the County or specifically designated Municipalities as set forth in Exhibit A to this Agreement on a pro rata basis determined by the percentage of the individual Project as a portion of Major Projects. For example, the percentage of the Project known as the Thompson Mill Road Improvements is 0.38 percent compared to the total Major Projects List, as shown on Exhibit A, so each month Hall County would disburse the sum of $16,666.67 to the Town of Braselton from the Major Projects reserve to facilitate the Town of Braselton's administration of the construction of the Thompson Mill Road Improvements Project, assuming that at least $4,333,333.33 is received as TSPLOST proceeds from the State Revenue Commissioner for that month. If at least $4,333,333.33 is not received for the month, then the distribution by Hall County to the Town of Braselton for that month would be 0.38 percent of the funds received by Hall County from the State Revenue Commissioner for that month. Additionally, if the net proceeds from the Transportation Special Purpose Local Option

Sales Tax exceed the sum of $4,333,333.33 for the month, the County shall disburse to each Municipality its pro-rata allocation of the remaining monthly Transportation Special Purpose Local Option Sales and Use Tax net proceeds received, within thirty (30) days of the County's receipt of such Transportation Special Purpose Local Option Sales and Use Tax proceeds. The County or the specifically designated Municipality shall expend the monies reserved for Major Projects to construct and install such Major Projects. The County and the Municipalities shall receive a pro-rata allocation of the remaining Transportation Special Purpose Local Option Sales and Use Tax net proceeds, after the allocation for the Major Projects, on a monthly basis in accordance with the table below. The aggregate net remaining Transportation Special Purpose Local Option Sales and Use Tax proceeds are estimated to be $65,000,000 (Sixty-Five Million Dollars) over the five (5) year period.

Project	County/Municipality	Pro Rata %	Estimated Cost
County Projects (excluding Major Projects)	Unincorporated Hall County	42.5000%	27,625,000
Braselton	Braselton	3.9981%	2,598,748
Flowery Branch	Flowery Branch	9.7953%	6,366,932
Gainesville	Gainesville	29.9856%	19,490,608
Buford	Buford	3.3984%	2,208,936
Gillsville	Gillsville	0.4998%	324,843
Clermont	Clermont	1.3993%	909,562
Oakwood	Oakwood	5.3974%	3,508,310
Lula	Lula	2.9986%	1,949,061
Rest Haven	Rest Haven	0.0277%	18,000
			$65,000,000

Notwithstanding the foregoing, once the County has deposited the aggregate amount of $260,000,000 (Two Hundred Sixty Million Dollars) (the total estimated cost of the Major Projects) into the account for the payment of the cost of the Major Projects, the County shall make no further deposits of Transportation Special Purpose Local Option Sales and Use Tax proceeds into such account for Major Projects. As among the Major Projects, the County, or the applicable specifically designated Municipality, may allocate excess proceeds not needed for a particular Major Project, once satisfactorily completed, to one or more other Major Projects as determined by the County, or with regard to Major Projects to be administered by a specifically designated Municipality, the specifically designated Municipality may allocate excess proceeds for such Major Project administered by such Municipality to other Major Projects administered by such Municipality or to Major Projects administered by the County. In the event that the final, actual aggregate cost of the Major Projects is less than $260,000,000, any excess proceeds designated for Major Projects shall be disbursed in the same manner as the remaining Transportation Special Purpose Local Option Sales and Use Tax proceeds are to be disbursed as set forth in the table above.

Proceeds over and above the amount estimated to be received pursuant to this Referendum (herein, "Excess Proceeds") shall be allocated in accordance with the table above and shall be used

solely for the Purposes listed herein. Each party shall expend its portion (determined using the percentages set forth in the table above) of Excess Proceeds from the Transportation Special Purpose Local Option Sales and Use Tax on one or more of its Projects set forth in Exhibit A of this Agreement.

C. No Purpose or Project will be given preference in the funding and distribution process in such a way that the monthly distribution formula set forth herein is affected. Each party to this Agreement shall determine the priority or order in which its designated transportation purposes will be fully or partially funded based upon the distribution formula set forth in this Agreement. Each party's determination of the priority or order of funding for its transportation purposes shall be based on the extent to which a Project is ready to be initiated, the most recently updated assessment of the transportation needs of the applicable party, and practical considerations regarding the effect of the Project upon the traffic flow within the jurisdiction. The parties anticipate that projects may be funded concurrently so as to maximize the impact of the Transportation Special Purpose Local Option Sales and Use Tax proceeds on the transportation needs of Hall County and its Municipalities.

D. Should any Municipality cease to exist as a legal entity before all funds are distributed under this Agreement, that Municipality's share of the funds subsequent to dissolution shall be paid to the County as part of the County's share, unless an act of the Georgia General Assembly makes the defunct Municipality part of another successor municipality. If such an act is passed, the defunct Municipality's share shall be paid to the successor Municipality in addition to all other funds to which the successor Municipality would otherwise be entitled.

Section 8. Project Monitoring, Record Keeping and Reporting, Audits.

A. All parties to this Agreement shall promptly move forward with the acquisition and construction of the Projects in an efficient and economical manner and at a reasonable cost in conformity with all applicable laws, ordinances, rules and regulations of any governmental authority having jurisdiction over the Projects.

B. The governing authority of the County and the governing authority of each of the Municipalities shall comply with the requirements of Official Code of Georgia Annotated § 48-8-269.5(a)(2), which requires that the governing authority of each county and the governing authority of each qualified municipality receiving any proceeds from the tax under this part to maintain a record of each and every purpose for which the proceeds of the tax are used. A schedule shall be included in each annual audit which shows for each purpose in the resolution calling for imposition of the tax the original estimated cost, the current estimated cost if it is not the original estimated cost, amounts expended in prior years, and amounts expended in the current year. The auditor shall verify and test expenditures sufficient to provide assurances that the schedule is fairly presented in relation to the financial statements. The auditor's report on the financial statements shall include an opinion, or disclaimer of opinion, as to whether the schedule is presented fairly in all material respects in relation to the financial statements taken as a whole. Certain information must be included in the annual audit of the County or each of the

Municipalities during the term of this Agreement. The distribution and use of all Transportation Special Purpose Local Option Sales and Use Tax proceeds deposited in the County Transportation Special Purpose Local Option Sales and Use Tax Fund and each Municipal Transportation Special Purpose Local Option Sales and Use Tax Fund shall be audited annually by an independent certified public accounting firm. The County and the Municipalities agree to cooperate with the independent certified public accounting firm in any audit by providing all necessary information. Each Municipality shall provide the County a copy of its annual audit.

C. The governing authority of the County and the governing authority of each of the Municipalities shall comply with the requirements of Official Code of Georgia Annotated § 48-8-269.6, which requires the publication of annual reports concerning expenditures for the Purposes.

D. The County and Municipalities agree to maintain thorough and accurate records concerning receipt of Transportation Special Purpose Local Option Sales and Use Tax proceeds and expenditures for each Project or Purpose undertaken by the County or respective Municipality as required to fulfill the terms of this Agreement.

Section 9. Completion of Projects.

A. The County and the Municipalities acknowledge that the costs shown for each Purpose described in Exhibit A are estimated amounts.

B. When the County or a Municipality, as applicable, confirms that all of its Projects are completed, any excess proceeds held by the confirming County or Municipality shall, for the purposes of this Agreement, be deemed excess funds and disposed of as follows: Excess Proceeds subject to this subsection shall be used solely for the purpose of reducing any indebtedness of the County or the applicable qualified Municipality within the special district other than indebtedness incurred pursuant to this part. If there is no such other indebtedness or if the Excess Proceeds exceed the amount of any such other indebtedness, then the Excess Proceeds shall next be paid into the general fund of such County or the applicable qualified Municipality, it being the intent that any funds so paid into the general fund of such County or applicable qualified Municipality be used for the purpose of reducing ad valorem taxes according to Official Code of Georgia Annotated § 48- 8-269.5(f)(2).

Section 10. Project Management.

The County, or the applicable Municipality for municipal projects to be administered by such Municipality, may contract for Project Management regarding its Major Projects, and Project Management shall be funded from Transportation Special Purpose Local Option Sales and Use Tax proceeds. Project Management shall be performed by one or more persons or entities, and the Project Management function shall work out of the Gainesville-Hall Metropolitan Planning Organization (hereinafter "MPO") office structure. The total annual compensation for the Project Management function described in this paragraph, including wages and benefits, if applicable,

shall not exceed $300,000 (Three Hundred Thousand Dollars). Municipalities may request that the Project Management function described in this paragraph be used for certain Municipal Projects which are not designated as Major Projects. In such event, the Municipality shall contract with the Project Management person or entity described in this paragraph for the specific services to be performed.

Section 11. Issuance of Debt by County and/or Municipalities.

County Debt.

A. The Transportation Special Purpose Local Option Sales and Use Tax election ballot shall contain language required by the Act for the authorization of general obligation County debt in the principal amount of up to $130,000,000 (One Hundred Thirty Million Dollars).

B. The County may use the proceeds of its debt for the purpose of funding Major Projects or County Projects, paying capitalized interest (if any), and paying the cost of issuing its debt. The County acknowledges that it is solely responsible for the payment of its debt, including any and all costs, interest, and fees associated therewith.

C. The County's debt shall be paid first from the proceeds of its portion of the Transportation Special Purpose Local Option Sales and Use Tax or from the proceeds of the Transportation Special Purpose Local Option Sales and Use Tax which have been designated for Major Projects, with the exception of Major Projects which are designated in this Agreement to be administered by a specifically designated Municipality. In the event that there are insufficient Transportation Special Purpose Local Option Sales and Use Tax collections to pay the debt from its portion of the proceeds, the County shall pay any shortfall attributable to the debt from its general funds (the "Debt Service Payments"). The County covenants that, in order to make the Debt Service Payments when due from its general funds to the extent required, it will exercise its power of taxation to the extent necessary to timely pay any amounts required to be paid hereunder and it will make available and use for such payments all taxes levied and collected for that purpose together with funds from any other source. The County further covenants and agrees that in order to make funds available for such purpose, it will, in its general revenue, appropriation, and budgetary measures whereby its tax funds or revenues and the allocation thereof are controlled or provided for, include sums sufficient to timely satisfy such Debt Service Payments that may be required to be made from its general funds, whether or not any other sums are included in such measure, until all payments so required to be made shall have been made in full. The obligation of the County to make any payments that may be required to be made from its general funds shall constitute a general obligation of the County and a pledge of full faith and credit of the County to provide the funds required to timely fulfill any such obligation.

D. The obligation of the County to make Debt Service Payments and to perform and observe the other agreements on its part contained in this Section 11 shall be absolute and unconditional. Until such time as the principal of and interest on the debt shall have been paid in full or provision for the payment thereof shall have been made, the County (a) will

not suspend or discontinue any payments provided for herein, (b) will perform and observe all of its other agreements contained in this Agreement, and (c) will not terminate this Agreement for any cause, including, without limiting the generality of the foregoing, failure to complete any Project, a defect in any Project, or any failure of any other party to this Agreement to observe, whether express or implied, any duty, liability or obligation arising out of or connected with this Agreement.

E. The County will be responsible for all facets of the debt issuance and repayment process for its debt as stated herein. The County will select the underwriter, bond counsel and local counsel. The County will endeavor in good faith to be fiscally responsible in minimizing, to the extent possible, the costs and fees associated with the debt issuance process.

Braselton Debt.

F. The Transportation Special Purpose Local Option Sales and Use Tax election ballot shall contain language required by the Act for the authorization of general obligation Braselton debt in the principal amount of up to $3,500,000 (Three Million Five Hundred Thousand Dollars).

G. Braselton may use the proceeds of its debt for the purpose of funding Major Projects or Braselton Projects, paying capitalized interest (if any), and paying the cost of issuing its debt. Braselton acknowledges that it is solely responsible for the payment of its debt, including any and all costs, interest, and fees associated therewith.

H. Braselton's debt shall be paid first from the proceeds of its portion of the Transportation Special Purpose Local Option Sales and Use Tax or from the proceeds of the Transportation Special Purpose Local Option Sales and Use Tax which have been designated for Major Projects for which Braselton has been specifically designated as administrator within this Agreement. In the event that there are insufficient Transportation Special Purpose Local Option Sales and Use Tax collections to pay the debt from its portion of the proceeds, Braselton shall pay any shortfall attributable to the debt from its general funds (the "Debt Service Payments"). Braselton covenants that, in order to make the Debt Service Payments when due from its general funds to the extent required, it will exercise its power of taxation to the extent necessary to timely pay any amounts required to be paid hereunder and it will make available and use for such payments all taxes levied and collected for that purpose together with funds from any other source. Braselton further covenants and agrees that in order to make funds available for such purpose, it will, in its general revenue, appropriation, and budgetary measures whereby its tax funds or revenues and the allocation thereof are controlled or provided for, include sums sufficient to timely satisfy such Debt Service Payments that may be required to be made from its general funds, whether or not any other sums are included in such measure, until all payments so required to be made shall have been made in full. The obligation of Braselton to make any payments that may be required to be made from its general funds shall constitute a general obligation of Braselton and a pledge of full faith and credit of Braselton to provide the funds required to timely fulfill any such obligation.

I. The obligation of Braselton to make Debt Service Payments and to perform and observe the other agreements on its part contained in this Section 11 shall be absolute and unconditional. Until such time as the principal of and interest on the debt shall have been paid in full or provision for the payment thereof shall have been made, Braselton (a) will not suspend or discontinue any payments provided for herein, (b) will perform and observe all of its other agreements contained in this Agreement, and (c) will not terminate this Agreement for any cause, including, without limiting the generality of the foregoing, failure to complete any Project, a defect in any Project, or any failure of any other party to this Agreement to observe, whether express or implied, any duty, liability or obligation arising out of or connected with this Agreement.

J. Braselton will be responsible for all facets of the debt issuance and repayment process for its debt as stated herein. Braselton will select the underwriter, bond counsel and local counsel. Braselton will endeavor in good faith to be fiscally responsible in minimizing, to the extent possible, the costs and fees associated with the debt issuance process.

Flowery Branch Debt.

K. The Transportation Special Purpose Local Option Sales and Use Tax election ballot shall contain language required by the Act for the authorization of general obligation Flowery Branch debt in the principal amount of up to $5,000,000 (Five Million Dollars).

L. Flowery Branch may use the proceeds of its debt for the purpose of funding Flowery Branch Projects, paying capitalized interest (if any), and paying the cost of issuing its debt. Flowery Branch acknowledges that it is solely responsible for the payment of its debt, including any and all costs, interest, and fees associated therewith.

M. Flowery Branch's debt shall be paid first from the proceeds of its portion of the Transportation Special Purpose Local Option Sales and Use Tax. In the event that there are insufficient Transportation Special Purpose Local Option Sales and Use Tax collections to pay the debt from its portion of the proceeds, Flowery Branch shall pay any shortfall attributable to the debt from its general funds (the "Debt Service Payments"). Flowery Branch covenants that, in order to make the Debt Service Payments when due from its general funds to the extent required, it will exercise its power of taxation to the extent necessary to timely pay any amounts required to be paid hereunder and it will make available and use for such payments all taxes levied and collected for that purpose together with funds from any other source. Flowery Branch further covenants and agrees that in order to make funds available for such purpose, it will, in its general revenue, appropriation, and budgetary measures whereby its tax funds or revenues and the allocation thereof are controlled or provided for, include sums sufficient to timely satisfy such Debt Service Payments that may be required to be made from its general funds, whether or not any other sums are included in such measure, until all payments so required to be made shall have been made in full. The obligation of Flowery Branch to make any payments that may be required to be made from its general funds shall constitute a general obligation of Flowery Branch and a pledge of full faith and credit of Flowery Branch to provide the funds required to timely fulfill any such obligation.

N. The obligation of Flowery Branch to make Debt Service Payments and to perform and observe the other agreements on its part contained in this Section 11 shall be absolute and unconditional. Until such time as the principal of and interest on the debt shall have been paid in full or provision for the payment thereof shall have been made, Flowery Branch (a) will not suspend or discontinue any payments provided for herein, (b) will perform and observe all of its other agreements contained in this Agreement, and (c) will not terminate this Agreement for any cause, including, without limiting the generality of the foregoing, failure to complete any Project, a defect in any Project, or any failure of any other party to this Agreement to observe, whether express or implied, any duty, liability or obligation arising out of or connected with this Agreement.

O. Flowery Branch will be responsible for all facets of the debt issuance and repayment process for its debt as stated herein. Flowery Branch will select the underwriter, bond counsel and local counsel. Flowery Branch will endeavor in good faith to be fiscally responsible in minimizing, to the extent possible, the costs and fees associated with the debt issuance process.

Gainesville Debt.

P. The Transportation Special Purpose Local Option Sales and Use Tax election ballot shall contain language required by the Act for the authorization of general obligation Gainesville debt in the principal amount of up to $40,000,000 (Forty Million Dollars).

Q. Gainesville may use the proceeds of its debt for the purpose of funding Major Projects or Gainesville Projects, paying capitalized interest (if any), and paying the cost of issuing its debt. Gainesville acknowledges that it is solely responsible for the payment of its debt, including any and all costs, interest, and fees associated therewith.

R. Gainesville's debt shall be paid first from the proceeds of its portion of the Transportation Special Purpose Local Option Sales and Use Tax or from the proceeds of the Transportation Special Purpose Local Option Sales and Use Tax which have been designated for Major Projects for which Gainesville has been specifically designated as administrator within this Agreement. In the event that there are insufficient Transportation Special Purpose Local Option Sales and Use Tax collections to pay the debt from its portion of the proceeds, Gainesville shall pay any shortfall attributable to the debt from its general funds (the "Debt Service Payments"). Gainesville covenants that, in order to make the Debt Service Payments when due from its general funds to the extent required, it will exercise its power of taxation to the extent necessary to timely pay any amounts required to be paid hereunder and it will make available and use for such payments all taxes levied and collected for that purpose together with funds from any other source. Gainesville further covenants and agrees that in order to make funds available for such purpose, it will, in its general revenue, appropriation, and budgetary measures whereby its tax funds or revenues and the allocation thereof are controlled or provided for, include sums sufficient to timely satisfy such Debt Service Payments that may be required to be made from its general funds, whether or not any other sums are included in such measure, until all payments so required

to be made shall have been made in full. The obligation of Gainesville to make any payments that may be required to be made from its general funds shall constitute a general obligation of Gainesville and a pledge of full faith and credit of Gainesville to provide the funds required to timely fulfill any such obligation.

S. The obligation of Gainesville to make Debt Service Payments and to perform and observe the other agreements on its part contained in this Section 11 shall be absolute and unconditional. Until such time as the principal of and interest on the debt shall have been paid in full or provision for the payment thereof shall have been made, Gainesville (a) will not suspend or discontinue any payments provided for herein, (b) will perform and observe all of its other agreements contained in this Agreement, and (c) will not terminate this Agreement for any cause, including, without limiting the generality of the foregoing, failure to complete any Project, a defect in any Project, or any failure of any other party to this Agreement to observe, whether express or implied, any duty, liability or obligation arising out of or connected with this Agreement.

T. Gainesville will be responsible for all facets of the debt issuance and repayment process for its debt as stated herein. Gainesville will select the underwriter, bond counsel and local counsel. Gainesville will endeavor in good faith to be fiscally responsible in minimizing, to the extent possible, the costs and fees associated with the debt issuance process.

Oakwood Debt.

U. The Transportation Special Purpose Local Option Sales and Use Tax election ballot shall contain language required by the Act for the authorization of general obligation Oakwood debt in the principal amount of up to $1,000,000 (One Million Dollars).

V. Oakwood may use the proceeds of its debt for the purpose of funding Major Projects or Oakwood Projects, paying capitalized interest (if any), and paying the cost of issuing its debt. Oakwood acknowledges that it is solely responsible for the payment of its debt, including any and all costs, interest, and fees associated therewith.

W. Oakwood's debt shall be paid first from the proceeds of its portion of the Transportation Special Purpose Local Option Sales and Use Tax or from the proceeds of the Transportation Special Purpose Local Option Sales and Use Tax which have been designated for Major Projects for which Oakwood has been specifically designated as administrator within this Agreement. In the event that there are insufficient Transportation Special Purpose Local Option Sales and Use Tax collections to pay the debt from its portion of the proceeds, Oakwood shall pay any shortfall attributable to the debt from its general funds (the "Debt Service Payments"). Oakwood covenants that, in order to make the Debt Service Payments when due from its general funds to the extent required, it will exercise its power of taxation to the extent necessary to timely pay any amounts required to be paid hereunder and it will make available and use for such payments all taxes levied and collected for that purpose together with funds from any other source. Oakwood further covenants and agrees that in order to make funds available for such purpose, it will, in its general revenue, appropriation, and budgetary measures whereby its tax funds or revenues

and the allocation thereof are controlled or provided for, include sums sufficient to timely satisfy such Debt Service Payments that may be required to be made from its general funds, whether or not any other sums are included in such measure, until all payments so required to be made shall have been made in full. The obligation of Oakwood to make any payments that may be required to be made from its general funds shall constitute a general obligation of Oakwood and a pledge of full faith and credit of Oakwood to provide the funds required to timely fulfill any such obligation.

X. The obligation of Oakwood to make Debt Service Payments and to perform and observe the other agreements on its part contained in this Section 11 shall be absolute and unconditional. Until such time as the principal of and interest on the debt shall have been paid in full or provision for the payment thereof shall have been made, Oakwood (a) will not suspend or discontinue any payments provided for herein, (b) will perform and observe all of its other agreements contained in this Agreement, and (c) will not terminate this Agreement for any cause, including, without limiting the generality of the foregoing, failure to complete any Project, a defect in any Project, or any failure of any other party to this Agreement to observe, whether express or implied, any duty, liability or obligation arising out of or connected with this Agreement.

Y. Oakwood will be responsible for all facets of the debt issuance and repayment process for its debt as stated herein. Oakwood will select the underwriter, bond counsel and local counsel. Oakwood will endeavor in good faith to be fiscally responsible in minimizing, to the extent possible, the costs and fees associated with the debt issuance process.

Section 12. Citizen Review Committee.

A. The County and Municipalities agree that the members of the Citizen Review Committee, which is reviewing expenditures for SPLOST VII and SPLOST VIII Projects, shall also review the Projects and Purposes set forth in this Agreement.

B. The Citizen Review Committee will represent the interests of the citizens of the County and its Municipalities and shall receive and review periodic status reports concerning all Projects and Purposes to be funded from the net proceeds of the Transportation Special Purpose Local Option Sales and Use Tax Program. The Committee shall review Transportation Special Purpose Local Option Sales and Use Tax Projects and Purposes of the County and Municipalities and shall invite the necessary staff, division directors, department heads, administrators, and appropriate third parties to provide Project and Purpose updates to the Committee.

C. The mission of the Citizen Review Committee is to ensure all Hall County and Municipal Transportation Special Purpose Local Option Sales and Use Tax Program Purposes will be reported and executed in an efficient, transparent, and fully accountable manner in keeping with the purposes of the overall Transportation Special Purpose Local Option Sales and Use Tax Program.

D. Hall County will provide appropriate staff, technical advisors, and meeting facilities to support the Committee's activities.

E. The County Administrator and City Managers or designee(s), as applicable, of the County and Municipalities to this Agreement shall appoint any successor members of the Committee based on the following methodology:

1. The Citizen Review Committee is comprised of nine members, five members appointed by the County Administrator; two members appointed by the City Manager of the City of Gainesville; one member appointed by a majority of the City Managers or designees of Buford, Braselton, Flowery Branch, Oakwood and Rest Haven; and one member appointed by a majority of the City Managers or designees of Clermont, Gillsville, and Lula.

2. Each member shall serve a four (4) year term. Each committee member selected to serve shall be appointed, or reappointed, every four years by the County and Municipality officials.

3. No individual who holds state, county, or city elected office shall be eligible to serve as a member of the Citizen Review Committee during the term of such elected office, and the position of any member shall be deemed vacant upon such member qualifying as a candidate for elected public office. A member may be removed from the Citizen Review Committee with cause by the appointing official(s). Vacancies which may occur on the Committee shall be filled for the remainder of the unexpired term in the same manner as original appointments.

4. Citizen Review Committee members are expected to serve with integrity and shall adhere to the highest ethical standards. Members who miss two consecutive meetings without reasonable cause or whose annual attendance drops below 50% shall be deemed to have vacated their seat on the Committee.

Section 13. Default.

The failure of any party to perform its obligations under this Agreement shall constitute an event of default.

Section 14. Liability for Noncompliance.

The County and the Municipalities shall comply with all applicable local, state, and federal statutes, ordinances, rules and regulations. In the event that any Municipality fails to comply with the requirements of the Act (Official Code of Georgia Annotated § 48- 8-260 et seq.), the County shall not be held liable for such noncompliance. No consent or waiver, express or implied, by any party to this Agreement, to any breach of any covenant, condition or duty of another party shall be construed as a consent to, or waiver of, any future breach of the same.

Section 15. Counterparts.

This Agreement may be executed in several counterparts, each of which shall be deemed an original and all of which together shall constitute one and the same instrument.

Section 16. Governing Law.

This Agreement and all transactions contemplated hereby shall be governed by, and construed and enforced in accordance with, the laws of the State of Georgia.

Section 17. Severability.

Should any provision of this Agreement or application thereof to any person or circumstance be held invalid or unenforceable, the remainder of this Agreement or the application of such provision to any person or circumstance, other than those to which it is held invalid or unenforceable, shall not be affected thereby, and each provision of this Agreement shall be valid and enforceable to the full extent permitted by law.

Section 18. Entire Agreement.

This Agreement embodies and sets forth all the provisions and understandings between the parties relative to the Purposes and Projects. There are no provisions, agreements, understandings, representations, or inducements, either oral or written, between the parties other than those hereinabove set forth. Any and all prior provisions, agreements, contracts or understandings, either oral or written, between the parties relative to the Purposes and Projects are hereby rescinded and superseded by this Agreement.

Section 19. Amendments.

This Agreement shall not be amended or modified except by agreement in writing executed by the governing authorities of the County and all of the Municipalities.

Section 20. Notices.

All notices, demands or requests required or permitted to be given pursuant to this Agreement shall be in writing and shall be deemed to have been properly given or served and shall be effective three days after having been deposited or placed in the United States mail, postage prepaid to the addresses appearing below, or when delivered by hand to the addresses indicated below:

A. Town of Braselton
PO Box 306
4982 Highway 53
Braselton, Georgia 30517
Attention: Town Manager

B. City of Buford
2300 Buford Highway
Buford, Georgia 30518
Attention: City Manager

C. Town of Clermont
109 King St.
Clermont, Georgia 30527
Attention: Town Clerk

D. City of Flowery Branch
P.O. Box 757
5410 Pine Street
Flowery Branch, Georgia 30542
Attention: City Manager

E. City of Gainesville
P.O. Box 2496
300 Henry Ward Way
Gainesville, Georgia 30503
Attention: City Manager

F. City of Gillsville
P.O. Box 25
6288 GA-52
Gillsville, Georgia 30543-0025
Attention: City Clerk

G. City of Lula
6055 Main St.
Lula, Georgia 30554
Attention: Mayor

H. City of Oakwood
P.O. Box 99
4035 Walnut Street
Oakwood, Georgia 30566
Attention: City Manager

I. City of Rest Haven
428 Thunder Road
Buford, Georgia 30518
Attention: City Clerk

J. Hall County
P.O. Box 1435
2875 Browns Bridge Road
Gainesville, Georgia 30503
Attention: County Administrator

Section 21. Public Facilities.

The County and Municipalities agree that each approved Transportation Special Purpose Local Option Sales and Use Tax Project associated with this Agreement shall be maintained as a public facility and in public ownership.

Section 22. Mediation.

The County and the Municipalities agree to submit any controversy arising under this Agreement to mediation as a part of the dispute resolution process. The parties to the mediation shall mutually select a neutral party to serve as mediator. Costs of mediation shall be shared equally among the parties to the mediation.

IN WITNESS WHEREOF, all parties have executed this Agreement on the date indicated herein.

SIGNATURES ON THE FOLLOWING THREE PAGES

HALL COUNTY, GEORGIA

By: _____
Richard Higgins, Chairman, Board of Commissioners

Attest:

_____ _____
Jennifer Rivera, Clerk Date

Approved as to Form:

_____
William J. Linkous, III, County Attorney

TOWN OF BRASELTON

By: _____
Honorable Kurt Ward, Mayor

Attest:

_____ 6-15-2023
Jennifer Scott, City Clerk Date

Approved as to Form:

_____
Gregory Jay, Town Attorney

CITY OF BUFORD

By: _____
Honorable Phillip Beard, Chairman, Buford City Commission

Attest:

_____ _____
Kim Wolfe, City Clerk Date

Approved as to Form:

_____
Gregory Jay, City Attorney

TOWN OF CLERMONT

By: _____
Honorable James E. Nix, Mayor

Attest:

_____ 6/15/23
Amy Lomax, City Clerk Date

Approved as to Form:

_____
David Syfan, City Attorney

CITY OF FLOWERY BRANCH

By: Edward R. Asbridge
Honorable Ed Asbridge, Mayor

Attest:
Shelia R Cooper
Shelia Cooper, City Clerk

6/20/2023
Date

Approved as to Form:
Karen G. Thomas, City Attorney

CITY OF GAINESVILLE

By: W. Sam Couvillon
Honorable W. Sam Couvillon, Mayor

Attest:
Denise O. Jordan
Denise O. Jordan, City Clerk

6/20/2023
Date

Approved as to Form:
Abbott S. Hayes, Jr., City Attorney

CITY OF GILLSVILLE

By: S. Wade Dale
Honorable Wade Dale, Mayor

Attest:
Sandra Helton
Sandra Helton, City Clerk

6/19/23
Date

Approved as to Form:
David Syfan, City Attorney

CITY OF LULA

By: _____
Honorable Joe Thomas, Mayor

Attest:

Tangee B. Puckett
Tangee Puckett, City Clerk

6/28/23
Date

Approved as to Form:

_____
Joey Homans, City Attorney

CITY OF OAKWOOD

By: _____
Honorable Lamar Scroggs, Mayor

Attest:

_____
Mai Chang, City Clerk

6/26/23
Date

Approved as to Form:

_____
Donald Hunt, City Attorney

CITY OF REST HAVEN

By: _____
Honorable Kenneth Waycaster, Mayor

Attest:

_____
Monica Montgomery, City Clerk

_____
Date

Approved as to Form:

_____
Gregory Jay, City Attorney

EXHIBIT A

TSPLOST Projects		
Description		Amount
Total Estimated Collections		**$ 325,000,000**
Purposes - Construction of roads, bridges, sidewalks, multiuse paths, intersection improvements, traffic safety enhancements, and stormwater projects pertaining to roadway and other transportation projects.		
Major Projects (80% bucket)		
Spout Springs Road Widening Phase II	County	$ 40,000,000
McEver Road Widening Phase I	County	58,000,000
Ridge Road Corridor Improvements	Gainesville	40,000,000
Park Hill Drive Intersection Improvements	Gainesville	11,000,000
Hilton Drive Extension	Gainesville	26,000,000
McEver Road Intersection Improvements	County	12,500,000
SR 365 Safety Improvements	County	20,000,000
SR 369/Browns Bridge Road Corridor Improvements/Widening	County	35,846,000
Little Five Points Intersection	County	2,500,000
Mt Vernon Road and Rilla Road Intersection	County	3,000,000
Mt Vernon Road and Jim Hood Road Intersection	County	2,500,000
Memorial Park Drive and Atlanta Highway Intersection	County	4,000,000
Old Oakwood Road at Balus Creek Road Culvert Replacement and Road Alignment	Oakwood	1,300,000
Main Street, Flat Creek Road and Old Oakwood Road Intersection Improvements	Oakwood	850,000
Frazer Road Corridor Improvements	Buford	1,504,000
Thompson Mill Road Improvements	Braselton	1,000,000
Total Estimated Cost Major Transportation Projects	**80%**	**$ 260,000,000**

Distribution to Jurisdictions, Local Projects (20% bucket)		
Purposes described by each jurisdiction below.		
Hall County Portion	**42.5000%**	**$27,625,000**
Municipality Portion	**57.5000%**	**$37,375,000**
Unincorporated Hall County	42.5000%	$27,625,000
Municipality Breakdown		
Braselton	3.9981%	2,598,748
Flowery Branch	9.7953%	6,366,932
Gainesville	29.9856%	19,490,609
Buford	3.3984%	2,208,936
Gillsville	0.4998%	324,843
Clermont	1.3993%	909,562
Oakwood	5.3974%	3,508,310
Lula	2.9986%	1,949,061
Rest Haven	0.0277%	18,000
		$ 37,375,000
Total Estimated Distributions To Jurisdictions, Local Projects	**20%**	**$ 65,000,000**
Total Estimated Cost of T-SPLOST Projects		**$ 325,000,000**

Hall County Project List

Project Name/Description	Estimated Project Cost
Construction of roads, bridges, sidewalks, multiuse paths, intersection improvements, traffic safety enhancements, and stormwater projects pertaining to roadway and other transportation projects.	
Projects may include: Hog Mountain Road corridor improvements/widening; improving sight distance issues at East Hall Road and Gaines Mill Road, and Hog Mountain and Blackjack Road; 2 foot paved shoulder widening with RPMs and signage upgrades on Williams Road, County Line Road, Gaines Mill Road, Harmony Church Road, Blackjack Road, Bark Camp Road, and Hubert Stephens Road; intersection improvements at Old Cornelia Highway and Joe Chandler Road, Hog Mountain Road and Wade Orr Road, Hog Mountain Road and Capitola Farm Road, and Union Church Road and Elizabeth Lane; signage replacement/upgrades on Chestatee Road and Cool Springs Road; and other related projects.	$17,625,000
Resurfacing, including full depth reclamation, base and paving, culvert repair, traffic markers, patching, shoulder preparation, and related projects.	
Projects may include: resurfacing of approximately 25 miles of Hall County maintained roads based on the established annual road rating criteria and scoring system; and other related projects.	$10,000,000
Total Estimated Cost of Hall County Projects	**$27,625,000**

Municipalities Project List

Braselton

Project Name/Description	Estimated Project Cost
Construction of roads, bridges, sidewalks, multiuse paths, intersection improvements, traffic safety enhancements, and stormwater projects pertaining to roadway and other transportation projects.	$2,300,000
Projects may include: Highway 211, Highway 347, Thompson Mill Road, Spout Springs Road, Dunbar Road, and other related projects.	
Resurfacing, including full depth reclamation, base and paving, culvert repair, traffic markers, patching, shoulder preparation, and related projects.	$298,748
Projects may include: resurfacing of approximately 2 miles of Braselton maintained roads based on the established annual road rating criteria and scoring system; and other related projects.	
Total Estimated Cost of Braselton Projects	**$2,598,748**

Buford

Project Name/Description	Estimated Project Cost
Resurfacing, which may include full depth reclamation, base and paving, culvert repair, traffic markers, patching, sidewalks, shoulder preparation; Construction of roads, stormwater projects pertaining to roadway and other transportation and related projects. Projects may include: McEver Road/Peachtree Industrial Blvd., Holiday Road, Carter Road, B.U. Bowman Drive, Golden Parkway, Bristol Industrial Way, BelleWood Court, Palmero Court, Lexie Lane, South Waterworks Road, Green Road, Cemetery Road, New Bethany Road, North Waterworks Road, Big Creek Road, Lee Drive, Shoreland Drive, Hutchins Drive, Blackberry Lane, Maple Avenue, Frazer Road and other related projects.	$2,208,936
Total Estimated Cost of Buford Projects	**$2,208,936**

Clermont

Project Name/Description	Estimated Project Cost
Construction of roads, sidewalks, and stormwater projects pertaining to roadway and other transportation projects	$710,000
Projects may include widening, repair and resurfacing of Oxford Road; sidewalk construction; stormwater projects on King Street and Main Street; and other projects.	
Resurfacing, patching and related projects.	$199,562
Project may include the repair and resurfacing of various streets in the Town.	
Total Estimated Cost of Clermont Projects	**$909,562**

Flowery Branch

Project Name/Description	Estimated Project Cost
Construction of roads, bridges, sidewalks, multiuse paths, pedestrian upgrades (and related amenities), intersection improvements, turning lanes, traffic lights, traffic safety enhancements, and stormwater projects pertaining to roadway and other transportation projects.	
Projects may include: Intersections at Phil Niekro Blvd – Mulberry Street, Radford Road – McEver Road, Radford Road – Atlanta Highway. Sidewalks – Phil Niekro Blvd, Mitchell Street, East Main Street, downtown streets, Capitola Farm Road.	$2,000,000
Resurfacing, including full depth reclamation, base and paving, culvert repair, traffic markers, patching, shoulder preparation, sidewalks, multiuse paths, pedestrian upgrades (and related amenities) and similar projects.	$4,366,932
Projects may include: Portions of Phil Niekro, Lake Crossing Blvd, Mitchell Street (Phase 2), East Main, downtown roads, Capitola Road.	
Total Estimated Cost of Flowery Branch Projects	**$6,366,932**

Gainesville

Project Name/Description	Estimated Project Cost
Construction of roads, bridges, sidewalks, multiuse paths, pedestrian upgrades (and related amenities), intersection improvements, turning lanes, traffic lights, traffic safety enhancements, and stormwater projects pertaining to roadway and other transportation projects.	
Projects may include: Memorial Park Drive, Old Flowery Branch Road, Green Hill Circle, West End Avenue, Green Street, Riverside Drive, Enota Drive, Beverly Road, M.L.K. Jr Blvd, Pearl Nix Pkwy, Sky View Drive, Fullenwider Road, Athens Street, White Sulphur Road, Community Way, Spring Street, Atlanta Hwy, Shallowford Road, Gaines Mill Road, Smallwood Road, Aviation Blvd, Marler Street, Academy Street, East Ave, Limestone Pkwy, Old Cornelia Hwy, Park Hill Drive, Thompson Bridge Road, Browns Bridge Road, Jesse Jewell Pkwy; and other similar projects.	$14,490,608
Resurfacing, including full depth reclamation, base and paving, culvert repair, traffic markers, patching, shoulder preparation, sidewalks, multiuse paths, pedestrian upgrades (and related amenities) and similar projects.	$5,000,000
Projects may include: resurfacing of approximately 20 miles of City of Gainesville maintained roads based on the established annual road rating criteria and scoring system; and other similar projects.	
Total Estimated Cost of Gainesville Projects	**$19,490,608**

Gillsville

Project Name/Description	Estimated Project Cost
Construction of roads, bridges, sidewalks, multiuse paths, pedestrian upgrades (and related amenities), intersection improvements, turning lanes, traffic lights, traffic safety enhancements, and stormwater projects pertaining to roadway and other transportation projects. Projects may include: Extension of Wilson Dr. Sidewalks from Downtown to the Park, New Parking Lot for Downtown Park	$210,000
Resurfacing, including full depth reclamation, base and paving, culvert repair, traffic markers, patching, shoulder preparation, sidewalks, multiuse paths, pedestrian upgrades (and related amenities) and similar projects. Projects may include -Resurface of Old Town Parking Lot & Driveway, Widening of Church St. and School St.	$114,843
Total Estimated Cost of Gillsville Projects	**$324, 843**

Lula

Lula Project Name/Description	Estimated Project Cost
Construction of roads, bridges, sidewalks, multiuse paths, intersection improvements, traffic safety enhancements, and stormwater projects pertaining to roadway and other transportation projects.	$349,061
Projects may include any of the 82 roads recognized as within the city and maintained by the city as prioritized by the City Council, and or other related projects.	
Resurfacing, including full depth reclamation, base and paving, culvert repair, traffic markers, patching, shoulder preparation, and related projects.	$1.600,000
Projects may include: resurfacing of approximately 4 miles of city maintained roads based on the established annual road rating criteria and scoring system; and other related projects.	
Total Estimated Cost of Lula Projects	**$1,949,061**

Oakwood

Project Name/Description	Estimated Project Cost
Construction of roads, bridges, sidewalks, multiuse paths, intersection improvements, traffic safety enhancements, and stormwater projects pertaining to roadway and other transportation projects.	
Projects may include: Installation of sidewalks, sidewalk improvements, sidewalk repair, including curb and gutter installation and repair, on Main Street, Railroad Street, Oakwood Road, Flat Creek Road, Bishops Lane, Fairfax Drive, Fullerton Drive, Rutledge Drive, Nellie Drive; Highlands to Island Spur connections; Railroad Crossing safety improvements and intersection improvements at Railroad Street, Main Street, Walnut Circle; Intersection improvements at W. White and H. F Reed Industrial Parkway; Oak Street widening and improvements; and other related projects.	$3,272,000
Resurfacing, including full depth reclamation, base and paving, culvert repair, traffic markers, patching, shoulder preparation, and related projects.	$236,310
Projects may include: Full Depth Reclamation of Nellie Drive, Culvert repair and replacement on annual projects list; and other related projects.	
Total Estimated Cost of Oakwood Projects	**$3,508,310**

Rest Haven

Project Name/Description	Estimated Project Cost
Resurfacing, which may include full depth reclamation, base and paving, culvert repair, traffic markers, patching, sidewalks, shoulder preparation; Construction of roads, stormwater projects pertaining to roadway and other transportation and related projects. Projects may include: Thunder Road, Ledford Road.	$18,000
Total Estimated Cost of Rest Haven Projects	**$18,000**

AGENDA ITEM

Consent Agenda

REPORT TO: **Work Session (07/10/23)**

REPORT TO: **Voting Meeting (07/13/23)**

ITEM NO: 390/2023

SUBJECT: Approve the FY 2024 Gainesville-Hall County Economic Development Council Service Contract between Hall County and the Greater Hall Chamber of Commerce in the amount of $185,000.00.

Meetings:

Work Session Date: 07/10/23

Voting Meeting Date: 07/13/23

Executive Summary:

Presenter: WG

Recommendation:
Approve.

Purpose of Request:

Approve the FY 2024 Gainesville-Hall County Economic Development Council Service Contract between Hall County and the Greater Hall Chamber of Commerce in the amount of $185,000.00.

History:
The Gainesville-Hall County Economic Development Council is a committee of the Greater Hall Chamber of Commerce and exists to develop and promote programs that will assist existing business and industry with their future expansion needs, as well as solicit quality new business and industry to our community.

Facts and Issues:
Each year, the Gainesville-Hall County Economic Development Council submits a budget request to the budget committee as part of the annual budget process. The amount outlined in the agreement has been approved as part of the FY 2024 budget, which was approved on June 21, 2023. This agreement outlines the terms and services associated the the FY 2024 approved appropriations.

Options:

Funding Requested	$ 185,000.00
Are funds within current budget?	Yes
Source of Funds	General Fund
Does the action involve a Resolution, Ordinance, Contract, Agreement, etc.?	Yes

Has it been reviewed by the County Attorney? Yes
Is there a deadline for this item?

Approvals:

Submit	Budget	Finance	Attorney
JR	TS	WG	VS
Administration		**Clerk**	
CR		JR	

Attachments:

Financial Supplement
FY 2024 EDC Contract

HALL COUNTY BOARD OF COMMISSIONERS
FINANCIAL SUPPLEMENT REPORT

AGENDA ITEM 390/2023

Funds Requested: $ 185,000.00

Request Budgeted: Yes

Proposed Source of Funding:

General Fund

Budget Transfer Requested:

No

Funding Source Items:

Fiscal Year	Fund	Division	Account	Amount
2024	100-GENERAL FUND	7900 - AGENCIES	572011-CHAMBER OF COMMERCE	$185,000.00

Budget Transfer Items:

Additional Information/Comments:

Contact for Questions: WG

Phone: 770-535-8270

GAINESVILLE-HALL COUNTY
ECONOMIC DEVELOPMENT COUNCIL
SERVICE CONTRACT

HALL COUNTY, GEORGIA,

THIS AGREEMENT, made and entered into this 26th of June, 2023 by and between **Hall County, Georgia** (hereinafter referred to as the "County"), party of the first part and the **Greater Hall Chamber of Commerce Inc.** (hereinafter referred to as the "Chamber") party of the second part,

WHEREAS, O.C.G.A. Section 36-60-14 grants the authority to the governing body of each municipal corporation of the State of Georgia to enter into contracts with private, non-profit organizations to identify, attract and locate new business and industry into the municipality for the purpose of increasing trade, industry and commerce; and

WHEREAS, the County has agreed to contract with the Chamber for economic development services through the Gainesville-Hall County Economic Development Council, a committee of the Chamber, (hereinafter referred to as the "EDC"); and

WHEREAS, the Chamber and the County have agreed to form an equal partnership for the purposes of marketing and promoting quality economic development for the Gainesville-Hall County community; and

WHEREAS, the parties hereto are committed to a strong and viable economic development program; and

NOW THEREFORE, for and in consideration of the mutual covenants and promises between the parties hereto, it is hereby agreed as follows:

1. The County shall provide a partner funding fee in the sum of **$185,000.00** to the Chamber as appropriated by the County Commission, for the purposes set forth in this contract.

2. The Chamber (by and through the EDC) shall:

   A. Provide economic development services for the County, including marketing and promoting quality economic development in the name of all funding partners and advertising in Chamber publications such as the chamber magazine, Atlanta Business Chronicle and Georgia Trend as part of the funding partner fee. These efforts shall include, but not be limited to, retail marketing on a macro level for all funding partners in Hall County, with an emphasis on developers and shopping center/corridor development, negotiation and proposal writing on competitive projects and coordination of state and local resources to close remaining gaps in the decision.

   B. Provide support to attract and recruit new business and industry to the County by marketing the existing office, industrial, retail building and site inventory through the Greater Hall Chamber of Commerce website, and facilitating industrial, office and retail development site/community visits and responses to RFI's in the initial stages of the information gathering process;

   C. Provide support to existing business and industry for both expansion and growth opportunities through routine staff calls and the existing industry programs including, but not

limited to, the Industry Roundtable, HR Council Safety Council, the Existing Industry Awards, the Industry Directory and the Wage & Benefit Survey; and South Hall Business Coalition.

D. Market the community through the distribution of information concerning Greater Hall County including, but not limited to, coordinating commercial broker meetings with Hall County real estate professionals, maintaining a unified point of contact with statewide developers, site location consultants, developers and commercial brokers and by coordinating Small Business Workshops, and Small Business Council meetings.

E. Encourage broad-based support from the community toward quality economic growth and development.

F. Include tourism in the Economic Development Strategy by coordinating with and working jointly with the Gainesville Communication and Tourism Department and the Lake Lanier Convention and Visitors Bureau.

G. Attend Hall County Commission meetings to report accomplishments via the provision of detailed, written activity/performance reports.

H. Advise the EDC Executive Committee in the hiring of the Economic Development Vice President.

I. Advocate for State and local economic development legislative and referendum initiatives that are endorsed by the EDC Executive Committee.

J. Work with funding partners to develop a comprehensive county-wide economic development plan and implementation strategy.

3. Financial Provisions

A. Funding shall be provided by the County to the Chamber on a fiscal year basis with the year beginning on July 1 and ending on the following June 30. (County will be credited for any previous payments.)

B. The Chamber shall prepare an annual budget of all estimated revenue (including any fund balance carryovers in excess of 30 days working capital) and all proposed expenditures. Included with, and as a part of the budget proposal shall be appropriate information regarding mission statement, goals and objectives, performance indicators and/or such other information as shall be reasonably requested by the County. The budget shall be inclusive of all funding sources-and shall be balanced with respect to revenues and expenditures. The budget shall provide a breakdown of each revenue source and expenditure and shall be subject to the review and approval of the County. Once approved, any adjustments to the annual budget shall likewise be subject to the review and approval of the County. Each budget and any adjustments thereto shall provide for an accounting for all funds contributed by the funding partners and verify the use of funding partner contributions exclusively for the EDC and its functions.

C. The budget shall include requests for major equipment, furniture, fixtures, or improvements purchased with funds provided by the County. The Chamber shall maintain fixed assets records which shall include at a minimum a listing of fixed assets, date acquired, vendor and cost. If the EDC ceases to exist, then such fixed assets shall become the property of the City of Oakwood, the City of Flowery Branch, the City of Lula, the City of Gainesville, Hall County and the Chamber proportionate to their total payments to the EDC as of the date of its or its successor's cessation of existence.

D. The Chamber shall submit a financial and performance report to the County at each EDC meeting. This report shall include a balance sheet, all fiscal year revenues, and expenditures to date and a comparison of actual revenue and expenditures to the budget.

E. At the conclusion of each fiscal year, the Chamber shall have prepared, at its own expense, an audit by a reputable Certified Public Accounting firm. Such audit shall be prepared in compliance with generally accepted accounting principles. Such audit shall be completed within 90 days after the end of the fiscal year, and one copy of the audit and management letter shall be immediately sent to all the funding partners.

F. The County shall make monthly payments to the Chamber in advance but not before the first day of the calendar month for which designated.

G. The County pledges to cooperate to the fullest extent possible with the Chamber in its efforts to market and promote quality economic development.

4. If the Chamber fails to make a reasonable effort to fulfill its obligations under this agreement or fails to retain competent staff to carry out its responsibilities hereunder, then the County at its option may terminate payment pursuant to this agreement after giving 30 days written notice to the Chamber.

5. Notice under this agreement may be given by delivering it in person or by depositing it in the United States mail, postage prepaid, addressed to:

County Administrator
Hall County
P.O. Box 1435
Gainesville, GA 30503

And, in case of the Chamber to:

Greater Hall Chamber of Commerce
P.O. Box 374
Gainesville, Georgia 30503-0374

GAINESVILLE-HALL COUNTY
ECONOMIC DEVELOPMENT COUNCIL
SERVICE CONTRACT

6. The waiver by any party to this contract of a breach of any provision of this contract shall not be deemed a continuing waiver or a waiver of a subsequent breach whether of the same or another provision of this contract.

7. This agreement is for a period of one year and shall expire on the 30th day of June 2024 provided, however, it may be extended in writing by agreement of the parties provided the County Commission appropriates funding for the following fiscal year. There shall be no renewal or extension by law without express agreement as provided herein.

IN **WITNESS WHEREOF,** the parties hereto have set their hands and seals, this day and year first above written.

HALL COUNTY, GEORGIA

APPROVED TO FORM

_____

ATTEST

_____

GREATER HALL CHAMBER OF COMMERCE, INC

6/26/23

Kathryn Dunlap
President & CEO

ATTEST

Gerri R Collins

Gerri Collins
Executive Assistant

GERRI R COLLINS NOTARY PUBLIC COMMISSION EXPIRES Oct. 9, 2023 HALL COUNTY GA

AGENDA ITEM

Consent Agenda

REPORT TO: **Work Session (07/10/23)**

REPORT TO: **Voting Meeting (07/13/23)**

ITEM NO: 365/2023

SUBJECT: Approve the adoption of the Tax Levy Resolution for the Hall County School District for FY 2024.

Meetings:

Work Session Date: 07/10/23 **Voting Meeting Date:** 07/13/23

Executive Summary:

Presenter: WG

Recommendation:
Approve.

Purpose of Request:

Approve the adoption of the Tax Levy Resolution for the Hall County School District for FY 2024.

History:
This tax levy resolution is approved every year as part of the budget process so the Tax Commissioner can levy the appropriate property taxes for the Hall County School District.

Facts and Issues:

Options:

Funding Requested	$ 0.00
Are funds within current budget?	No
Source of Funds	
Does the action involve a Resolution, Ordinance, Contract, Agreement, etc.?	Yes
Has it been reviewed by the County Attorney?	Yes
Is there a deadline for this item?	2023-07-13

Approvals:

Submit	Budget	Finance	Attorney
TS	TS	WG	WLI
Administration		**Clerk**	
CR		JR	

Attachments:

Millage Resolution - Board of Education
County Millage Rate Certification

TAX RESOLUTION
TAX LEVY FOR
HALL COUNTY SCHOOL DISTRICT
2023

BE IT RESOLVED BY THE BOARD OF COMMISSIONERS OF HALL COUNTY, GEORGIA, and it is hereby ordered by same that, upon the recommendation of the Hall County Board of Education, for educational purposes for 2023, there is hereby levied on taxable property located in said Hall County, outside of independent school districts, as provided on Article VIII of the Constitution of Georgia as amended:

		NET MILLAGE	
ITEM	PER $1,000	PER $100	TO YIELD
To pay expenses of administration, maintenance, and operation of Hall County School System, as provided by law, based on a valuation of 9,194,185,567	15.640	1.564	$143,797,062
To pay interest and principal on outstanding school bonded indebtedness of Hall County School System, as provided by law, based on a valuation of 9,235,451,567	1.000	.1000	$ 9,235,452

This _____ day of _____ , 2023.

HALL COUNTY BOARD OF COMMISSIONERS

By _____
Chairman

_____
Commissioner – District 1

_____
Commissioner – District 2

_____
Commissioner - District 3

_____
Commissioner – District 4

_____
Commission Clerk

PT-35 (Rev 01/23)

COUNTY MILLAGE RATE CERTIFICATION FOR TAX YEAR 2023

Please provide a copy of this form to your county's Clerk of Superior Court.

http://www.dor.ga.gov

COUNTY: ___HALL_____

Submit original signed copy with digest submission

COLUMN 1	COLUMN 2	COLUMN 3		COLUMN 4	COLUMN 5	COLUMN 6	COLUMN 7	COLUMN 8	COLUMN 9	COLUMN 10
District Number Must be Shown	District Name (Inc, Uninc, School, Special Districts, Etc.)	Mark X if District Falls In Unincorporated Area	Mark X if District Falls In Incorporated Area	Enter Gross Millage Rate Before Rollbacks	Sales Tax Rollback O.C.G.A § 48-8-91	Insurance Premium Rollback O.C.G.A § 33-8-8.3		Net M&O Millage Rate Column 4 less Columns 5, 6 & 7	Enter Bond Millage Rate	Total Millage Rate Column 8 plus Column 9
All	County M&O	X	X	6.009	2.569			3.440	0.000	3.440
1,2,3,5,6,7,15 ,16,21,22	**School**	X	X	15.640	0.000			15.640	1.000	16.640
	List Special Service Districts:									
1	Fire Unincorporated	X		3.887		1.237		2.650	0.000	2.650
								0.000	0.000	0.000
2,3,5,6,7,8,15 ,16,21,22	Fire Incorporated		X	4.080				4.080	0.000	4.080
								0.000	0.000	0.000
All	Emergency Services	X	X	0.571				0.571	0.000	0.571
								0.000	0.000	0.000
1	Development Services	X		1.005				1.005	0.000	1.005
								0.000	0.000	0.000
1,2,3,5,6,7,8, 15,16,21,22	Parks and Leisure Services	X	X	0.364				0.364	0.000	0.364
								0.000	0.000	0.000
								0.000	0.000	0.000
	CID/BID:									
								0.000		0.000
								0.000		0.000
								0.000		0.000
								0.000		0.000

I hereby certify that the rates listed above are the official rates for the Districts indicated for Tax Year 2023

_____ _____

Date **Chairman, Board of County Commissioners**

AGENDA ITEM

Consent Agenda

REPORT TO: **Work Session (07/10/23)**

REPORT TO: **Voting Meeting (07/13/23)**

ITEM NO: 362/2023

SUBJECT: Approve the award of IFB #056-43 General Contractor for Hire for the construction of a new gymnasium for Boys & Girls Club of Lanier to Pencor, LLC of Alpharetta, GA, in the amount of $2,474,740.00. This award is funded by the Community Development Block Grant (CDBG) with no financial obligation to Hall County.

Meetings:

Work Session Date: 07/10/23

Voting Meeting Date: 07/13/23

Executive Summary:

Presenter: WG

Recommendation:
Approve award to Pencor, LLC of Alpharetta, GA.

Purpose of Request:
Approve the award of IFB #056-43 General Contractor for Hire for the construction of a new gymnasium for Boys & Girls Club of Lanier to Pencor, LLC of Alpharetta, GA, in the amount of $2,474,740.00. This award is funded by the Community Development Block Grant (CDBG) with no financial obligation to Hall County.

History:
The Board approved the Community Development Block Grant (CDBG) for Finance/Grants Division on Voting Meeting 2021-01-28 Consent Agenda Item #175/2020. This award for construction stems from the application and acceptance for the CDBG grant on behalf of the Boys & Girls Clubs of Lanier.

Facts and Issues:

Options:

Construct a gymnasium to be located at the Joseph F. Walters Boys & Girls Clubs of Lanier facility located on Memorial Drive, Gainesville, Georgia. The gym will serve low income youths ages 5-18. The youth will benefit from health and education programing for afterschool and summer months activities. All costs above the grant amount and any match associated with the grant will be the responsibility of the Boys & Girls Clubs of Lanier. The Boys & Girls Clubs of Lanier are responsible for all costs associated with planning, designing, and supervising the construction of the gym.

Award is based upon the competively bid ITB #056-43 with Pencor, LLC being the lowest cost, responsible and responsive bidder. The contractor agrees to construct the new gymnasium for the Guaranteed Maximum Price of $2,474,740.00.

Funding Requested	$ 0.00
Are funds within current budget?	Yes
Source of Funds	CDBG Pass-Thru Grant
Does the action involve a Resolution, Ordinance, Contract, Agreement, etc.?	Yes
Has it been reviewed by the County Attorney?	Yes
Is there a deadline for this item?	2023-07-03

Approvals:

Buyer	Submit	Purchasing	Budget
AP	TS	AP	TS
Finance	**Attorney**	**Administration**	**Clerk**
WG	VS	CR	JR

Attachments:

Contract
Bid Tabulation Summary

HALL COUNTY BOARD OF COMMISSIONERS
FINANCIAL SUPPLEMENT REPORT

AGENDA ITEM 362/2023

Funds Requested: $ 0.00

Request Budgeted: Yes

Proposed Source of Funding:

CDBG Pass-Thru Grant

Budget Transfer Requested:

No

Funding Source Items:

Fiscal Year	Fund	Division	Account	Amount
2024	250-MULTIPLE GRANT FUND	5591-CDBG	572001-AGENCY ALLOCATIONS	$2,474,740.00
2024	250-MULTIPLE GRANT FUND	5591-CDBG	331150-FEDERALâ€OPERATING INDIRECT	$-2,474,740.00

Budget Transfer Items:

Additional Information/Comments:

Contact for Questions: AP

Phone: 770-531-4939

HALL COUNTY
GEORGIA
*We have it **all** in Hall*

POST OFFICE DRAWER 1435
GAINESVILLE, GA 30503

t: 770.535.8270 | f: 770.531.6711

DIRECTOR
Wesley Geddings

Hall County Government
FINANCIAL SERVICES

STATE OF GEORGIA
COUNTY OF HALL

CONTRACT #056-43

For the provision of

GENERAL CONTRACTOR FOR HIRE
For the Construction of a New Gymnasium

ARTICLE #101 - INTRODUCTION

General Contractor for Hire (herein "Contractor") for the construction of a new multipurpose gymnasium adjacent to the Boys & Girls Clubs of Lanier's Joseph F. Walters Club, (herein "Project") located at 2094 Memorial Park Dr, Gainesville, GA (hereinafter "Services" and "Project") as entered into on _____ and with an Effective Date of _____, is by and between; Hall County, Georgia (hereinafter "County") located at 2875 Browns Bridge Rd, Gainesville, Georgia 30504, and Pencor, LLC, of 12150 Morris Rd., Alpharetta, GA (hereinafter "Contractor"). Contractor is an entity that is legally registered and qualified, and holding any such licenses and certifications as may be required to render Services to do business in the State of Georgia. County and Contractor are known individually as a "Party" and collectively as the "Parties".

Whereas, the parties do mutually desire to enter into this Contract to document the provision of Services or other valuable consideration by the Contractor to the County in exchange for payment as compensation.

This Contract is the result of the competitively bid ITB #056-43, the Bidder's bid response, the Scope of Work, Exhibits, Attachments, and references are all incorporated herein by reference. Therefore, in consideration of the terms, conditions, and mutual promises contained herein, expressed by a valid offer and acceptance, the receipt and sufficiency of which both parties hereby acknowledge, the parties hereto agree as follows:

ARTICLE #102 – CONTRACT

A. Contractor agrees to provide the Services to the County as detailed herein as the **Scope of Work**, and for locations and services as described in the ITB #056-43 and the bidder's response.

   Services include the construction of a new gymnasium according to the provided construction documents with no variation.

B. COMPENSATION: County hereby agrees as good and valuable compensation as provided in the attached bidder's response entitled **Exhibit C – Mandatory Cost Proposal Worksheet**, which shall serve as the Guaranteed Maximum Price Lump-Sum Cost. All payments are in arrears, as the County does not pay for Services not yet rendered.

C. **Price Escalation Clause**. – Reserved

D. **Compliance with Federal Requirements**

1. Section 3 Clause of the Urban Development Act of 1968
2. Provision for Remedies
3. Equal Employment Opportunity (EEO) Clause
4. Standard Federal Equal Employment Opportunity Construction Contract Specifications (Executive Order 11246)
5. Notice of Requirement for Affirmative Action to Equal Employment Opportunity (Executive Order 11246)
6. Certificate of Non-Segregated Facilities
7. Federal Labor Standards Provision
8. Acceptable Alternate Work Sheet for Contractor Certification Regarding Debarment, Suspension, Ineligibility and Voluntary Exclusion (Lower-Tier Participant) for HUD Programs.
9. Performance, Payment and Bid Bonds
10. Compliance with Clean Air and Water Acts
11. E-Verify Affidavit of Compliance
12. S.A.V.E. Program Affidavit of Compliance

ARTICLE #103 - NOTICES:

To the extent that either party to this Contract are required to provide notice(s) to the other party in compliance herewith, then the party shall direct notice(s) to the following persons:

COUNTY PROJECT MANAGER
Kevin Ivey, Superintendent
Facilities Management
Hall County, Georgia
Ph: (678) 617-4517
Email: kivey@hallcounty.org

COUNTY ISSUING OFFICER
Andy Penick
Purchasing Manager
Hall County Finance Department
2875 Browns Bridge Rd
Gainesville, GA 30504
Ph: (770) 531-4939
Email: apenick@hallcounty.org

CONTRACTOR'S CONTACT INFO

Jared C. Penny
President
Pencor, LLC
12150 Morris Rd
Alpharetta, GA 30005
jaredp@pencorconstruction.com
(678) 207-9916

REMIT-TO ADDRESS

Company's FEIN # 81-2238636
12150 Morris Rd
Alpharetta, GA 30005
Johnt@pencorconstruction.com
(678) 739-6202

ARTICLE #104 – NON-EXCLUSIVE RIGHTS:

The Contract is not exclusive. The County reserves the right to select other Contractors to provide the Services similar to those described in this Contract, during the term of the Contract should the need arise or the contractor fail to perform.

ARTICLE #105 – CONTRACT TERM: Until substantial, completion, County issuance of a Certificate of Occupancy, and all sub-contractor(s) and material suppliers' liens are satisfied.

ARTICLE #106 - CONTRACT AMENDMENTS AND MODIFICATION:

This Contract can only be modified, amended, or added to in writing and fully executed by both parties hereto. This Contract document constitutes the sole and entire Contract and understanding between the parties as to the subject matter hereof, and no verbal promises have been made by either party in relation hereto.

ARTICLE # 107 – REMEDIES AND CONTRACT PERFORMANCE:

In the event that either party to this Contract breaches this Contract, including by failure to meet the timetables set forth herein, the non-breaching party shall provide written notice to the breaching party which describes the breach of this Contract. The party whose breach is alleged shall have thirty (30) days from the date of receipt of the written notice to cure the breach or to otherwise negotiate a resolution of the breach.

If the breach has not been cured and the parties hereto have not resolved the issue described in the notice letter by thirty (30) days after receipt of the notice letter, the party authoring the letter shall be entitled to seek any and all remedies allowed by Georgia law, including damages, equitable relief, declaratory relief, specific performance, and/or seeking relief as to any bonds issued hereon. Additional provisions are;

A. **Delay or Impossibility of Performance.** Any failure or delay must be beyond the control of and without the fault or negligence of the Contractor. If the Services to be provided to the County are interrupted by a Force Majeure Event, as defined below, the County will be entitled to an equitable adjustment to the fees and other payments due to the Contractor under this Contract. If delay results from a subcontractor's negligent conduct or failure to perform, the Contractor shall not be excused from compliance with the terms and obligations of the Contract. Epidemics and pandemics are not considered Force Majeure events by the County.

Neither party shall be held liable or responsible to the other party nor be deemed to have defaulted under or breached this Agreement for failure or delay in fulfilling or performing any obligation under this Agreement when such failure or delay is caused by or results from causes beyond the reasonable control of the affected party, including but not limited to fire, floods, embargoes, war, acts of war, insurrections, riots, strikes, lockouts or other labor disturbances, or acts of God; provided, however, that the party so affected shall use reasonable commercial efforts to avoid or remove such causes of nonperformance, and shall continue performance hereunder with reasonable dispatch whenever such causes are removed. Either party shall provide the other party with prompt written notice of any delay or failure to perform that occurs by reason of Force Majeure.

Definition: The term 'force majeure' as defined in Black's Law Dictionary, is 'an event or effect that can be neither anticipated nor controlled. It is a contractual provision allocating the risk of loss if performance becomes impossible or impracticable, especially as a result of an event that the parties could not have anticipated or controlled."

B. **Obligations beyond Contract Term.** The Contract shall remain in full force and effect to the end of the specified term or until terminated or canceled pursuant to the Contract.

C. **Transition Cooperation with the County and Cooperation with other Contractors.** Contractor agrees that upon termination of this Contract for any reason, it shall provide sufficient efforts and reasonable cooperation and assistance to the County to ensure an orderly and efficient transition to the County or an alternative Contractor. Further, in the event that the County has entered into or enters into contracts with other Contractors related to the Services, Contractor agrees to cooperate fully with such other Contractors. Contractor shall not engage in any act that will interfere with the performance of work by any other Contractor(s).

ARTICLE # 108 - TERMINATION:

Either party may terminate this Contract by providing thirty (30) days written notice to the other party at any time. Should either party terminate this Contract prior to the date of automatic termination pursuant to section four (4) above, Contractor shall provide the County with all deliverables up to the date of termination thirty (30) days after the Notice to Terminate is issued. The County shall pay the Contractor for all work properly performed in compliance with the terms of the Contract up to the date of termination.

A. **Termination for Convenience.** Following thirty (30) days written notice, either party may terminate the Contract in whole or in part for any reason without the payment of any penalty or incurring any further obligation to the Contractor.

B. **Termination for Cause.** The occurrence of any one or more of the following events shall constitute cause for the County to declare the Contractor in default of its obligations under the Contract:

1. The Contractor fails to deliver or has delivered nonconforming Services or fails to perform, to the County's satisfaction, any material requirement of the Contract or is in violation of a material provision of the Contract, including, but without limitation, the express warranties made by the Contractor.

2. The County determines that satisfactory performance of the Contract is substantially endangered or that a default is likely to occur.

3. The Contractor fails to make substantial and timely progress toward performance of the Contract.

4. The Contractor becomes subject to any bankruptcy or insolvency proceeding under federal or state law to the extent allowed by applicable federal or state law including bankruptcy laws; the Contractor terminates or suspends its business; or the County reasonably believes that the Contractor has become insolvent or unable to pay its obligations as they accrue consistent with applicable federal or state law.

5. The Contractor has failed to comply with applicable federal, state and local laws, rules, County ordinances, regulations and orders when performing within the scope of the Contract.

6. The Contractor has engaged in conduct that has or may expose the County or the State to liability, as determined in the County's sole discretion; or a material breach of the terms of the Contract by County upon County's failure to cure such material breach after written notice thereof has been delivered in accordance with ARTICLE #108.C. below constitutes cause for the Contractor to declare that the County is in default of its obligations under the Contract.

C. **Notice of Default.** If either party causes one or more of the default events set out in ARTICLE #108, then either party shall issue a written Notice-of-Default to the party that causes one or more of the default events, requesting that the breach or noncompliance be remedied within the period of time specified in the party's Notice-of-Default to the Contractor. If the breach or noncompliance is not remedied within the period of time specified in the written notice, the non-breaching party may:

1. Immediately terminate the Contract for default without additional written notice.

2. In the event of a breach by the Contractor, the County may procure substitute Services from another source and charge the difference between the Contract and the substitute Contract to the defaulting Contractor; and/or,

3. Enforce the terms and conditions of the Contract and seek any legal or equitable remedies.

D. **Termination Due to Non-Availability of Funds.**
This Contract will terminate immediately and absolutely if the County determines that adequate funds are de-appropriated such that the County cannot fulfill its obligations under the Contract, such determination being at the County's sole discretion and conclusive. County agrees to provide prompt written notice to Contractor in the event of any de-appropriation.

E. **Termination due to Failure of Contractor to Act.**
The County may terminate the Contract for any one or more of the following reasons effective immediately without advance notice:

1. In the event that the Contractor must be certified or licensed as a condition precedent to providing the Services, the revocation or loss of such license or certification may result in immediate termination of the Contract effective as of the date on which the license or certification is no longer in effect.

2. The County determines that the actions, or failure to act, of the Contractor, its agents, employees or sub-Contractors have caused, or reasonably could cause, life, health or safety to be jeopardized.

3. The Contractor furnished any statement, representation, or certification in connection with the Contract or the bidding process, which is materially false, deceptive, criminal activity, incorrect or incomplete.

4. Failure of the Contractor to obtain, provide, maintain, and deliver the Performance and Payment Bonds (if required) as and when required

under this Contract, or failure to comply with any requirement pertaining to the appropriate amounts thereof as set forth in ARTICLE #123 - PERFORMANCE AND PAYMENT BOND REQUIREMENT.

F. Payment Limitation in Event of Termination. In the event of termination of the Contract for any reason by either party, the County shall pay only those amounts, if any, due and owing to the Contractor for Services actually received and accepted by the County up to and including the date of termination of the Contract and for which the County is obligated to pay pursuant to the Contract.

G. The Contractor's Termination Duties. Upon receipt of notice of termination, the Contractor shall:

1. Cease work under the Contract and take all necessary or appropriate steps to limit disbursements and minimize costs and furnish a report within thirty (30) days of the date of notice of termination, describing the status of all work under the Contract, including, without limitation, results accomplished, conclusions resulting therefrom, and any other matters the County may require.

2. Immediately cease using and return to the County, any personal property or materials, whether tangible or intangible, provided by the County to the Contractor.

3. Comply with the County's instructions for the timely transfer of any active files and work product produced by the Contractor under the Contract.

4. Cooperate in good faith with the County, its employees, agents, and Contractors during the transition period between the notification of termination and the substitution of any replacement Contractor; and

5. Immediately return to the County any payments made by the County for goods and services that were not delivered by the Contractor.

H. **Liquidated Damages.** In the event that the Contractor unreasonably delays completion of the project, or who abandons the project before completion, the Contractor must pay the County liquidated damages in the amount of twelve hundred dollars and no/100 ($1,200.00) per calendar day past the completion date.

ARTICLE # 109 – NO DEFENSE OR INDEMNIFICATION BY COUNTY:

The parties agree that the County shall not be responsible for defending or indemnifying any Contractor from any claim brought by any third party against the Contractor.

ARTICLE #110 - ASSIGNMENT AND DELEGATION BY CONTRACTOR:

The Contractor shall not assign or delegate this Contract, or any performance required by it, in whole or in part, without the prior express written consent of the County.

ARTICLE #111 – USE OF THIRD PARTIES (SUB-CONTRACTORS):

This Contract is for the benefit of the parties hereto only and is not intended to benefit any third-party or give rise to any duty or causes of action for any third party. All restrictions, obligations and responsibilities of the Contractor under the Contract shall also apply to third parties such as sub-Contractors, if allowed in writing by the County. Any Contract with a subcontractor must also preserve the rights of the County.

ARTICLE #112 – SUPERSEDES FORMER CONTRACTS

Unless otherwise specified in the Contract, this Contract supersedes all prior Contracts or Agreements between the County and the Contractor for the Services provided in connection with the Contract.

ARTICLE #113 - SEVERABILITY:

If any paragraph, sub-paragraph, sentence, clause, phrase, or portion of this Contract is declared invalid or unconstitutional by any Court of competent jurisdiction or if the provisions of any part of this Contract as applied to any particular situation or set of circumstances shall be declared invalid or unconstitutional, such invalidity shall not be construed to affect the remaining portions of this Contract not so held to be invalid or the application of this Contract to other circumstances not so held to be invalid.

ARTICLE # 114 - RECORDS:

A. **Public Records Request**. The Georgia Open Records Act, as provided in O.C.G.A. § 50-18-70 et seq, requires procurement records and all other records received by or prepared or maintained on behalf of the County, shall be made open to public inspection, unless otherwise provided by law.

B. **Record Retention and Access**. The Contractor shall maintain books, records, and documents in accordance with generally accepted accounting principles and procedures and which sufficiently and properly document and calculate all charges billed to the County throughout the term of the Contract for a period of at least five (5) years following the date of final payment or completion of any required audit, whichever is later. Records to be maintained include both financial records and service records.

ARTICLE # 115 - ADDITIONAL TERMS:

A. The County shall not be bound by any terms and conditions included in any Contractor's literature, packaging, invoice, catalog, brochure, technical data sheet, on-line representation, warranties or service level agreement or other document which attempts to impose any condition in variance with or in addition to the terms and conditions contained herein.

B. The County shall not be bound to any Terms and Conditions of the Contractor that are only accessible by hyper-link. All Terms and Conditions must be in print and approved by the County.

ARTICLE # 116 - WAIVER:

The failure of any party hereto to seek a remedy for any alleged breach of this Contract shall not constitute a waiver of any claim, cause of action, or remedy allowed by Georgia law for breach thereof.

ARTICLE # 117 - CONTRACTOR AND COUNTY RIGHTS AND OBLIGATIONS:

A. The County has the right to issue a written Stop Work Order at any time to require the Contractor cease any procedure, or the use of any equipment materials or chemicals considered by the County to be hazardous (or toxic) to persons, buildings, or surfaces. The Contractor will utilize acceptable substitutes as quickly as possible.

B. The County has the right to require the Contractor to reassign or remove any employee or subcontractor's employee from the premises temporarily or permanently when, in the County's sole opinion, the employee is not suitable. The County's decision on this matter shall be final, and Contractor will remove this employee immediately and replace with a person of at least equivalent training, experience and requisite qualifications as quickly as possible, subject to the County's prior approval.

C. Contractor agrees to obtain prior written approval from the County for the use of sub-Contractors to provide the Services described in *SCOPE OF WORK* prior to subcontractor's performance of work.

ARTICLE # 118– INSURANCE REQUIREMENTS:

Workers Compensation Insurance: Required for all contracts.

a. $500,000 Bodily Injury by Accident Each Accident
b. $500,000 Bodily Injury by Disease Each Disease
c. $500,000 Bodily Injury by Disease Each Employee

Additional Provisions: Waiver of Subrogation. The insurer agrees to waive all rights of subrogation against Hall County Board of Commissioners (BOC), its elected or appointed officers, officials, agents, authorized volunteers and employees for losses paid under the terms of this policy which arise from work performed by the Named Insured for Hall County BOC; but this provision applies regardless of whether or not Hall County BOC has received a waiver of subrogation from the insurer.

General Liability Insurance: Required for all contracts.

a. $2,000,000 General Aggregate
b. $2,000,000 Products & Completed Operations Aggregate
c. $1,000,000 Each Occurrence
d. $1,000,000 Personal & Advertising Injury
e. $500,000 Damages to Premises / Fire / Legal
f. $5,000 Medical Payments

Commercial Auto Liability Insurance: Required for all contracts, except for Goods and/or Services that are remote in nature and/or are delivered by a professional delivery service.

a. $1,000,000 Combined Single Limit OR
b. $500,000 per Person
c. $500,000 per Occurrence
d. $100,000 Property Damage
e. $1,000 for Medical Payments (no fault coverage)

Additional Provisions:

a. Uninsured motorists coverage should be equal to the per occurrence limit except for contracts with other governmental entities
b. Coverage shall be included for any owned, leased, hired, or non-owned autos
c. For any contracts involving the transportation of hazardous materials, limited pollution endorsement ISO form CA9948 or its equivalent shall be on the policy

Umbrella Liability Insurance: Required for all contracts

a. $1,000,000 per Occurrence

Additional Provisions:

a. Underlying coverage shall be General Liability, Automobile Liability, and Employers Liability (Workers Compensation)
b. Minimum limit of $5,000,000 per occurrence for all contracts over $1,000,000 or involving any special risks or high hazard activities
c. Minimum limit of $5,000,000 for automobile coverage for any transportation contracts involving seniors, special education, transit services, students, or youths.
d. Concurrent policy dates with primary liability policies except for workers compensation

B. **Insurance Certificates and General Requirements.** No Contract performance shall occur unless and until the County receives required insurance certificates.

The insurance certificate must reference the Contract number assigned by the County and document that the liability coverage purchased by the Contractor includes contractual liability coverage to insure the indemnity agreement as stated herein.

C. The Contractor understands and agrees that the foregoing policies will not be canceled, or not renewed or allowed to lapse for any reason until at least thirty (30) days prior written notice has been given to the County, or until such time as other valid and effective insurance coverage acceptable in every respect to the County and providing protection equal to protection called for in the policies referenced in this section shall have been received, accepted, and acknowledged by the County. Certificates of insurance showing such coverage to be in force shall be filed with the County prior to commencement of any work under the Contract. The foregoing policies shall be obtained from insurance companies licensed to do business in Georgia and, unless waived or modified in writing by the County, shall be an insurer with a minimum A.M. Best Rating of "A-". All such coverage

shall remain in full force and effect during the term and any renewal or extension thereof. The insurance certificate must be submitted with this Contract.

D. **Waiver of Subrogation.** There is no waiver of subrogation rights by either Party with respect to insurance.

ARTICLE # 119 – NO WAIVER:

A. **Authority to Enter into Contract.** The Contractor represents and warrants that it has full authority to enter into and perform its obligations under the Contract and that the Contract constitutes a legal, valid, and binding obligation upon the Contractor in accordance with its terms. The representatives of the parties hereto also represent and warrant that they are authorized to sign this Contract on behalf of each party hereto."

B. **Solicitation.** The Contractor warrants that no person or selling agency (except bona fide employees or selling agents maintained for the purpose of securing business) has been employed or retained to solicit and secure the Contract upon an agreement or understanding for commission, percentage, brokerage or contingency.

ARTICLE # 120 – INTELLECTUAL PROPERTY RIGHTS and OWNERSHIP:

Contractor agrees it will not use the name or any intellectual property, including but not limited to, County trademarks or logos in any manner, including commercial advertising or as a business reference, without the expressed prior written consent of the County.

ARTICLE # 121 - COMPENSATION:

A. The County will pay the Contractor for the Services provided pursuant to this Contract and in accordance with the prices quoted and conditions set forth in the Bidder's response on Exhibit C – Mandatory Cost Proposal Worksheet, which is attached hereto and incorporated into this Contract as if fully set forth herein. Payments will be made monthly in arrears to the Contractor after acceptance of the Contractor's delivered Services by the County, and after receipt of undisputed invoice to the County.

B. Prices quoted shall be firm and fixed throughout the term of this Contract, unless otherwise Amended or Modified by mutual agreement.

C. Cost may be prorated for Services added or removed under this Contract to align cost with the remaining term of Contract.

D. It is understood that this bid or proposal is made without collusion or fraud. Contractor understands and acknowledges that collusive bidding is a violation of state and federal law and may result in the cancellation of the Contract.

ARTICLE # 122 - COUNTY PAYMENT TO CONTRACTOR:

A. The County will issue a Notice to Proceed (NTP) to the Contractor, and Purchase Order(s) (herein after 'PO'). The terms of this Contract shall be incorporated by reference into any and all PO(s) issued prior to the expiration or termination of this Contract. The County will issue the PO by electronic mail (e-mail) to the Contractor's representative in *ARTICLE #103 - NOTICES*. A PO is considered "issued" when the e-mail containing the PO is sent by the County to the Contractor.

The Contractor shall not deliver any Services, equipment, devices, or components thereof until authorized in writing by the County through issuance of a PO, which shall provide a commencement Notice to Proceed date. Any work, including but not limited to travel, preliminary meetings, planning, etc., performed outside of the terms and conditions of and before the issuance of the PO will not be considered for payment. Contractors are not to begin work or ship any product on any verbal communication from within the County. The County will not be liable for payment for any work or product with the issuance of a verbal communication.

The Scope of Work shall remain in effect from the Notice to Proceed to completion of the project. The Parties agree that the County will not pay or otherwise compensate the Contractor for any Services, materials, equipment, devices or components thereof outside of the Scope of Work and/or beyond the term of this Contract, unless specifically authorized in writing as evidenced by an amendment (see *ARTICLE #106 - CONTRACT AMENDMENTS &, MODIFICATION*), a time extension letter, or as otherwise authorized by the County.

B. **Invoice/Payment.**

1. Contractor shall invoice the County via email solely to accountspayable@hallcounty.org and only after the County inspects and accepts the Services provided. Receipt of the Services does not constitute acceptance. Invoice amounts shall not exceed the Contractor's pricing set forth in *ARTICLE #102*.
2. Each invoice shall include the Contractor's current "Remit to" address; a description and location of the Services provided; the invoice amount; the Contract number and the associated PO number issued. Each properly prepared invoice must be sent in accordance with the instructions listed on the PO. Standard payment terms are net 30 days (N30) in arrears from the date the invoice is accepted, following delivery of the Services.

3. The County does not pay for services not yet received but only in arrears.
4. The Contractor shall be solely responsible for paying all costs, expenses and charges it incurs in connection with its performance under the Contract, which includes release of any liens from all sub-contractors and material providers.

C. **Unsatisfactory Performance; Delay of Payment.**

1. If the County determines that the quality of the Services provided are deficient, unacceptable, or unsatisfactory, the County's Project Manager identified in *ARTICLE #103* shall issue a written notice to Contractor. Contractor agrees that upon receipt of the written notice, it shall make every effort to correct the deficiency (ies) within the timeframe prescribed therein. If the Contractor fails to timely correct the deficiencies, the County reserves the right to delay or withhold payment pursuant to this *ARTICLE #122* or terminate the Contract (*ARTICLE #108 – TERMINATION PROVISIONS*).
2. **Delay of Payment Due to Contractor's Failure.** If the County determines that the Contractor has failed to perform or deliver any Services as required by the Contract, the Contractor shall not be entitled to any compensation under the Contract until such Services are delivered and accepted. In this event, the County may withhold that portion of the Contractor's compensation, which represents payment for Services that were not delivered. To the extent that the Contractor's failure to perform or deliver in a timely manner causes the County to incur costs, the County may deduct the amount of such incurred costs from any amounts payable to Contractor. The County's authority to deduct such incurred costs shall not in any way affect the County's authority to terminate the Contract.

D. **Set-Off Against Sums Owed by the Contractor.** In the event that the Contractor owes the County any sum under the terms of the Contract, pursuant to any judgment, or pursuant to any law, the County may set off the sum owed by the Contractor against any sum owed to the Contractor, in the County's sole discretion.

E. **Final Payment.** Contractor shall issue an invoice for final payment to the County no later than thirty (30) days following the expiration or termination date of the Contract.

F. The Contractor must not "Factor or Assign Payments" to another or a financial institution. The County will only pay the party to whom it is contracted with. The County will not in any circumstances pay a third party.

ARTICLE #123 – PERFORMANCE AND PAYMENT BONDS

The Contractor must furnish to the County a Performance Bond equal to one-hundred percent (100%) of the Contract's total initial term dollar amount, and additionally a Payment Bond equal to one-hundred percent (100%) of the total initial term dollar amount. After receipt of the bonds, the County will issue a Notice-to-Proceed. Only surety companies licensed to do business in the State of Georgia are acceptable. The Contractor is required to provide new bonds at the issuance of each Renewal Option Term(s) or Extension(s) that follow.

The Contractor must provide all required bonding instruments to the County prior to commencement of any work. The County will consider any work done prior to the receipt of bonding instruments as null-and-void and thus not eligible for compensation.

ARTICLE #124 – RETAINAGE

The County will retain funds from compensation in compliance with Georgia law. Hall County may hold up to five-percent (5%) retainage throughout the entire project and will release said retainage at the point of completion and final acceptance by the County and issuance of Occupancy Permit by County.

ARTICLE #125 – VENUE AND GOVERNING LAW

The parties agree that this Contract shall be interpreted, construed, and enforced in accordance with the laws of the State of Georgia. To the extent that either party may bring a legal suit to enforce the terms of this Contract, including suit in equity, the parties agree and consent to file any such suit in the Superior Court of Hall County, Georgia.

ARTICLE # 126 - NOTICE OF INTENT TO LITIGATE

Contractor hereby agrees not to file any civil action of disputes or claims relating to the Contract except after first giving thirty days (30) written notice to the County of the claim and the intent to initiate a civil action.

ARTICLE # 127- GEORGIA SECURITY AND IMMIGRATION COMPLIANCE ACT:

A. By signing this Contract, the Contractor certifies that prior to and throughout the performance of all applicable work under this Contract it will remain in full compliance with all federal and state immigration laws, including but not limited to 8 U.S.C. § 1324a and the Georgia Security and Immigration Compliance Act (O.C.G.A. §13-10-90 et seq.), as amended by the Illegal Immigration Reform and Enforcement Act of 2011, regarding the verification of employment eligibility of employees under the Immigration Reform and Control Act of 1986. Contractor will ensure that only persons who are citizens or nationals of the United States or non-citizens authorized under federal

immigration laws are employed to perform services under this Contract or any subcontract or sub-subcontract hereunder.

B. Contractor further certifies its compliance with the aforementioned federal and state immigration laws set forth by signing a sworn affidavit, the Georgia Security and Immigration Compliance Act Affidavit, notarized by an Official Notary Public, and obtaining the same affidavits from any sub-contractor providing services pursuant to this Contract.

ARTICLE # 128 – ORDER OF PRECEDENCE:

In the event of any inconsistency, ambiguity, or conflict among the specific provisions of the Contract and the Contractor's Response, the order of precedence shall be as follows:

A. First, any amendments to the Contract, including all Exhibits thereto.
B. Second, the Contract itself, including all Exhibits thereto.
C. Third, Attachments appended to the Contract.

ARTICLE # 129– CONTRACT EXHIBITS AND ATTACHMENTS:

The Parties mutually acknowledge that any following Exhibits and Attachments listed below made a part of this Contract, as though expressly written in the RFQ/P documents and the bidder's response, are herein incorporated into this contract by reference.

EXHIBIT C - Mandatory Cost Proposal

ARTICLE # 130 - ENTIRE CONTRACT:

This Contract, as executed and approved, shall constitute the entire agreement between the Parties and supersedes all other prior and contemporaneous statements, agreements, and understandings between the Parties. No written or oral statements, agreements, or understandings that are not set out, referenced, or specifically incorporated in this Contract shall in any way be binding or of effect between the Parties.

ARTICLE # 131– VALIDITY

If any paragraph, sub-paragraph, sentence, clause, phrase or any portion of this agreement shall be declared invalid or unconstitutional by any Court of competent jurisdiction or if the provisions of any part of this agreement as applied to any particular situation or set of circumstances shall be declared invalid or unconstitutional, such invalidity shall not be constructed to affect the portions of this agreement not so held to be invalid or the application of this agreement to other circumstances not so held to be

invalid. The parties hereby declare that this is the intent of the parties to this agreement is to provide for separate and divisible parts.

ARTICLE #132 -- SALES TAX EXEMPTION STATUS

The County is exempt from Federal Excise Taxes and from Georgia State and Local Sales and Use Taxes on the Services. The Contractor may request a copy of the County's Georgia Sales and Use Tax Exemption Certificate.

ARTICLE #133 – HOLD HARMLESS AGREEMENT

The successful respondent hereby agrees to indemnify, hold free and harmless, Hall County Government, County Commissioners, its agents, servants, employees, officers, directors and elected officials, or any other person(s) against any loss or expense. This includes attorney fees, because of any liability imposed by law upon the County, except in cases of the County's sole negligence, sustained by any person(s) on account of bodily injury or property damage arising out of or in the consequence of this agreement.

ARTICLE # 134 – CONTRACT TERMS AND CONDITIONS

1. All purchases must comply with The Official Code of Hall County Sections 3.10.010 – 3.10.190.
2. If any conflict or ambiguity arises between the Terms and Conditions herein, and The Official Code of Hall County, the latter will govern.
3. The Terms and Conditions set forth herein shall supersede and govern over all Contractor's Terms and Conditions or Service Level Agreements.
4. Hall County, Georgia, herein referred to as 'The County', retains the right to 'red-line' sections of the Supplier's Terms and Conditions if such are in conflict with the best interest of the County.
5. Acceptance of a Purchase Order (PO) and delivery of Goods or Services serves as the Supplier's full and complete acceptance of The County's Terms and Conditions.
6. The terms; supplier, vendor, bidder, offeror, Contractor, Contractor, designer, distributor, dealer or manufacturer or otherwise purveyor or source of supply or performance of service shall mean one-and-the-same, herein denoted as 'Supplier' for goods and 'Contractor' for services.
7. Furthermore, the terms; goods, materials, commodities, components, drawings, drafts, renderings, plans, physical or digital, software, SaaS, Engineering, Architectural, capital asset equipment, vehicles, heavy earth-moving or other equipment, purchased or leased, or other such deliverables are herein denoted as 'Goods' and shall mean one-and-the-same.
8. 'Services' shall mean all services, either financial, advisory, consultative, labor, staff augmentation, construction, rehabilitation, restoration, repair, support or maintenance, communication, telephony, internet, TV or streaming, pest control, grounds maintenance, custodial and janitorial, street or paved surfaces cleaning, drain cleaning or otherwise where services are offered for consideration.
9. The County's payment terms are Net 30 days.
10. The Supplier shall transfer and deliver all goods or services described on the attached PO for the consideration set forth herein.

11. The Supplier shall only deliver goods and services as described on the PO and within the Scope of Work and the Supplier's Bid Response.
12. The County holds no obligation to pay for goods delivered or services rendered unless specified on a written Purchase Order or a Change Order of such.
13. The Supplier shall not construe any verbal consent to purchase goods or services as valid.
14. The County does not accept substitutions of services or goods that do not comply with the Scope of Work or Specifications set forth in the Purchase Order, Contract or Agreement, unless mutually agreed in writing by both parties.
15. The County does not accept automatic contract renewals with the exception of monthly subscription services.
16. The County only pays for services rendered in arrears. The County does not pay for services not yet rendered.
17. The County does not pay deposits towards goods ordered. Exceptions exist for custom made items (such as window coverings and blinds, or carpet, tile etc.), fabrication, decoration, or otherwise custom designed specifically for the County.
18. The County will accept backorders only if goods are out of stock and with prior written notice. Supplier's shall ship all quantities that it has in stock and hold orders for backorders.
19. The County participates in Cooperative Purchasing Agreements, State of Georgia Statewide Contracts, and other state, local, Intergovernmental Agreements, Memorandums-of-Understanding and other such Agreements.
20. In all cases, the jurisdiction shall be the State of Georgia, County of Hall, for arbitration or other legalities
21. Deliveries go to the ship-to addresses listed on the PO and within the time specified. The Supplier must follow instructions if multiple ship-to address exist on the PO.
22. Risk of loss of the goods shall pass to The County upon inspection and acceptance only.
23. Receipt of goods or services does not constitute acceptance.
24. Title to the goods shall remain with the Supplier until acceptance by The County.
25. The Supplier warrants that the goods are merchantable and that the Supplier has a legal right to deliver the goods and services and as described herein.
26. The County shall have the right to inspect all goods or services at the time and place of delivery.
27. Vendor agrees not to assign in full or part of the Contract to another party without the County's express written consent. Any attempted assignment or delegation shall void and make ineffectual for all purposes unless made in conformity with this paragraph.
28. The County is exempt from Federal Excise Tax and Georgia Sales and Use Tax.
29. This issuance of the PO shall not violate the Code of Ethics and Conflicts of Interest for Public Officers and Employees for Government Service set forth in the 2020 Section 45-1020 *et seq.* of the Official Code of Georgia Annotated and the Official Code of Hall County Section 3.10.070 governing Ethics.
30. All goods and services supplied pursuant to this PO shall, unless otherwise noted, must conform exactly to all of the descriptions, specifications, Exhibits and attachments contained in the Bid Solicitation upon which a PO is based and all the terms, conditions, and specifications of the Bid Solicitation are incorporated herein by reference and made a part hereof.
31. Any-and-all media production, recordings, videos, photography, artwork, plates, engravings, and other printed or digital media materials paid in full by The County is considered County property and shall be delivered to The County upon request.

32. Invoices submitted to The County will reflect the language of the PO with the PO Number printed on each invoice submitted.
33. In the event that a PO has an attached Contract or Agreement, the terms and conditions of the latter shall govern in the event of any conflict with these terms and conditions.
34. The Supplier may be suspended, terminated, or debarred if it is determined that the Supplier has made false certification(s) or has violated such certification(s) by failure to carry out the requirements herein.
35. The Supplier certifies that it and its subcontractors are not been debarred, suspended, or declared ineligible by any agency of the County, or State of Georgia or as defined in the Federal Acquisition Regulation (FAR) 48 C.F.R. Ch. 1 Subpart 9.4.
36. The Supplier certifies that the Supplier is not currently engaged in an active or pending lawsuit or other grievance, injunction, or levy against the County.
37. Goods are Free-On-Board (F.O.B.) destination and freight, shipping and delivery shall be pre-paid and added to the invoice as a separate line item.
38. The County does not pay late fees nor interest charges.
39. The Supplier shall charge the County the exact amount of freight, delivery, handling and insurance charges.
40. The County is not bound to any minimum or maximum quantity or dollar amount set by the Supplier
41. In the event there is a discrepancy between the unit price and extended price, the unit price shall govern.

[Signature Page Follows]

IN WITNESS WHEREOF, said Parties have hereunto affixed their signature and seal on the day, month, and year first above written:

PENCOR LLC

By: _____

Title: President

Print Name: Jared Penny

Sworn to and subscribed before me this

30th Day of May, 2023

Notary Public: _____

John Treadway, Dawson County, GA

Notary commission expires: 2-24-25

[Locus Sigilli]

JOHN TREADWAY NOTARY EXPIRES GEORGIA 2/24/2025 PUBLIC DAWSON COUNTY

HALL COUNTY, GEORGIA

By: _____

Richard Higgins, Chairman
Hall County Board of Commissioners

Attestment: _____

County Clerk

Sworn to and subscribed before me this

_____ Day of _____, 2023

Notary Public: _____

Notary commission expires: _____

[Locus Sigilli]

APPROVED AS TO FORM:

William J. Linkous III

William Linkous, County Attorney
Or designee

Section 3 Clause of the Urban Development Act of 1968

1.) The work to be performed under this contract is on a project assisted under a program providing direct Federal financial assistance from the Department of Housing and Urban Development and is subject to the requirements of section 3 of the Housing and Urban Development Act of 1968, as amended, 12 U.S.C. 1701u. Section 3 requires that to the greatest extent feasible opportunities for training and employment be given lower income residents of the project area and contracts for work in connection with the project to be awarded to business concerns which are located in, or owned in substantial part by persons residing in the area of the project.

2.) The parties to this contract will comply with the provisions of said Section 3 and the regulations issued pursuant thereto by the Secretary of Housing and Urban Development set forth in 24 CFR Part 75 and all applicable rules and orders of the Department issued thereunder prior to the execution of this contract. The parties to this contract certify and agree that they are under no contractual or other disability which would prevent them from complying with these requirements.

3.) The contractor will send to each labor organization or representative of workers with which he has a collective bargain-agreement or other contract or understanding, if any, a notice advising the said labor organization or workers' representative of his commitments under this Section 3 clause and shall post copies of the notice in conspicuous places available to employees and applicants for employment or training.

4.) The contractor will include this Section 3 clause in every subcontract for work in connection with the project and will, at the direction of the applicant for or recipient of Federal financial assistance, take appropriate action pursuant to the subcontract upon a finding that the subcontractor is in violation of regulations issued by the Secretary of Housing and Urban Development, 24 CFR Part 75. The contractor will not subcontract with any subcontractor where it has notice or knowledge that the letter has been found in violation of regulations under 24 CFR Part 75 and will not let any subcontract unless the subcontractor has first provided it with a preliminary statement of ability to comply with the requirements of these regulations.

5.) Compliance with the provisions of Section 3, the regulations set forth in the 24 CFR Part 75, and all applicable rules and orders of the Department issued thereunder prior to the execution of the contract, shall be a condition of the Federal financial assistance provided to the project, binding upon the applicant or recipient for such assistance, its successors, and assigns. Failure to fulfill these requirements shall subject the applicant or recipient, its contractors and subcontractors, its successors, and assigns to those sanctions specified by the grant or loan agreement or contract through which Federal assistance is provided, and to such sanctions as are specified by 24 CFR Part 75.

PROVISION for REMEDIES

Note: It is required that any contract, regardless of value, contain a provision for remedies in case of violation or breach of terms, including sanctions. The following is a sample clause which meets the requirement. There is no specific required language and the recipient's attorney should approve whatever language is used.

1.) **Termination:** Unearned payments under this contract may be suspended or terminated upon refusal to accept any additional conditions that may be imposed by City/County; or if the grant to the City/County under the Community Development Block Grant Program is suspended or terminated. Moreover, if through any cause, the contractor shall fail to fulfill its obligations under this contract in a timely and proper manner, or if the contractor shall violate any of the covenants, agreements, conditions or obligations of the contract documents; the City/County may terminate this contract by giving written notice to the contractor and surety of such termination and specifying the effective date of such termination. In such event, the City/County may take over the work and prosecute the same to completion, by contract or otherwise, and the contractor and his sureties shall be liable to the City/County for any additional cost incurred by the Owner in its completion of the work and they shall also be liable to the Owner for liquidated damages for any delay in the completion of the work as provided below. Furthermore, the Contractor will be paid an amount which bears the same ratio to the total compensation as the work and services actually performed bear to the total work and services required. Provided, however, that if less than sixty percent of the services required by this Contract have been performed upon the effective date of such termination, the Contractor shall be reimbursed (in addition to the above payment) for that portion of the actual out-of-pocket expenses (not otherwise reimbursed under this Contract) incurred by the Contractor during the Contract period which are directly attributable to the uncompleted portion of the services required by this Contract.

2.) **Liquidated Damages for Delays.** If the work is not completed within the time stipulated, therefore, including any extensions of time for excusable delays as herein provided, the Contractor shall pay to the Owner as fixed and agreed liquidated damages (it being impossible to determine the damages occasioned by the delay) for each working day of delay, until the work is completed, the amount as set forth in *(insert location of liquidated damages statement, normally found in the Contract General Conditions)* and the Contractor and his sureties shall be liable to the Owner for the amount thereof.

3.) **Excusable Delays.** The right of the Contractor to proceed shall not be terminated nor shall the Contractor be charged with liquidated damages for any delays in the completion of the work due:

(a) To any acts of the Government, including controls or restrictions upon or requisitioning of materials, equipment, tools, or labor by reason of war, National Defense, or any other national emergency;
(b) To any acts of the Owner;

(c) To causes not reasonable foreseeable by the parties to this Contract at the time of the execution of the Contract which are beyond the control and without the fault or negligence of the Contractor, including, but not restricted to, acts of God or of the public enemy, acts of another Contractor in the performance of some other contract with the Owner, fires, floods, epidemics, quarantine, strikes, freight embargoes, and weather of unusual severity such as hurricanes, tornadoes, and cyclones; and

(d) To any delay of any subcontractor occasioned by any of the causes specified in subparagraphs (a) (b) and (c) or this subparagraph "d".

Provided, however, that the Contractor promptly notified the Owner within ten (10) days of the cause of the delay. Upon receipt of such notification, the Owner shall ascertain the facts and the cause and extent of delay. If upon the basis of the terms of this contract the delay is properly excusable, the Owner shall extend the time for completing the work for a period of time commensurate with the period of excusable delay.

Sample "Termination for Convenience Clause"

Note: it is required that a "termination" clause be included in any contract over $10,000 in value. This is a sample clause. The recipient's attorney should approve whatever language is used in the contract. There is no required language.

1.) **Termination for Convenience of the (city or county):**

The (city or county) may terminate this contract at any time for any reason by giving at least thirty (30) days notice in writing to the contractor. If the contract is terminated by the (city or county) as provided herein, the contractor will be paid a fair payment as negotiated with the (city or county) for the work completed as of the date of termination.

Equal Employment Opportunity (EEO) Clause

During the performance of this contract, the Contractor agrees as follows:

1.) The Contractor will not discriminate against any employee or applicant for employment because of race, color, religion, sex or national origin. The Contractor will take affirmative action to ensure that applicants are employed, and the employees are treated during employment without regard to their race, color, religion, sex or national origin. Such action shall include, but not be limited to the following: Employment, upgrading, demotion, or transfer; recruitment or recruitment advertising; layoff or termination; rates of pay or other forms of compensation; and selection for training, including apprenticeship. The Contractor agrees to post in conspicuous places, available to employees and applicants for employment, notices to be provided setting forth the provisions of this nondiscrimination clause.

2.) The Contractor will, in all solicitations or advertisements for employees placed by or on behalf of the Contractor, state that all qualified applicants will receive consideration for employment without regard to race, color, religion, sex or national origin.

3.) The Contractor will send to each labor union or representative of workers with which he has a collective bargaining agreement or other contract or understanding, a notice to be provided advising the said labor union or workers' representative of the Contractor's commitments under this section, and shall post copies of the notice in conspicuous places available to employees and applicants for employment.

4.) The Contractor will comply with all provisions of Executive Order 11246 of September 24, 1965, and of the rules, regulations and relevant orders of the Secretary of Labor.

5.) The Contractor will furnish all information and reports required by Executive Order 11246 of September 24, 1965, and by rules, regulations and orders of the Secretary of Labor, or pursuant thereto, and will permit access to his books, records and accounts by the administering agency and the Secretary of Labor for purposes of investigation to ascertain compliance with such rules, regulations and orders.

6.) In the event of the Contractor's noncompliance with the nondiscrimination clauses of this contract or with any of the said rules, regulations, or orders, this contract may be canceled, terminated or suspended in whole or in part and the contractor may be declared ineligible for further Government contracts or federally assisted construction contracts in accordance with procedures authorized in Executive Order 11246 of September 24, 1965, and such other sanctions may be imposed and remedies invoked as provided in Executive Order 11246 of September 24, 1965, or by the rule, regulation, or order of the Secretary of Labor, or as otherwise provided by law.

7.) The Contractor will include the portion of the sentence immediately preceding paragraph (1) and the provisions of paragraphs (1) through (7) in every subcontract or

purchase order unless exempted by rules, regulations, or orders of the Secretary of Labor issued pursuant to Section 204 of Executive Order 11246 of September 24, 1965, so that such provisions will be binding upon each subcontractor or vendor. The Contractor will take such action with respect to any subcontract or purchase order as the administering agency may direct as a means of enforcing such provisions, including sanctions for noncompliance. Provided, however, that in the event a Contractor becomes involved in, or is threatened with litigation with a subcontractor or vendor as a result of such direction by the administering agency the contractor may request the United States to enter into such litigation to protect the interests of the United States.

CA-26

STANDARD FEDERAL EQUAL EMPLOYMENT OPPORTUNITY CONSTRUCTION CONTRACT SPECIFICATIONS (EXECUTIVE ORDER 11246)

1. As used in these specifications:

   a. "Covered Area" means the geographical area described in the solicitation from which this contract resulted.

   b. "Director" means Director, Office of Federal Contract Compliance Programs, United States Department of Labor, or any person to whom the Director delegates authority.

   c. "Employer Identification Number" means the Federal Social Security Number used on the Employer's Quarterly Federal Tax Return, U.S. Treasury Department Form 941.

   A Minority Group Member is:

   ...American Indian or Alaskan Native
   consisting of all persons having origins in any of the original people of North American and who maintain cultural identification through tribal affiliations or community recognition.

   ...Black
   consisting of all persons having origins in any of the Black racial groups of Africa.

   ...Asian or Pacific Islander
   consisting of all persons having origins in any of the original people of the Far East, Southeast Asia, the Indian Sub-Continent or the Pacific Islands. This area includes China, India, Japan, Korea, the Philippines and Samoa.

   ...Hispanic
   consisting of all persons of Mexican, Puerto Rican, Cuban, Central or South American or other Spanish culture or origin.

   ...Cape Verde an
   consisting of all persons having origins in the Cape Verde Islands.

   ...Portuguese
   consisting of all persons of Portuguese, Brazilian or other Portuguese culture or origin.

2. Whenever the Contractor, or any Subcontractor at any tier, subcontracts a portion of the work involving any construction trade, it shall physically include in each subcontract in excess of $10,000.00 the provisions of these specifications and the notice which contains the applicable goals for minority and female participation and which is set forth in the solicitations from which this contract resulted.

3. If the Contractor is participating (pursuant to 41 CFR 60-4.5) in the Hometown Plan approved by the U.S. Department of Labor in the covered area either individually or through an association, its affirmative action obligations on all work in the Plan area (including goals and timetables) shall be in accordance with that Plan for those trades which have unions participating in the Plan. Contractors must be able to demonstrate their participation in and compliance with the provisions of any such Hometown Plan. Each Contractor or subcontract participating in an approved Plan is individually required to comply with its obligations under the EEO clause, and to make a good faith effort to achieve each goal under the Plan in each trade in which it has employees. the overall good faith performance by other Contractors or subcontractors toward a goal in an approved Plan does not excuse any covered Contractor's or subcontractor's failure to make good faith efforts to achieve the Plan goals and timetables.

4. The Contractor shall implement the specific affirmative action standards provided in Paragraphs 7a through p of these specifications. The goals set for the Contractor in the solicitation from which this contract resulted are expressed as percentages in the total hours of employment and training of minority and female utilization the Contractor should reasonably be able to achieve in each construction trade in which it has employees in the covered area. The Contractor is expected to make substantially uniform progress toward its goals in each craft during the period specified.

5. Neither the provisions of any collective bargaining agreement nor the failure by a union with whom the Contractor has a collective bargaining agreement to refer either minority or women shall excuse the Contractor's obligations under these specifications, Executive Order 11246, or the regulations promulgated pursuant thereto.

6. In order for the non-working training hours of apprentices and trainees to be counted in meeting the goals, such apprentices and trainees must be employed by the Contractor during the training period, and the Contractor must have made a commitment to employ the apprentices and trainees at the completion of their training, subject to the availability of employment opportunities. Trainees must be trained pursuant to training programs approved by the U.S. Department of Labor.

7. The Contractor shall take specific affirmative actions to ensure equal employment opportunity . The evaluation of the Contractor's compliance with these specifications shall be based upon its effort to achieve maximum results from its actions. The Contractor shall document these efforts fully and shall implement affirmative action steps at least as extensive as the following:

   a. Ensure and maintain a working environment free of harassment, intimidation and coercion at all sites, and in all facilities at which the Contractor's employees are assigned to work. The Contractor, where possible, will assign two or more women to each construction project. The Contractor shall specifically ensure that all foremen, superintendents, and other on-site supervisory personnel are aware of and carry out the Contractor's obligation to maintain such a working environment with specific attention to minority or female individuals working at such sites or in such facilities.

   b. Establish and maintain a current list of minority and female recruitment sources, provide written notification to minority and female recruitment sources and to community organizations when the Contractor or its unions have employment opportunities available and maintain a record of the organizations' responses.

c. Maintain a current file of the names, addresses and telephone numbers of each minority and female off-the-street applicant and minority or female referral from a union, a recruitment source or community organization and of what action was taken with respect to each such individual. If such individual was sent to the union hiring hall for referral and was not referred back to the Contractor by the union or, if referred, not employed by the Contractor, this shall be documented in the file with the reason therefor, along with whatever additional actions the Contractor may have taken.

d. Provide immediate written notifications to the Regional Director when the union or unions, with which the Contractor has a collective bargaining agreement, have not referred to the Contractor a minority person or woman sent by the Contractor or when the Contractor has other information that the union referral process has impeded the Contractor's efforts to meet its obligations.

e. Develop on-the-job training opportunities and/or participate in training programs for the area which expressly include minorities and women, including upgrading programs and apprenticeship and trainee programs relevant to the Contractor's employment needs, especially those programs funded or approved by the Department of Labor. The Contractor shall provide notice of these programs to the sources compiled under Paragraph 7b above.

f. Disseminate the Contractor's EEO policy by providing notice of the policy to unions and training programs and requesting their cooperation in assisting the Contractor in meeting its EEO obligations; by including it in any policy manual and collective bargaining agreement; by publicizing it in the company newspaper, annual report, etc.; by specific review of the policy with all management personnel and with all minority and female employees at least once a year; and by posting the company EEO policy on bulletin boards accessible to all employees at each location where construction is performed.

g. Review, at least annually, the company's EEO policy and affirmative action obligations under these specifications with all employees having any responsibility for hiring, assignment, layoff, termination or other employment decisions including specific review of these items with on-site supervisory personnel such as Superintendents, Supervisors etc., prior to the initiation of construction work at any job site. A written record shall be made and maintained identifying the time and place of these meetings, persons attending, subject matter discussed, and disposition of the subject matter.

h. Disseminate the Contractor's EEO policy externally by including it in any advertising in the news media, and providing written notification to, and discussing the Contractor's EEO policy with, other Contractors and subcontractors with whom the Contractor anticipates doing business.

i. Direct its recruitment efforts, both oral and written, to minority, female and community organizations, to schools with minority and female students and to minority and female recruitment and training organizations serving the Contractor's recruitment area and employment needs. Not later than one month prior to the date for the acceptance of applications for apprenticeship or other training by any recruitment source, the Contractor shall send written notifications to organizations such as the above, describing the openings, screening procedures, and tests to be used in the selection process.

j. Encourage present minority and female employees to recruit other minority persons and women and, where reasonable, provide after school, summer and vacation employment to minority and female youth both on the site and in other areas of a Contractor's workforce.

k. Validate all tests and other selection requirements where there is an obligation to do so under 41 CFR Part 60-3.

l. Conduct, at least annually, an inventory and evaluation of all minority and female personnel for promotional opportunities and encourage these employees to seek or to prepare for, through appropriate training, etc., such opportunities.

m. Ensure that seniority practices, job classifications, work assignments and other personnel practices, do not have a discriminatory effect by continually monitoring all personnel and employment-related activities to ensure that the EEO policy and Contractor's obligations under these specifications are being carried out.

n. Ensure that all facilities and company activities are non-segregated except that separate or single-user toilet and necessary changing facilities shall be provided to assure privacy between the sexes.

o. Document and maintain a record of all solicitations of offers for subcontracts from minority and female construction contractors and suppliers, including circulation of solicitations to minority and female contractor associations and other business associations.

p. Conduct a review, at least annually, of all supervisors' adherence to and performance under the Contractor's EEO policies and affirmative action obligations.

8. Contractors are encouraged to participate in voluntary associations which assist in fulfilling one or more of their affirmative action obligations (Paragraph 7a through p). The efforts of a contractor association, joint contractor-union, contractor-community, or other similar group of which the Contractor is a member and participant, may be asserted as fulfilling any one or more of its obligations under Paragraph 7a through p of these Specifications provided that the Contractor actively participates in the group, makes every effort to assure that the group has a positive impact on the employment of minorities and women in the industry, reflected in the Contractor's minority and female workforce participation , makes a good faith effort to meet its individual goals and timetables, and can provide access to documentation which demonstrates the effectiveness of actions taken on behalf of the Contractor. The obligation to comply, however, is the Contractor's, and failure of such a group to fulfill an obligation shall not be a defense for the Contractor's non-compliance.

9. A single goal for minorities and a separate single goal for women have been established. The Contractor, however, is required to provide equal employment opportunity and to take affirmative action for all minority groups, both male and female, and all women, both minority and non-minority. Consequently, the Contractor may be in violation of the Executive Order if a particular group is employed in a substantially disparate manner (for example, even though the Contractor has achieved its goals for women generally, the Contractor may be in violation of the Executive Order if a specific minority group of women is under-utilized).

10. The Contractor shall not use the goals and timetables or affirmative action standards to discriminate against any person because of race, color, religion, sex or national origin.

11. The Contractor shall not enter into any subcontract with any person for firm debarred from Government contracts pursuant to Executive Order 11246.

12. The Contractor shall carry out such sanctions and penalties for violation of these specifications and of the Equal Opportunity Clause, including suspension, terminations and cancellation of existing subcontracts as may be imposed or ordered pursuant to Executive Order 11246, as amended, and its implementing regulations, by the Office of Federal Contract Compliance Programs. Any Contractor who fails to carry out such sanctions and penalties shall be in violation of these specifications and Executive Order 11246, as amended.

13. The Contractor, in fulfilling its obligations under these specifications, shall implement specific affirmative action steps, at least as extensive as those standards prescribed in Paragraph 7 of these specifications, so as to achieve maximum results from its efforts to ensure equal employment opportunity. If the Contractor fails to comply with the requirements of the Executive Order, the implementing regulations or these specifications, the Director shall proceed in accordance with 41 CFR 60-4.8.

14. The Contractor shall designate a responsible official to monitor all employment-related activity to ensure that the company EEO policy is being carried out, to submit reports relating to the provisions hereof as may be required by the Government and to keep records. Records shall at least include for each employee the name, address, telephone numbers, construction trade union affiliation if any, employee identification number when assigned, social security number, race, sex, status (e.g., mechanic, apprentice, trainee, helper or laborer), dates of changes in status, hours worked per week in the indicated trade, rate of pay, and locations at which the work was performed. Records shall be maintained in an easily understandable and retrievable form; however, to the degree that existing records satisfy this requirement, contractors shall not be required to maintain separate records.

15. Nothing herein provided shall be construed as a limitation upon the application of other laws which establish different standards of compliance or upon the application or requirements for the hiring of local or other area residents (e.g., those under the Public Works Employment Act of 1977 and the Community Development Block Grant Program).

NOTICE OF REQUIREMENT FOR AFFIRMATIVE ACTIN TO EQUAL EMPLOYMENT OPPORTUNITY (EXECUTIVE ORDER 11246)

1. The Offeror's or Bidder's attention is called to the "Equal Opportunity Clause" and the "Standard Federal Equal Employment Opportunity Construction Contract Specifications" set forth herein.

2. The goals and timetables for minority and female participation, expressed in percentage terms for the Contractor's aggregate workforce in each trade on all construction work in the covered area, area as follows:

Timetable:	Goals for minority participation	Goals for female participation
Until Further Notice	(insert goal)	x.xx%

These goals are applicable to each non-exempt contractor's total on-site construction workforce, regardless of whether or not part of that workforce is performing work on a Federal, Federally assisted or non-Federally related project, contract or sub-contract.

The contractor's compliance with the Executive Order and the regulations in 41 CFR Part 60-4 shall be based on its implementation of the Equal Opportunity Clause, specific affirmative action obligations required by the specifications set forth in 41 CFR 60-4.3(a), and its efforts to meet the goals established for the geographical area where the contract resulting from this solicitation is to be performed. The hours of minority and female employment and training must be substantially uniform throughout the length of the contract, and in each trade, and the contractor shall make a good faith effort to employ minorities and women evenly on each of its projects. The transfer of minority or female employees or trainees from Contractor to Contractor or from project to project for the sole purpose of meeting the Contractor's goals shall be a violation of the contract, the Executive Order and the regulations in 41 CFR Part 60-4. Compliance with the goals will be measured against the total work hours performed.

3. The Contractor shall provide written notification to the Director of the Office of Federal Contract Compliance Programs within 10 working days of award of any construction subcontract in excess of $10,000 at any tier for construction work under the contract resulting from this solicitation. The notification shall list the name, address and telephone number of the subcontractor; employer identification number; estimated dollar amount of the subcontract; estimated starting and completion dates of the subcontract; and the geographical area in which the contract is to the performed.

4. As used in this Notice, and in the contract resulting from this solicitation, the "covered area" is (insert description of the economic area in which the contract will be performed, giving the city, SMSA or non SMSA designation, and a list of the counties included in the economic area).

CERTIFICATE OF NON-SEGREGATED FACILITIES

We, _____(Company)
Certify that we do not and will not maintain or provide for our employees any segregated facilities at any of our establishments, and that we do not and will not permit our employees to perform their services at any location, under our control, where segregated facilities are maintained. We understand and agree that breach of this certification is a violation of Equal Opportunity clause required by Executive Order 11246, amended.

As used in this certification, the term "segregated facilities" means any waiting rooms, work areas, rest rooms and wash rooms, restaurants and other eating areas, time clocks, locker rooms and other storage or dressing areas, parking lots, drinking fountains, recreation or entertainment areas, transportation and housing facilities provided for employees which are segregated by explicit directive or are in fact segregated on the basis of race, creed, color, or national origin, because of habit, local custom or otherwise.

We further agree that (except where we have obtained identical certifications from proposed Subcontractors for specific time periods) we will obtain identical certifications from proposed Subcontractors prior to the award of subcontracts exceeding $10,000 which are not exempt from the provisions of the Equal Opportunity clause; that we will retain such certification in our files; and that we will forward the following notice to such proposed Subcontractors (except where the proposed Subcontractors have submitted identical certifications for specific time periods).

NOTICE TO PROSPECTIVE SUBBUILDERS OF REQUIREMENT FOR CERTIFICATION OF NON-SEGREGATED FACILITIES. A certification of Non-segregated facilities as required by the 9 May 1967 order on Elimination of Segregated Facilities, by the Secretary of Labor (32 Fed. Reg. 7439, 19 May 1967), must be submitted from the provisions either for each subcontract or for all subcontracts during a period (i.e. quarterly, semi-annually, or annually).

NOTE: Whoever knowingly and willfully makes any false, fictitious or fraudulent representation may be liable to criminal prosecution under 18 U.S.C. 1001.

_____
(Name of Company)

By: _____

Date: _____ Title: _____

FEDERAL LABOR STANDARDS PROVISION
Georgia Community Development Block Grant

Applicability

The Project or Program to which the construction work covered by this contract pertains is being assisted by the United States of America and the following Federal Labor Standards Provisions are included in this Contract pursuant to the provisions applicable to such Federal assistance.

A.1.(i) **Minimum Wages.** All laborers and mechanics employed or working upon the site of the work (or under the United States Housing Act of 1937 or under the Housing Act of 1949 in the construction or development of the project), will be paid unconditionally and not less often than once a week, and without subsequent deduction or rebate on any account (except such payroll deductions as are permitted by regulations issued by the Secretary of Labor under the Copeland Act (29 CFR Part 3), the full amount of wages and bona fide fringe benefits (or cash equivalents thereof) due at time of payment computed at rates not less than those contained in the wage determination of the Secretary of Labor which is attached hereto and made a part hereof, regardless of any contractual relationship which may be alleged to exist between the contractor and such laborers and mechanics. Contributions made or costs reasonably anticipated for bona fide fringe benefits under Section 1(b)(2) of the Davis-Bacon Act on behalf of laborers or mechanics are considered wages paid to such laborers or mechanics, subject to the provisions of 29 CFR Part 5.5(a)(4). Laborers or mechanics performing work in more than one classification may be compensated at the rate specified for each classification for the time actually worked therein: Provided, that the employer's payroll records accurately set forth the time spent in each classification in which work is performed. The wage determination (including any additional classification and wage rates conformed under 29 CFR Part 5.5(a)(1)(ii)) and the Davis-Bacon poster (WH-1321) shall be posted at all times by the contractor and its subcontractors at the site of the work in a prominent and accessible place where it can be easily seen by the workers.

(ii)(a) The contracting officer shall require that any class of laborers or mechanics, which is not listed in the wage determination and which is to be employed under the contract shall be classified in conformance with the wage determination. The contracting officer shall approve an additional classification and wage rate and fringe benefits therefore only when the following criteria have been met:

(1) The work to be performed by the classification requested is not performed by a classification in the wage determination; and

(2) The classification is utilized in the area by the construction industry; and

(3) The proposed wage rate, including any bona fide fringe benefits, bears a reasonable relationship to the wage rates contained in the wage determination.

(b) If the contractor and the laborers and mechanics to be employed in the classification (if known), or their representatives, and HUD or its designee agree on the classification and wage rate (including the amount designated for fringe benefits where appropriate), a report of the action taken shall be sent by HUD or its designee to the Administrator of the Wage and Hour Division, Employment Standards Administration, US. Department of Labor, Washington, D.C. 20210. The Administrator, or an authorized representative, will approve, modify, or disapprove every additional classification action within 30 days of receipt and so advise HUD or its designee or will notify HUD or its designee within the 30-day period that additional time is necessary.

(c) In the event the contractor, the laborers or mechanics to be employed in the classification or their representatives, and HUD or its designee do not agree on the proposed classification and wage rate (including the amount designated for fringe benefits, where appropriate), HUD or its designee shall refer the questions, including the views of all interested parties and the recommendation of HUD or its designee, to the Administrator for determination. The Administrator, or an authorized representative, will issue a determination within 30 days of receipt and so advise HUD or its designee or will notify HUD or its designee within the 30-day period that additional time is necessary.

(d) The wage rate (including fringe benefits where appropriate) determined pursuant to subparagraphs (1)(b) or (c) of this paragraph, shall be paid to all workers performing work in the classification under this contract from the first day on which work is performed in the classification.

(iii) Whenever the minimum wage rate prescribed in the contract for a class of laborers or mechanics includes a fringe benefit which is not expressed as an hourly rate, the contractor shall either pay the benefit as stated in the wage determination or shall pay another bona fide fringe benefit or an hourly cash equivalent thereof.

(iv) If the contractor does not make payments to a trustee or other third person, the contractor may consider as part of the wages of any laborer or mechanic the amount of any costs reasonably anticipated in providing bona fide fringe benefits under a plan or program, provided, that the Secretary of Labor has found, upon the written request of the contractor, that the applicable standards of the Davis-Bacon Act have been met. The Secretary of Labor may require the contractor to set aside in a separate account assets for the meeting of obligations under the plan or program. (Approved by the Office of Management and Budget under OMB Control Number 1215-0140.)

2. **Withholding.** HUD or its designee shall upon its own action or upon written request of an authorized representative of the Department of Labor withhold or cause to be withheld from the contractor under this contract or any other Federal contract with the same prime contractor, or any other Federally-assisted contract subject to Davis-Bacon prevailing wage requirements, which is held by the same prime contractor so much of the accrued payments or advances as may be considered necessary to pay laborers and mechanics, including apprentices, trainees and helpers, employed by the contractor or any subcontractor the full amount of wages required by the contract. In the event of failure to

pay any laborer or mechanic, including any apprentice, trainee or helper, employed or working on the site of the work (or under the United States Housing Act of 1937 for under the Housing Act of 1949 in the construction or development of the project), all or part of the wages required by the contract, HUD or its designee may, after written notice to the contractor, sponsor, applicant, or owner, take such action as may be necessary to cause the suspension of any further payment, advance, or guarantee of funds until such violations have ceased. HUD or its designee may, after written notice to the contractor, disburse such amounts withheld for and on account of the contractor or subcontractor to the respective employees to whom they are due. The Comptroller General shall make such disbursements in the case of direct Davis-Bacon Act contracts.

3. (i) **Payrolls and basic records.** Payrolls and basic records relating thereto shall be maintained by the contractor during the course of the work preserved for a period of three years thereafter for all laborers and mechanics working at the site of the work (or under the United States Housing Act of 1937, or under the Housing Act of 1949, in the construction or development of the project.) Such records shall contain the name, address, and social security number of each such worker, his or her correct classification, hourly rates of wages paid (including rates of contributions or costs anticipated for bona fide fringe benefits or cash equivalents thereof of the types described in Section 1(b)(2)(B) of the Davis-Bacon Act), daily and weekly number of hours worked, deductions made and actual wages paid. Whenever the Secretary of Labor has found under 29 CFR 5.5(a)(1)(iv) that the wages of any laborer or mechanic include the amount of any costs reasonably anticipated in providing benefits under a plan or program described in Section 1(b)(2)(B) of the Davis-Bacon Act, the contractor shall maintain records which show that the commitment to provide such benefits is enforceable, that the plan or program is financially responsible, and that the plan or program has been communicated in writing to the laborers or mechanics affected, and records which show the costs anticipated or the actual cost incurred in providing such benefits. Contractors employing apprentices or trainees under approved programs shall maintain written evidence of the registration of apprenticeship programs and certification of trainee programs, the registration of the apprentices and trainees, and the ratios and wage rates prescribed in the applicable program (Approved by the Office of Management and Budget under OMB Control Numbers 1215-0140 and 1215-0017.)

(ii)(a) The contractor shall submit weekly for each week in which any contract work is performed a copy of all payrolls to HUD or its designee if the agency is a party to the contract, but if the agency is not such a party, the contractor will submit the payrolls to the applicant, sponsor, or owner, as the case may be, for transmission to HUD or its designee. The payrolls submitted shall set out accurately and completely all of the information required to be maintained under 29 CFR Part 5.5(a)(3)(i). This information may be submitted in any form desired. Optional Form WH-347 is available for this purpose and may be purchased from the Superintendent of Documents (Federal Stock Number 029-005-00014-1), US. Government Printing Office, Washington, DC, 20402. The prime contractor is responsible for the submission of copies of payrolls by all subcontractors. (Approved by the Office of Management and Budget under OMB Control Number 1215-0149.)

(b) Each payroll submitted shall be accompanied by a "Statement of Compliance," signed by the contractor or subcontractor or his or her agent who pays or supervises the payment of the persons employed under the contract and shall certify the following:

(1) That the payroll for the payroll period contains the information required to be maintained under 29 CFR Part 5.5(a)(3)(i) and that such information is correct and complete;

(2) That each laborer or mechanic (including each helper, apprentice, and trainee) employed on the contract during the payroll period has been paid the full weekly wages earned, without rebate, either directly or indirectly from the full wages earned, other than permissible deductions as set forth in 29 CFR Part 3;

(c) The weekly submission of a properly executed certification set forth on the reverse side of Optional Form WH-347 shall satisfy the requirement for submission of the "Statement of Compliance" required by paragraph A.3(ii)(b) of this section.

(d) The falsification of any of the above certifications may subject the contractor or subcontractor to civil or criminal prosecution under Section 1001 of Title 18 and Section 231 of Title 31 of the United States Code.

(iii) The contractor or subcontractor shall make the records required under paragraph A.3(i) of this section available for inspection, copying, or transcription by authorized representatives of HUD or its designee or the Department of Labor, and shall permit such representatives to interview employees during working hours on the job. If the contractor or subcontractor fails to submit the required records or to make them available, HUD or its designee may, after written notice to the contractor, sponsor, applicant, or owner, take such action as may be necessary to cause the suspension of any further payment, advance, or guarantee of funds. Furthermore, failure to submit the required records upon request or to make such records available may be grounds for debarment action pursuant to 29 CFR Part 5.12.

4.(i) **Apprentices and Trainees.** Apprentices. Apprentices will be permitted to work at less than the predetermined rate for the work they performed when they are employed pursuant to and individually registered in a bona fide apprenticeship program registered with the US. Department of Labor, Employment and Training Administration, Bureau of Apprenticeship and Training, or with a State Apprenticeship Agency recognized by the Bureau, or if a person is employed in his or her first 90 days of probationary employment as an apprentice in such an apprenticeship program, who is not individually registered in the program, but who has been certified by the Bureau of Apprenticeship and Training or a State Apprenticeship Agency (where appropriate) to be eligible for probationary employment as an apprentice. The allowable ratio of apprentices to journeymen on the job site in any craft classification shall not be greater than the ratio permitted to the contractor as to the entire work force under the registered program. Any worker listed on a payroll at an apprentice wage rate, who is not registered or otherwise employed as

stated above, shall be paid not less than the applicable wage rate on the wage determination for the classification of work actually performed. In addition, any apprentice performing work on the job site in excess of the ration permitted under the registered program shall be paid not less than the applicable wage rate on the wage determination for the work actually performed. Where a contractor is performing construction on a project in a locality other than that in which its program is registered, the ratios and wage rates (expressed in percentages of the journeymen's hourly rate) specified in the contractor's or subcontractor's registered program shall be observed. Every apprentice must be paid at not less than the rate specified in the registered program for the apprentice's level of progress, expressed as a percentage of the journeymen hourly rate specified in the applicable wage determination. Apprentices shall be paid fringe benefits in accordance with the provisions of the apprenticeship program. If the apprenticeship program does not specify fringe benefits, apprentices must be paid the full amount of fringe benefits listed on the wage determination for the applicable classification.

If the Administrator determines that a different practice prevails for the applicable apprentice classification, fringes shall be paid in accordance with that determination. In the event the Bureau of Apprenticeship and Training, or a State Apprenticeship Agency recognized by the Bureau, withdraws approval of an apprenticeship program, the contractor will no longer be permitted to utilize apprentices at less than the applicable predetermined rate for the work performed until an acceptable program is approved.

(ii) **Trainees.** Except as provided in 29 CFR 5.16, trainees will not be permitted to work at less than the predetermined rate for the work performed unless they are employed pursuant to and individually registered in a program which has received prior approval, evidenced by formal certification by the US. Department of Labor, Employment and Training Administration. The ratio of trainees to journeymen on the job site shall not be greater than permitted under the plan approved by the Employment and Training Administration. Every trainee must be paid at not less than the rate specified in the approved program for the trainee's level of progress, expressed as a percentage of the journey hourly rate specified in the applicable wage determination. Trainees shall be paid fringe benefits in accordance with the provisions of the trainee program. If the trainee program does not mention fringe benefits, trainees shall be paid the full amount of fringe benefits listed on the wage determination unless the Administrator of the Wage and Hour Division determines that there is an apprenticeship program associated with the corresponding journeyman wage rate on the wage determination which provides for less than full fringe benefits for apprentices. Any employee listed on the payroll at a trainee rate who is not registered and participating in a training plan approved by the Employment and Training Administration shall be paid not less than the applicable wage rate on the wage determination for the work actually performs. In addition, any trainee performing work on the job site in excess of the ration permitted under the registered program shall be paid not less than the applicable wage rate on the wage determination for the work actually performed. In the event the Employment and Training Administration withdraws approval of a training program, the contractor will no longer

be permitted to utilize trainees at less than the applicable predetermined rate for the work performed until an acceptable program is approved.

(iii) **Equal employment opportunity.** The utilization of apprentices, trainees and journeymen under this part shall be in conformity with the equal employment opportunity requirements of Executive Order 11246, as amended, and 29 CFR Part 30.

5. **Compliance with Copeland Act requirements.** The contractor shall comply with the requirements of 29 CFR Part 3 which are incorporated by reference in this contract.

6. **Subcontracts.** The contractor or subcontractor will insert in any subcontracts the clauses contained in 29 CFR 5.5(a)(1) through (10) and such other clauses as HUD or its designee may be appropriate instructions require, and also a clause requiring the subcontractors to include these clauses in any lower tier subcontracts. The prime contractor shall be responsible for the compliance by any subcontractor or lower tier subcontractor with all the contract clauses in 29 CFR Part 5.5.

7. **Contract termination:** debarment. A breach of the contract clauses in 29 CFR 5.5 may be grounded for termination of the contract, and for debarment as a contractor and a subcontractor as provided in 29 CFR 5.12.

8. **Compliance with Davis-Bacon and Related Act Requirements.** All rulings and interpretations of the Davis-Bacon and Related Acts contained in 29 CFR Parts 1, 3, and 5 are herein incorporated by reference in this contract.

9. **Disputes concerning labor standards.** Disputes arising out of a labor standards provision of this contract shall to be subject to the general disputes clause of this contract. Such disputes shall be resolved in accordance with the procedures of the Department of Labor set forth in 29 CFR Parts 5, 6 and 7. Disputes within the meaning of this clause include disputes between the contractor (or any of its subcontractors) and HUD or its designee, the US. Department of Labor, or the employees or their representatives.

10. (i) **Certification of Eligibility.** By entering into this contract, the contractor certifies that neither it (nor he or she) nor any person or firm who has an interest in the contractor's firm is a person or firm ineligible to be awarded Government contracts by virtue of Section 3(a) of the Davis-Bacon Act or 29 CFR 5.12(a)(1) or to be awarded HUD contracts or participate in HUD programs pursuant to 24 CFR Part 24.

(ii) No part of this contract shall be subcontracted to any person or firm ineligible for award of a Government contract by virtue of Section 3(a) of the Davis-Bacon Act or 29 CFR 5.12(a)(1) or to be awarded HUD contracts or participate in HUD programs pursuant to 24 CFR Part 24.

(iii) The penalty for making false statements is prescribed in the US. Criminal Code, 18 U.S.C. 1001. Additionally, US. Criminal Code, Section 1010, Title 18, U.S.C., "Federal Housing Administration transactions", provides in part: "Whoever, for the purpose of

...influencing in any way the action of such Administration...makes, utters or publishes any statement, knowing the same to be false...shall be fined not more than $5,000 or imprisoned not more than two years, or both."

11. **Complaints, Proceedings, or Testimony by Employees.** No laborer or mechanic to whom the wage, salary, or other labor standards provisions of this Contract are applicable shall be discharged or in any other manner discriminated against by the Contractor or any subcontractor because such employee has filed any complaint or instituted or caused to be instituted any proceeding or has testified or is about to testify in any proceeding under or relating to the labor standards applicable under this Contract to his employer.

B. **Contract Work Hours and Safety Standards Act.** As used in this paragraph, the terms "laborers" and "mechanics" include watchmen and guards.

(1) **Overtime requirements:** No contractor or subcontractor contracting for any part of the contract work may require or involve the employment of laborers or mechanics shall require or permit any such laborer or mechanic in any workweek in which he or she is employed on such work to work in excess of forty hours in such workweek unless such laborer or mechanic receives compensation at a rate not less than one and one-half times the basic rate of pay for all hours worked in excess of forty hours in such workweek.

(2) **Violation:** liability for unpaid wages, liquidated damages. In the event of any violation of the clause set forth in subparagraph (1) of this paragraph, the contractor and any subcontractor responsible therefore shall be liable for the unpaid wages. In addition, such contractor and subcontractor shall be liable to the United States (in the case of work done under contract for the District of Columbia or a territory, to such District or to such territory), for liquidated damages. Such liquidated damages shall be computed with respect to each individual laborer or mechanic, including watchmen and guards, employed in violation of the clause set forth in subparagraph (1) of this paragraph, in the sum of $10 for each calendar day on which such individual was required or permitted to work in excess of the standard workweek of forty hours without payment of the overtime wages required by the clause set forth in subparagraph (1) of this paragraph.

(3) **Withholding for unpaid wages and liquidated damages:** HUD or its designee shall upon its own action or upon written request of an authorized representative of the Department of Labor withhold or cause to be withheld, from any money payable on account of work performed by the contractor or subcontractor under any such contract or any other Federal contract with the same prime contractor such sums as may be determined to be necessary to satisfy any liabilities of such contractor or subcontractor for unpaid wages and liquidated damages as provided in the clause set forth in subparagraph (2) of this paragraph.

(4) **Subcontracts:** The contractor or subcontractor shall insert in any subcontracts the clauses set forth in subparagraph (1) through (4) of this paragraph and also a clause requiring the subcontractors to include these clauses in any lower tier subcontracts. The prime contractor shall be responsible for compliance by any subcontractor or lower tier

subcontractor with the clauses set forth in subparagraphs (1) through (4) of this paragraph.

C. **Health and Safety**

(1) No laborer or mechanic shall be required to work in surroundings or under working conditions which are unsanitary, hazardous, or dangerous to his health and safety as determined under construction safety and health standards promulgated by the Secretary of Labor by regulation.

(2) The Contractor shall comply with all regulations issued by the Secretary of Labor pursuant to Title 29 Part 1926 (formerly part 1518) and failure to comply may result in imposition of sanctions pursuant to the Contract Work Hours and Safety Standards Act (Public Law 91-54, 83 Stat. 96).

(3) The Contractor shall include the provisions of this Article in every subcontract so that such provisions will be binding on each subcontractor. The Contractor shall take such action with respect to any subcontract as the Secretary of Housing and Urban Development or the Secretary of Labor shall direct as a means of enforcing such provisions.

ACCEPTABLE ALTERNATE WORK SHEET FOR CONTRACTOR CERTIFICATION REGARDING DEBARMENT, SUSPENSION, INELIGIBILITY AND VOLUNTARY EXCLUSION (LOWER-TIER PARTICIPANT) FOR HUD PROGRAMS

Certification regarding Debarment, Suspension, Ineligibility and Voluntary Exclusion-Lower-Tier Covered Transactions pursuant to 24 Code of Federal Regulations, Part 24.510(b).

1. By signing and submitting this proposal, the prospective lower-tier participant certifies that neither it, its principals nor affiliates, is presently debarred, suspended, proposed for debarnent, declared ineligible, or voluntarily excluded from participation in this transaction by any Federal department or agency. Further, the Participant provides the certification set out below.

2. The certification in this clause is a material representation of fact upon which reliance was placed when this transaction was entered into. If it is later determined that an erroneous certification was rendered, in addition to other remedies available to the Federal Government, the Department or agency with which this transaction originated may pursue available remedies.

3. Further, the Participant shall provide immediate written notice to the person to which this proposal is submitted if at any time the Participant learns that this certification was erroneous when submitted or has become erroneous by reason of changed circumstances.

4. By submitting this proposal, it is agreed that should the proposed covered transaction be entered into, the Participant will not knowingly enter into any lower-tier covered transaction with a person who is debarred, suspended, declared ineligible, or voluntarily excluded from participation in this covered transaction unless authorized by the agency with which this transaction originated.

5. It is further agreed that by submitting this proposal, the Participant will include this Certification, without modification, in all lower-tier covered transactions and in all solicitations for lower-tier covered transactions.

Contractor Name_____ Date_____

Title_____ Address_____

City_____ State_____ Zip_____

NON-CERTIFICATION:

As the perspective lower-tier participant, I am unable to certify to statements in this Certification as explained in the attachment to this proposal.

Contractor Name_____ Date_____

Title_____ Address_____

City_____ State_____ Zip_____

The penalty for making false statements is prescribed in the U.S. Criminal Code, 18 U.S.C. 1001.

PERFORMANCE, PAYMENT and BID BONDS

Contract Performance and Payment Bonds issued in the full amount of the contract are required by federal procurement rules if the contract is for $100,000 or more.

A Bid Bond or other security is required by federal rules whenever the contract is for $100,000 or more.

Generally these bonds must be issued by a surety company satisfactory to the local government, qualified to do business in Georgia, and in a format meeting the federal and state legal requirements. The bonding company must also appear on the "List of Acceptable Sureties" published annually by the US Department of the Treasury.

DCA recommends that CDBG Recipients be sure to assign responsibility for reviewing construction bonds. This job may be given to the local attorney, the grant administrator, or the project architect/engineer. Specific duties include verification that the agent is licensed y the state and authorized by the bonding company and verification through the Insurance Commissioner that the company is financially sound and licensed in Georgia. The actual bond should also be reviewed and verified as being valid.

COMPLIANCE WITH CLEAN AIR AND WATER ACTS

The contract is subject to the requirements of the Clean Air Act, as amended, 42 USC 1857 et. seq., and the regulations of the Environmental Protection Agency with respect thereto, at 40 CFR Part 15, as amended from time to time.

In compliance with said regulations:

1.) The Contractor shall require of subcontractors that any facility to be utilized in the performance of any nonexempt contract or subcontract is not listed on the List of Violating Facilities issued by the Environmental Protection Agency (EPA) pursuant to 4C CFR 15.20.

2.) The Contractor will comply with all the requirements of Section 114 of the Clean Air Act, as amended, (42 USC 1857c-8) and section 308 of the Federal Water Pollution Control Act as amended, (330 USC 1318) relating to inspection, monitoring, entry, reports, and information, as well as all other requirements specified in said section 114 and section 308, and all regulations and guidelines issued thereunder.

3.) The Contractor will provide prompt notice of any notification received from the Director, Office of Federal Activities, EPA, indicating that a facility utilized or to be utilized for the contract is under consideration to be listed on the EPA List of Violating Facilities.

4.) The Contract will include or cause to be included the criteria and requirements to paragraph (1) through (4) of this section in every nonexempt subcontract and take such action as the Government will direct as a means of enforcing such provisions.

Debarment and Suspension (Executive Orders 12549 and 12689)—A contract award (see 2 CFR 180.220) must not be made to parties listed on the governmentwide exclusions in the System for Award Management (SAM), in accordance with the OMB guidelines at 2 CFR 180 that implement Executive Orders 12549 (3 CFR part 1986 Comp., p. 189) and 12689 (3 CFR part 1989 Comp., p. 235), "Debarment and Suspension." SAM Exclusions contains the names of parties debarred, suspended, or otherwise excluded by agencies, as well as parties declared ineligible under statutory or regulatory authority other than Executive Order 12549.

Byrd Anti-Lobbying Amendment (31 U.S.C. 1352)—Contractors that apply or bid for an award exceeding $100,000 must file the required certification. Each tier certifies to the tier above that it will not and has not used Federal appropriated funds to pay any person or organization for influencing or attempting to influence an officer or employee of any agency, a member of Congress, officer or employee of Congress, or an employee of a member of Congress in connection with obtaining any Federal contract, grant or any other award covered by 31 U.S.C. 1352. Each tier must also disclose any lobbying with non-Federal funds that takes place in connection with obtaining any Federal award. Such disclosures are forwarded from tier to tier up to the non-Federal award.

A non-Federal entity that is a state agency or agency of a political subdivision of a state and its contractors must comply with section 6002 of the **Solid Waste Disposal Act**, as amended by the Resource Conservation and Recovery Act. The requirements of Section 6002 include procuring only items designated in guidelines of the Environmental Protection Agency (EPA) at 40 CFR part 247 that contain the highest percentage of recovered materials practicable, consistent with maintaining a satisfactory level of competition, where the purchase price of the item exceeds $10,000 or the value of the quantity acquired during the preceding fiscal year exceeded $10,000; procuring solid waste management services in a manner that maximizes energy and resource recovery; and establishing an affirmative procurement program for procurement of recovered materials identified in the EPA guidelines.

Rights to Inventions Made Under a Contract or Agreement. If the Federal award meets the definition of "funding agreement" under 37 CFR §401.2 (a) and the recipient or subrecipient wishes to enter into a contract with a small business firm or nonprofit organization regarding the substitution of parties, assignment or performance of experimental, developmental, or research work under that "funding agreement," the recipient or subrecipient must comply with the requirements of 37 CFR Part 401, "Rights to Inventions Made by Nonprofit Organizations and Small Business Firms Under Government Grants, Contracts and Cooperative Agreements," and any implementing regulations issued by the awarding agency.

INDEX

- Exhibit A - Mandatory Bid Response Sheet
- Exhibit C - Mandatory Cost Proposal
- Exhibit D – Not required for ITBs
- Exhibit E - Not required for ITBs
- Exhibit F - Mandatory S.A.V.E. Program Affidavit
- Exhibit G - Mandatory Cone-of-Silence Affidavit
- Exhibit H - Mandatory Completed W-9 Form
- Exhibit I – Mandatory E-Verify Affidavit
- Exhibit J – Contractor Ethics Affidavit
- Exhibit K – Signed Contract Document
- Copy of Business License
- General Contractor License
- Copy of Certificate of Insurance
- Letter of Bondability
- List of Intended Subcontractors

Exhibit A - Mandatory Bid Response Sheet

HALL COUNTY
GEORGIA
We have it all in Hall

POST OFFICE DRAWER 1435
GAINESVILLE, GA 30503

t: 770.535.8270 | f: 770.531.6711

DIRECTOR
Wesley Geddings

Hall County Government
FINANCIAL SERVICES

EXHIBIT A

MANDATORY BID RESPONSE FORM

This section must be completed and returned with the bid by the Bidder

By submitting a proposal, the respondent certifies that it has fully read and understands the proposal and has full knowledge of the scope, nature, and quality of work to be performed. The services offered and the cost factor must be valid for at least one-hundred and twenty (120) days from date of signature.

Date of Bid Submittal: _ June 01, 2023 ___ **IFB #** 056-43

Bid Name: GENERAL CONTRACTOR FOR HIRE

Affirmation: Bidder affirms the following by affixing a wet signature in blue ink below:

> **"I agree to abide by all terms and conditions of this IFB and certify that I am authorized to sign this bid".**

Bidder Signature: _____ Date: _____

Print Name: __ Jared Penny _____

Title: _____ President _____

Attested by: _____ Date: _____

Print Name: ___ John Treadway _____

Mobile Number: 678-739-6202 Email Address: johnt@pencorconstruction.com

Physical Address: 12150 Morris Rd., Alpharetta, GA 30005

Physical Address 2: _____

Acknowledge receipt of all issued addenda (if any) by listing their numbers and date of issuance below:

Bids not signed may be declared as "Non-Responsive" and will not be evaluated.

If you desire to submit a "No Bid" then please indicate by checking one or both of the reasons listed below and explain.

_____ Bidder does not offer this service

_____ Unable to meet specifications

_____ Remove my company name from the bidder's list

PENCOR CONSTRUCTION

Acknowledge receipt of all issued addenda (if any) by listing their numbers and date of issuance below:

Addendum No: **ONE**	Date: May 8, 2023
Addendum No: **TWO**	Date: May 23,2023
Addendum No: _____	Date: _____
Addendum No: _____	Date: _____

EXHIBIT C

IFB # 056-43

GENERAL CONTRACTOR FOR HIRE

MANDATORY COST PROPOSAL WORKSHEET

Company Name: **Pencor LLC**

Bidder's Name: **Jared Penny**

Bidder's Signature:

Date: **June 01, 2023**

Instructions: Complete the lump sum totals below

Furnish and Install all materials, equipment, supervision and labor to complete the project to occupancy.

Line	GMP Lump-Sum
General Contractor Services for New Gymnasium Construction	$ 2,474,740.00

*Guaranteed Maximum Price

Exhibit C - Mandatory Cost Proposal Worksheet

A. **ALLOWANCES:** To provide **as a part of the Base Bid** an allowance for sum total of all work related to the below outlined.

Unsuitable materials shall be defined as:

1. Substances not capable of being compacted to the density specified,
2. Rock material larger than ½ cubic foot in volume,
3. Debris and organic material. Such materials shall be determined by the Owner's Geotechnical Testing Agency;
4. Materials which are not suitable for use on this project;
5. Unsuitability for sale of materials to third parties is not included in this definition.

Soil material which is too wet to permit the specified compaction but is still suitable to be used in structural capacity (once dried) based on the recommendations of the soils testing agency, shall be spread and permitted to dry in an area to be designated by the Architect. Contractor shall assist drying by discing, harrowing or pulverizing until the soil moisture content is reduced to the specified value. Only excavation of soil which is wet due to a concealed condition, including, but not limited to, underground springs, high water table and leaking pipes, shall be addressed as a potential additive change order. Suitable materials which are wet due to precipitation as determined by the Owner's Testing Agency shall be dried as specified and reused at no additional cost.

Allowances in Base Bid:

1. Excavate, transport, place, and compact suitable structural fill from onsite to obtain the proposed finished grades indicated on the design documents

500 CY @ $ 10 /CY = _$ 5,000

2. Haul in suitable structural fill from offsite source, transport, place, and compact onsite to obtain proposed finished grades indicated on the design documents

500 CY @ $ 35 /CY = _$ 17,500

3. Haul off Suitable structural fill from the site to obtain proposed finished grades as indicated o the design documents

500 CY @ $ 35 /CY = _$ 17,500

4. Strip and Remove topsoil from Site.

800 CY @ $ 10 /CY = _$ 8,000

5. Haul in and distribute 4" of topsoil to all unpaved areas

800 CY @ $ 5.50 /CY = _$ 4,400

6. Clear and grub the proposed site within the limits of disturbance indicated on the design documents. 1.00 acres @ $ 8,500 /acre = _$ 8,500

7. Demolish and remove existing items indicated on the design documents and haul from site.

1.00 acres @ $ 25,000 /acres = _$ 25,000

8. Locate all Utilities within the limits of disturbance (both horizontally and Vertically)

1.00 acre @ $ 5,000 /acre = $ 5,000

9. Relocate/adjust Utility boxes, traffic control boxes and/or appurtenances as required to install the proposed design Concept depicted on the construction documents. This includes any permitting, fees, and/or coordination with the utility provider that may be required.

Lum Sum of $ 13,500

B. UNIT PRICES (not in Base Bid): To adjust the Contract amount based on the requirements of Section 012200: UNIT PRICES, if necessary, by the following amounts

The undersigned bidder agrees to provide additional work, if added, or to delete specified work, if requested, at the unit prices listed unless such prices have been equitably adjusted by the Architect as previously stated. The unit prices include charges for fee, layout, supervision (field, and home office), general expense, taxes, insurance, labor burden overhead and profit.

Unit Prices

1. Furnish and install a non-woven geotextile fabric suitable for filtration in conjunction with #57 stone stabilization…….....$ 3 /sy

2. Furnish and install a woven geotextile fabric suitable for heavy duty traffic over earth subgrade in conjunction with #57 stone stabilization…….....$ 3 /sy

3. Furnish and install stone stabilization base materials including:
   a. Graded Aggregate Base…….. $ 49 /cuft
   b. Gravel (#57 Stone)…….. $ 57 /cuft
   c. Stone (#8)……..……...$ 38 /cuft
   d. Granular Bedding……$ 48 /cuft
   e. Sand (rounded)……$ 26 /cuft
   f. Sand (angular)……..$ 32 /cuft
   g. Stone (#2)……..$ 42 /cuft
   h. Rip Rap (3” dia)……$ 55 /cuft
   i. Rip Rap (6” dia)……$ 65 /cuft
4. Furnish and install storm/sanitary sewer cleanout outside of pavement…… $ 1200 /vf
5. Furnish and install storm/sanitary sewer cleanout within paved area…… $ 1200 /vf
5. Furnish and install pipe materials including:

a. 4"Ø Class 50 D.I.P. w/Class ‘C’ bedding

1. 4' deep to 8' deep ..... $ 25 /lf
2. 8' deep to 12' deep ..... $ 50 /lf

b. 6"Ø Class 50 D.I.P. w/Class ‘C’ bedding

1. 4' deep to 8' deep ..... $ 35 /lf
2. 8' deep to 12' deep ..... $ 60 /lf

c. 8"Ø Class 50 D.I.P. w/Class ‘C’ bedding

1. 4' deep to 8' deep ..... $ 50 /lf
2. 8' deep to 12' deep ..... $ 100 /lf

d. Trench Drain (Stnd. Duty)

1. 0' deep to 4' deep ..... $ 60 /lf

e. 6"Ø Schedule 40 PVC

1. 4' deep to 8' deep ..... $ 15 /lf
2. 8' deep to 12' deep ..... $ 30 /lf

f. 8"Ø Schedule 40 PVC

1. 4' deep to 8' deep ..... $ 20 /lf

2. 8' deep to 12' deep .....$ 40 /lf

g. 24"Ø HDPE

1. 4' deep to 8' deep .....$ 25 /lf

2. 8' deep to 12' deep .....$ 50 /lf

* Cost shall include all appurtenances, including fittings, bands, wyes, etc. and all appurtenant details.

6. Furnish and install:

a. Precast 48" diameter concrete storm drainage structure $ 465 /vf
b. Doghouse Manhole section $ 4,500 /ea
c. Heavy-duty cast-iron drop inlet grate and frame. $ 450 /set
d. Cast iron ring and MH cover as per City Standards $ 800 /set

7.Furnish and install Georgia D.O.T. Type C Erosion Control Silt Fence .....$ 9 /lf

8. Adjust existing Manhole lid to finished grade elevation……...$ 650 /ea.

9. Furnish and Install heavy Duty Concrete paving……..$ 18 /sf

10. Furnish and Install Asphalt Paving in the Right Way Per City Stnd $ 65 /sy

11. Furnish and Install Concrete Curb……$ 23 /lf

16. Furnish and install GDOT standard Vehicular Guard Railing (W beam)$ 150 /lf

17. Furnish and install Fire hydrant assembly with 6" valve……$ 8,500 /ea.

18. Fill and compact with suitable soils acquired on-site to replace unsuitable soils removal …….. $ 25 /cy

19. Fill and compact with suitable soils acquired off-site to replace unsuitable soils removed ……..$ 45 /cy

20. Excavate materials determined to be unsuitable by the Owner's Test Agency and redistribute on the site …… $ 35 /cy

21. Excavate materials determined to be unsuitable by the Owner's Testing Agency and dispose of legally offsite……..$ 55 /cy

22. Excavate materials determined to be Trench rock, and removal from site ……$ 145 /cy

23. Excavate materials determined to be Mass rock, and removal from site ……. $ 145 /cy

24. Fill and compact with suitable soils acquired off-site to replace trench rock removal …….. $ 45 /cy

25. Fill and compact with suitable soils acquired off-site to replace Mass rock removed …….$ 45 /cy

27. Furnish install and Maintain APS 600 series silt stop as manufactured by Applied Polymer Systems, Norcross, Georgia or approved equal at a rate of 1.5 gallons per acre in a hydro-seeder mix of appropriate seed, fertilizer, lime and mulch for the same acre. Follow all manufacturer's instruction and recommendations. Do not mechanically disturb treated areas after application …….. $ 3 /sf

28. Furnish install and Maintain APS 700 series silt stop as manufactured by Applied Polymer Systems, Norcross, Georgia or approved equal…… $ 3 /sf

29. Furnish, install and maintain Erosion and Sediment Control Silt Fence (Sd-s) ……$ 9 /lf

30. Furnish, install and maintain Erosion and Sediment Control Inlet Sediment Trap (Sd2) …….. $ 550 /ea

31. Furnish, install and maintain Erosion and Sediment Control Matting Blanket (Mb) ……$ 3 /sy

32. Furnish and Install 8" DIP water line within the Right of Way of Memorial Park Drive by Jack and Bore with 16" steel casing per City Standard. ……$ 1,078 /lf

33. Furnish and Install 8" DIP water line within the Right of Way of Memorial Park Drive by open cut per City Standard ……..……$ 1,399 /lf

END OF SECTION

Exhibit C - Mandatory Cost Proposal Worksheet

III. CIVIL CLARIFICATIONS, ITEM NO. 4

Provide separate line-item pricing for all anticipated equipment, materials, and labor associated with the proposed construction of the fire line from the proposed tap in the right of way to within 5' of the standpipe in the Proposed building mechancial room. This includes but is not limited to ductile iron fire line piping, taps, bends, blocking, fire department connections, post indicator valve, bore and casing under Memorial Park Drive tap, shoring, traffic control, labor required testing and other necessary appurtenances.

SCOPE ITEMS		SUB-TOTAL
8" DIP	$	53,550
8" x 8" Tapping Sleeve & Valve Assembly	$	8,000
8" Hall County Meter & Backflow Vault Assembly	$	62,340
8" Gate Valve Assembly	$	8,000
8" Solid Sleeve	$	1,180
8" Fire Riser	$	5,500
PIV	$	4,500
Fire Hydrant and Valve Assembly	$	7,050
Miscellaneous Connections (Bends / Tees)	$	10,000
Loose Material / Concrete / 57 Stone	$	55,000
Thrust block	$	5,500
Jack and Bore	$	35,000
Design / Permitting	$	4,596
Erosion Control	$	17,500
Traffic Control	$	12,500
Sawcut and Paving	$	70,990
Trench Box / Shoring	$	10,000
Fire Line Test / Chlorination	$	5,000
Temporary Fencing	$	10,000
GC's / Fee / Insurance / Bond	$	66,473
Tap Fees Excluded Per Addendum1	$	-
TOTAL:	**$**	**452,679**

DEDUCTIVE ALTERNATE - EMERGENCY RESPONDER RADIO COVERAGE PER BID DOCUMENTS

Deductive Alternate to remove the **BDA / ERRC System** from the Base Bid, if it is determined that the system is not required at this location.	**DEDUCT:**	**$ 45,679**

Exhibit D – Not required for ITBs

Per Invitation to bid Section 2.9, not required for ITB's.

Exhibit E - Not required for ITBs

Per Invitation to bid Section 2.9, not required for ITB's.

HALL COUNTY
GEORGIA

POST OFFICE DRAWER 1435
GAINESVILLE, GA 30503

t: 770.535.8270 | f: 770.531.6711

DIRECTOR
Wesley Geddings

EXHIBIT F
MANDATORY S.A.V.E. AFFIDAVITS

INSTRUCTIONS FOR
S.A.V.E Program Affidavit

Systematic Alien Verification for Entitlements (SAVE) Program
Office of U.S. Citizenship and Immigration Service (USCIS).

Background

Pursuant to the "Georgia Security and Immigration Compliance Act," Hall County cannot contract for the physical performance of services unless the contractor registers and participates in the federal work authorization program to verify information of all new employees. Neither may any contractor or sub-contractor enter a contract with the County in connection with the physical performance of services unless the contractor or sub-contractor registers and participates in the federal work authorization program to verify information of all new employees. O.C.G.A. § 13-10-91. Each contractor is urged to fill out the affidavit below stating they comply with this Georgia Compliance Act before Hall County can legally accept the bids from each contractor/vendor.

To register for the E-Verify Program, please visit www.uscis.gov . Your bid will not be accepted without this E-Verify Number.

Procedure:

Affirmative language will be set forth in contracts for the performance of services regarding the above requirement. The County will require an affidavit from a contractor showing its compliance with the requirements of O.C.G.A. § 13-10-91 at the time a contract for the performance of physical services is executed. The contract shall include language referencing this obligation and providing that failure to supply an affidavit evidencing such compliance (or to continue to meet the statutory obligation during the life of the contract) shall constitute a material breach of the contract. Upon notice of such breach, the contractor shall be entitled to cure the breach within ten (10) days and provide evidence of such cure. Should the breach not be cured, the County should be entitled to all available remedies, including termination of the contract and damages.

Prime Contractor's must obtain a signed and notarized SAVE document for each sub-contractor utilized on this project.

[Affidavits and signature pages follow]

HALL COUNTY
GEORGIA

EXHIBIT F
MANDATORY S.A.V.E. AFFIDAVITS

S.A.V.E Program PRIME CONTRACTOR Affidavit Under O.C.G.A. § 13-10-91(b) (1)

Systematic Alien Verification for Entitlements (SAVE) Program Office of U.S. Citizenship and Immigration Service (USCIS).

POST OFFICE DRAWER 1435
GAINESVILLE, GA 30503

t: 770.535.8270 | f: 770.531.6711

DIRECTOR
Wesley Geddings

By executing this affidavit, the undersigned contractor verifies its compliance with O.C.G.A. § 13-10-91, stating affirmatively that the individual, firm or corporation which is contracting with Hall County, Georgia, has registered and is participating in a federal work authorization program* (an electronic verification of work authorization program operated by the U.S. Department of Homeland Security or any equivalent federal work authorization program operated by the U.S. Department of Homeland Security to verify information of newly hired employees, pursuant to the Immigration Reform And Control Act of 1986 (IRCA), in accordance with the deadlines established in the referenced statute.

Furthermore, the undersigned contractor will continue to use the federal work authorization program throughout the contract period and the undersigned contractor will contract for the physical performance of services in satisfaction of such contract only with subcontractors who present an affidavit to the contractor with the information required by O.C.G.A. § 13-10-91(b). Contractor hereby attests that its federal work authorization user identification (E-Verify) number and date of authorization are as follows:

**The applicable federal work authorization program as of the effective date of the statute is the E-Verify Program of the Systematic Alien Verification for Entitlements (SAVE) Program Office of U.S. Citizenship and Immigration Service (USCIS). To register for the E-Verify Program visit-www.uscis.gov .your bid will not be accepted without this E-Verify Number.*

Pencor LLC
Name of Prime Contractor

1741688 Enrolled 9/24/2021
Contractor's/Vendor's E-Verify #

12150 Morris Rd
Street Address

Alpharetta, GA
City / State

Signature of Authorized Officer or Agent

May 30, 2023
Date of Authorization

Jared C. Penny President
Printed Name/Title of Authorized Officer

JFW Boys and Girls Club Gym
Name of Project

Subscribed and sworn before me on this the
30th Day of May, 2023

Notary Public

My Commission Expires: 2-24-25

John Treadway
Dawson County, GA

JOHN TREADWAY NOTARY PUBLIC DAWSON COUNTY EXPIRES GEORGIA 2/24/2025

HALL COUNTY
GEORGIA
*We have it **all** in Hall*

POST OFFICE DRAWER 1435
GAINESVILLE, GA 30503

t: 770.535.8270 | f: 770.531.6711

DIRECTOR
Wesley Geddings

Hall County Government
FINANCIAL SERVICES

EXHIBIT G
Mandatory Cone-of-Silence Affidavit

In order to ensure fair consideration for all bidder's responding to the County's Request for Qualifications and Cost Proposals, the County requires that all bidders firms, companies, agents, or other Respondents to the Solicitation refrain from discussions privately or publicly during the Solicitation process. This includes all staff, employees, subcontractors, as well as paid or unpaid personnel acting on the firm's behalf shall not contact nor participate in any type of contact with County employees, department heads or elected officials, up to and including the County Administrator and Board of Commissioners.

Therefore, the County issues this "Cone of Silence" that shall be in effect from the date the solicitation is publicly advertised, until the time an award decision has been approved by the Board of Commissioners and fully executed by all parties. Contact should only be between the bidding firms and the Issuing Officer/Buyer listed in the Solicitation documents.

Any such contact may be considered as collusion and may result in the bidder being disqualified from participation and consideration for award. All contact must be coordinated through the Issuing Officer, for the procurement of these products and/or services.

Please reference the Solicitation number on all correspondence to the County. Any oral communications shall be considered unofficial and non-binding.

Only written responses to written communication shall be considered official and binding upon the County. The County reserves the right, at its sole discretion, to determine appropriate and adequate responses to the written comments, questions, and requests for clarification.

Bidder Attestment:

I understand and shall fully comply with the above requirements.

Signed: Jared Penny

Typed Name: Jared Penny

Job Title: President

Company: Pencor LLC

Date: May 30, 2023

Exhibit H - Mandatory Completed W-9 Form

Form **W-9**
(Rev. October 2018)
Department of the Treasury
Internal Revenue Service

Request for Taxpayer Identification Number and Certification

▶ Go to *www.irs.gov/FormW9* for instructions and the latest information.

Give Form to the requester. Do not send to the IRS.

Print or type. See Specific Instructions on page 3.

1 Name (as shown on your income tax return). Name is required on this line; do not leave this line blank.
Pencor LLC

2 Business name/disregarded entity name, if different from above

3 Check appropriate box for federal tax classification of the person whose name is entered on line 1. Check only **one** of the following seven boxes.

☐ Individual/sole proprietor or single-member LLC ☐ C Corporation ☐ S Corporation ☐ Partnership ☐ Trust/estate

☑ Limited liability company. Enter the tax classification (C=C corporation, S=S corporation, P=Partnership) ▶ S

Note: Check the appropriate box in the line above for the tax classification of the single-member owner. Do not check LLC if the LLC is classified as a single-member LLC that is disregarded from the owner unless the owner of the LLC is another LLC that is **not** disregarded from the owner for U.S. federal tax purposes. Otherwise, a single-member LLC that is disregarded from the owner should check the appropriate box for the tax classification of its owner.

☐ Other (see instructions) ▶

4 Exemptions (codes apply only to certain entities, not individuals; see instructions on page 3):
Exempt payee code (if any) _____
Exemption from FATCA reporting code (if any) _____
(Applies to accounts maintained outside the U.S.)

5 Address (number, street, and apt. or suite no.) See instructions.
12150 Morris Rd

Requester's name and address (optional)

6 City, state, and ZIP code
Alpharetta, GA 30005

7 List account number(s) here (optional)

Part I Taxpayer Identification Number (TIN)

Enter your TIN in the appropriate box. The TIN provided must match the name given on line 1 to avoid backup withholding. For individuals, this is generally your social security number (SSN). However, for a resident alien, sole proprietor, or disregarded entity, see the instructions for Part I, later. For other entities, it is your employer identification number (EIN). If you do not have a number, see *How to get a TIN,* later.

Note: If the account is in more than one name, see the instructions for line 1. Also see *What Name and Number To Give the Requester* for guidelines on whose number to enter.

Social security number
[ ][ ][ ] - [ ][ ] - [ ][ ][ ][ ]

or

Employer identification number
8 1 - 2 2 3 8 6 3 6

Part II Certification

Under penalties of perjury, I certify that:

1. The number shown on this form is my correct taxpayer identification number (or I am waiting for a number to be issued to me); and
2. I am not subject to backup withholding because: (a) I am exempt from backup withholding, or (b) I have not been notified by the Internal Revenue Service (IRS) that I am subject to backup withholding as a result of a failure to report all interest or dividends, or (c) the IRS has notified me that I am no longer subject to backup withholding; and
3. I am a U.S. citizen or other U.S. person (defined below); and
4. The FATCA code(s) entered on this form (if any) indicating that I am exempt from FATCA reporting is correct.

Certification instructions. You must cross out item 2 above if you have been notified by the IRS that you are currently subject to backup withholding because you have failed to report all interest and dividends on your tax return. For real estate transactions, item 2 does not apply. For mortgage interest paid, acquisition or abandonment of secured property, cancellation of debt, contributions to an individual retirement arrangement (IRA), and generally, payments other than interest and dividends, you are not required to sign the certification, but you must provide your correct TIN. See the instructions for Part II, later.

Sign Here Signature of U.S. person ▶ [signature] Date ▶ 2/1/2023

General Instructions

Section references are to the Internal Revenue Code unless otherwise noted.

Future developments. For the latest information about developments related to Form W-9 and its instructions, such as legislation enacted after they were published, go to *www.irs.gov/FormW9.*

Purpose of Form

An individual or entity (Form W-9 requester) who is required to file an information return with the IRS must obtain your correct taxpayer identification number (TIN) which may be your social security number (SSN), individual taxpayer identification number (ITIN), adoption taxpayer identification number (ATIN), or employer identification number (EIN), to report on an information return the amount paid to you, or other amount reportable on an information return. Examples of information returns include, but are not limited to, the following.

- Form 1099-INT (interest earned or paid)
- Form 1099-DIV (dividends, including those from stocks or mutual funds)
- Form 1099-MISC (various types of income, prizes, awards, or gross proceeds)
- Form 1099-B (stock or mutual fund sales and certain other transactions by brokers)
- Form 1099-S (proceeds from real estate transactions)
- Form 1099-K (merchant card and third party network transactions)
- Form 1098 (home mortgage interest), 1098-E (student loan interest), 1098-T (tuition)
- Form 1099-C (canceled debt)
- Form 1099-A (acquisition or abandonment of secured property)

Use Form W-9 only if you are a U.S. person (including a resident alien), to provide your correct TIN.

If you do not return Form W-9 to the requester with a TIN, you might be subject to backup withholding. See What is backup withholding, *later.*

HALL COUNTY
GEORGIA
*We have it **all** in Hall*

POST OFFICE DRAWER 1435
GAINESVILLE, GA 30503

t: 770.535.8270 | f: 770.531.6711

DIRECTOR
Wesley Geddings

Hall County Government
FINANCIAL SERVICES

EXHIBIT I
MANDATORY E-VERIFY AFFIDAVIT

The undersigned contractor ("Contractor") executes this Affidavit to comply with O.C.G.A § 13-10-91 related to any contract to which Contractor is a party that is subject to O.C.G.A. § 13-10-91 and hereby verifies its compliance with O.C.G.A. § 13-10-91, attesting as follows:

a) The Contractor has registered with, is authorized to use and uses the federal work authorization program commonly known as E-Verify, or any subsequent replacement program;

b) The Contractor will continue to use the federal work authorization program throughout the contract period, including any renewal or extension thereof;

c) The Contractor will notify the public employer in the event the Contractor ceases to utilize the federal work authorization program during the contract period, including renewals or extensions thereof;

d) The Contractor understands that ceasing to utilize the federal work authorization program constitutes a material breach of Contract;

e) The Contractor will contract for the performance of services in satisfaction of such contract only with subcontractors who present an affidavit to the Contractor with the information required by O.C.G.A. § 13-10-91(a), (b), and (c);

f) The Contractor acknowledges and agrees that this Affidavit shall be incorporated into any contract(s) subject to the provisions of O.C.G.A. § 13-10-91 for the project listed below to which Contractor is a party after the date hereof without further action or consent by Contractor; and

g) Contractor acknowledges its responsibility to submit copies of any affidavits, drivers' licenses, and identification cards required pursuant to O.C.G.A. § 13-10-91 to the public employer within five business days of receipt.

1741688 — Federal Work Authorization User Identification Number

Enrolled 9/24/2021 — Date of Authorization

Pencor LLC — Name of Contractor

JFW Boys and Girls club Gym — Name of Project

Hall County, Georgia
Name of Public Employer

I hereby declare under penalty of perjury that the foregoing is true and correct.
Executed on May, 30, 2023 in Alpharetta (city), GA (state).

Signature of Authorized Officer or Agent

Jared C. Penny President
Printed Name and Title of Authorized Officer or Agent

SUBSCRIBED AND SWORN BEFORE ME
ON THIS THE 30th DAY OF May, 2023.

NOTARY PUBLIC John Treadway, Dawson County, GA

JOHN TREADWAY NOTARY PUBLIC DAWSON COUNTY GEORGIA EXPIRES 2/24/2025

My Commission Expires: 2-24-25 [Locus Sigilli]

HALL COUNTY
GEORGIA
We have it all in Hall

POST OFFICE DRAWER 1435
GAINESVILLE, GA 30503

t: 770.535.8270 | f: 770.531.6711

DIRECTOR
Wesley Geddings

Hall County Government
FINANCIAL SERVICES

EXHIBIT J
MANDATORY ETHICS AFFIDAVIT

Contractors, consultants, and vendors of any service or commodity to Hall County, Georgia must read and affirm to adhere to the following ethics requirements for compliance with the Official Code 3.10.070 of Hall County.

3.10.070. - Ethics.

A. It is the policy of Hall County to seek the best overall value when procuring goods and services. Toward this end, the county finds and declares that its objectives will best be achieved through an open, competitive process with a broad range of responsible vendors wishing to furnish products and services to the county. Hall County will establish and conduct a procurement program that maximizes service benefit to the community and awards contracts to vendors who offer the best quality and value.

B. Hall County declares that county employees and officials, along with those wishing to do business with the county, have the shared responsibility for avoiding biased, anticompetitive, or unethical practices.

C. Hall County employees, officials, and their family members are prohibited from seeking, requesting, or receiving any material payment, gift, job offer, security, promise of future benefit, or any other tangible or intangible thing of value when such receipt has the potential to influence a procurement decision or to gain undue advantage in a procurement competition.

D. Prospective vendors must compete for county business within the parameters of the solicitation process and are prohibited from seeking to obtain inside information, attempting to skew the writing of specifications, or influencing a procurement decision through any means outside the process established for the particular solicitation. This principle applies to any contractor, subcontractor, representative, employee, or agent that may be associated with a procurement transaction.

E. Bidders and proposers shall disclose on competitive bid responses any individual(s), firm(s), and/or county official(s) who do business with the county if there is an appearance of a conflict of interest.

F. Ethical business practices are important, both, during a solicitation, and after the decision to grant an award. The county seeks to establish

relationships with business partners whose ongoing ethical standards of business conduct are congruent with those outlined here. The purchasing manager, subject to the approval of the director of financial services, is charged with establishing methods for ongoing monitoring for non-compliance with these principles. The prohibition against the offering of or the acceptance of kickbacks, gratuities, payments or any other instrument of value extends beyond and outside any specific procurement or solicitation.

G. A vendor's contract compliance history with Hall County and other contractual parties is a valid element in the decision to award a solicitation.

H. Hall County stipulates that the furtherance of its strategic goals for job creation, stability and growth in the tax base, business retention, and other fiscal and economic development objectives may be considered during the procurement process. The purchasing manager, subject to the approval of the director of financial services, is authorized to establish procurement initiatives consistent with the county's strategic economic development objectives. These procurement practices shall be applied consistently and equitably and shall have a direct relationship to the county's goals.

I. Hall County employees, officials, and their family members are generally prohibited from participation in any procurement decision or any gain of undue advantage in a procurement competition as a result of contemporaneous employment with a potential or actual business partner.

J. It is unethical for any county employee to purchase commodities or services from a county contract for personal use.

K. With the exception of solicitations for the sale of real property, individuals, firms and businesses seeking an award of a Hall County contract may not initiate or continue any verbal or written communications regarding a solicitation with any county officer, elected official, employee or other county representative other than the purchasing associate named in the solicitation, or the county's financial advisor, between the date of the issuance of the solicitation and the date of the final contract award by the board of commissioners. The purchasing manager will review violations. If determined that such communication has compromised the competitive process, the offer submitted by the individual, firm or business may be disqualified from consideration for award. Solicitations for the sale of real property may allow for verbal or written communications with the appropriate Hall County representative.

L. All county commissioners, officials, and employees shall adhere to the standards outlined in the Hall County Code of Ethics.

M. **(AMENDED)** The purchasing division of the financial services department shall determine and implement methods of educating all prospective contractors, bidders, proposers, and vendors on the requirements and provisions of Code Section 3.10.070, including, but not limited to, requiring each prospective contractor, bidder, proposer, and vendor that expresses an intent to do business with the County to sign an affidavit attesting that they have read this Chapter and have more specifically also read Code Section 3.10.070." (Res. of 11-14-19(1), § 1(Exh. A))

I hereby declare under penalty of perjury that the foregoing is true and correct.

Executed on May, 30, 2023 in Alpharetta (city),

GA (state) 30004 (Zip Code)

Signature of Authorized Officer or Agent

Jared Penny President

Printed Name and Title of Authorized Officer or Agent

SUBSCRIBED AND SWORN BEFORE ME

On This the 30th Day of May, 2023.

NOTARY PUBLIC John Treadway, Dawson County, GA

My Commission Expires: 2-24-25

[Locus Sigilli]

JOHN TREADWAY NOTARY PUBLIC EXPIRES GEORGIA 2/24/2025 DAWSON COUNTY

Copy of Business License

FORSYTH COUNTY BUSINESS LICENSE

Issue Date:
January 1, 2023

Expiration Date:
December 31, 2023

Business Name:
Pencor, LLC

License #: L201700405

Business Location:
625 SIENNA DR
CUMMING, GA 30040

NAICS Code #: 236115, 236220

Business Owner:
Jared Penny

Business Description:
Commercial and Institutional Building Construction , New Single-Family Housing Construction (except For-Sale Builders)

Angela Belt

LICENSE OFFICIAL

General Contractor License

PROFESSIONAL LICENSING

GEORGIA SECRETARY OF STATE BRAD RAFFENSPERGER

CORPORATIONS • ELECTIONS • LICENSING • CHARITIES

Licensee Details

Licensee Information

Name: Jared Clark Penny

Address:

Cumming GA 30040

Primary Source License Information

Lic #:	GCQA005508	**Profession:**	Residential/General Contractor	**Type:**	General Contractor Qualifying Agent
Secondary:		**Method:**	Examination	**Status:**	Active
Issued:	4/19/2017	**Expires:**	6/30/2024	**Last Renewal Date:**	6/8/2022

Associated Licenses

Relationship: Supervisor

Licensee:	Pencor LLC	**License Type:**	General Contractor Company		
License #:	GCCO005510	**License Status:**	Active		
Established:	4/19/2017	**Association Date:**	4/7/2017	**Expiry:**	
Type:	Prerequisite				

Public Board Orders

Please see Documents section below for any Public Board Orders

Other Documents

No Other Documents

Data current as of: June 13, 2022 16:31:46

This website is to be used as a primary source verification for licenses issued by the Professional Licensing Boards. Paper verifications are available for a fee. Please contact the Professional Licensing Boards at 844-753-7825.

PENCOR CONSTRUCTION

Copy of Certificate of Insurance

Client#: 2181348 79PENCOLLC

ACORD™ **CERTIFICATE OF LIABILITY INSURANCE**

DATE (MM/DD/YYYY) 7/05/2022

THIS CERTIFICATE IS ISSUED AS A MATTER OF INFORMATION ONLY AND CONFERS NO RIGHTS UPON THE CERTIFICATE HOLDER. THIS CERTIFICATE DOES NOT AFFIRMATIVELY OR NEGATIVELY AMEND, EXTEND OR ALTER THE COVERAGE AFFORDED BY THE POLICIES BELOW. THIS CERTIFICATE OF INSURANCE DOES NOT CONSTITUTE A CONTRACT BETWEEN THE ISSUING INSURER(S), AUTHORIZED REPRESENTATIVE OR PRODUCER, AND THE CERTIFICATE HOLDER.

IMPORTANT: If the certificate holder is an ADDITIONAL INSURED, the policy(ies) must have ADDITIONAL INSURED provisions or be endorsed. If SUBROGATION IS WAIVED, subject to the terms and conditions of the policy, certain policies may require an endorsement. A statement on this certificate does not confer any rights to the certificate holder in lieu of such endorsement(s).

PRODUCER	CONTACT NAME: GA Certificate Team	
McGriff Insurance Services 741 West Lanier Avenue Suite 100 Fayetteville, GA 30214	PHONE (A/C, No, Ext): 770 471-7100	FAX (A/C, No): 7704776908
	E-MAIL ADDRESS: certificatesga@mcgriff.com	

INSURER(S) AFFORDING COVERAGE	NAIC #
INSURER A : Selective Insurance Co of America	12572
INSURER B : Selective Insurance Company of SC	19259
INSURER C :	
INSURER D :	
INSURER E :	
INSURER F :	

INSURED
Pencor, LLC
625 Sienna Drive
Cumming, GA 30040

COVERAGES **CERTIFICATE NUMBER:** **REVISION NUMBER:**

THIS IS TO CERTIFY THAT THE POLICIES OF INSURANCE LISTED BELOW HAVE BEEN ISSUED TO THE INSURED NAMED ABOVE FOR THE POLICY PERIOD INDICATED. NOTWITHSTANDING ANY REQUIREMENT, TERM OR CONDITION OF ANY CONTRACT OR OTHER DOCUMENT WITH RESPECT TO WHICH THIS CERTIFICATE MAY BE ISSUED OR MAY PERTAIN, THE INSURANCE AFFORDED BY THE POLICIES DESCRIBED HEREIN IS SUBJECT TO ALL THE TERMS, EXCLUSIONS AND CONDITIONS OF SUCH POLICIES. LIMITS SHOWN MAY HAVE BEEN REDUCED BY PAID CLAIMS.

INSR LTR	TYPE OF INSURANCE	ADDL INSR	SUBR WVD	POLICY NUMBER	POLICY EFF (MM/DD/YYYY)	POLICY EXP (MM/DD/YYYY)	LIMITS	
A	X COMMERCIAL GENERAL LIABILITY CLAIMS-MADE X OCCUR X PD Ded: $250 GEN'L AGGREGATE LIMIT APPLIES PER: POLICY PRO-JECT LOC OTHER:			S2448564	07/08/2022	07/08/2023	EACH OCCURRENCE DAMAGE TO RENTED PREMISES (Ea occurrence) MED EXP (Any one person) PERSONAL & ADV INJURY GENERAL AGGREGATE PRODUCTS - COMP/OP AGG $	$1,000,000 $500,000 $15,000 $1,000,000 $3,000,000 $3,000,000 $
A	AUTOMOBILE LIABILITY X ANY AUTO OWNED AUTOS ONLY SCHEDULED AUTOS X HIRED AUTOS ONLY X NON-OWNED AUTOS ONLY			S2448564	07/08/2022	07/08/2023	COMBINED SINGLE LIMIT (Ea accident) BODILY INJURY (Per person) BODILY INJURY (Per accident) PROPERTY DAMAGE (Per accident) $	$1,000,000 $ $ $ $
A	X UMBRELLA LIAB X OCCUR EXCESS LIAB CLAIMS-MADE DED X RETENTION $0			S2448564	07/08/2022	07/08/2023	EACH OCCURRENCE AGGREGATE $	$5,000,000 $5,000,000 $
B	WORKERS COMPENSATION AND EMPLOYERS' LIABILITY ANY PROPRIETOR/PARTNER/EXECUTIVE OFFICER/MEMBER EXCLUDED? Y/N N (Mandatory in NH) If yes, describe under DESCRIPTION OF OPERATIONS below	N / A		WC9071687	07/08/2022	07/08/2023	X PER STATUTE OTH-ER E.L. EACH ACCIDENT E.L. DISEASE - EA EMPLOYEE E.L. DISEASE - POLICY LIMIT	 $1,000,000 $1,000,000 $1,000,000

DESCRIPTION OF OPERATIONS / LOCATIONS / VEHICLES (ACORD 101, Additional Remarks Schedule, may be attached if more space is required)

**** See Attached Form ****

CG7300 01/19 - ElitePac General Liability Extension Endorsement

CG7921 01/19 - Additional Insured - Owners, Lessees Or Contractors - Completed Operations - Automatic Status When Required In Construction Agreement With You

CA7809 11/17 - ElitePac Commercial Automobile Extension

(See Attached Descriptions)

CERTIFICATE HOLDER

CANCELLATION

SHOULD ANY OF THE ABOVE DESCRIBED POLICIES BE CANCELLED BEFORE THE EXPIRATION DATE THEREOF, NOTICE WILL BE DELIVERED IN ACCORDANCE WITH THE POLICY PROVISIONS.

AUTHORIZED REPRESENTATIVE

Michael Anthony Parker Jr.

© 1988-2015 ACORD CORPORATION. All rights reserved.

The ACORD name and logo are registered marks of ACORD

TEC

PENCOR CONSTRUCTION

Letter of Bondability

7220 N 16th Street, Bldg. K Phoenix, Arizona 85020
Telephone: 480.878.4226

March 30, 2023

RE: Letter of Pre-qualification

To Whom It May Concern:

AmTrust Surety Company handles the bonding requirements of Pencor LLC. AmTrust carries an "A-" (Excellent) rating with a Financial Size of "XV" by A.M. Best and is listed in the Federal Register as an acceptable surety.

Please be advised that Pencor, LLC is held in the highest regard by AmTrust Surety and at present provides them with a surety program capable of support on projects as large as $5,000,000 per individual project and $10,000,000 aggregate.

If we are requested by our client to execute a faithful performance and labor and material payment bond as required by the terms of any contract awarded to them for any project, we can foresee no difficulty in fulfilling such a request subject to our normal underwriting conditions. This letter is not an assumption of liability, nor is it a bid bond or performance bond. It is issued only as a prequalification letter and bonding reference as requested by our client.

Please contact us with any concerns or if we can be of further service.

Thank you.

Sincerely,

Chrystal Hedges
Partner

List of Intended Subcontractors

LIST OF INTENDED SUBCONTRACTORS		
TRADE		**COMPANY**
NPDES Monitoring		Roberts Environmental, Inc.
IFC510 Compliance		Mobile Communications America
Underslab Treatment		Bug Busters, Inc.
Paving		Ryals Brothers LLC
Curb & Gutter		Ryals Brothers LLC
Striping		PL Striping Inc.
Fencing		Ballesteros Fence LLC
Landscape & Irrigation		Cumberland Landscape Group
Concrete		Ryals Brothers LLC
Waterproofing & Sealants		Holbrook Waterproofing Co. of GA
Doors, Frames & Hardware - Mat		Classic City Door & Hardware
Doors, Frames & Hardware - Labor		FXA Doors and Hardware
Glass & Glazing		West Metro Glass
Resilient Flooring		Five Star Floor Covering
Sealed Concrete		Polished Concrete & Design
Painting		Southern States Painting
Signage		Multi-Graphics
Misc. Specialties		Restroom Stalls & All
Gym Equipment		H.E. Hodge Company, Inc.
Preengineered Metal Building		Red Dot Building Systems
Fire Protection / Sprinkler / Fire Line		Triton Sprinkler Co. Inc.
Plumbing		Malone Plumbing, Inc.
HVAC		ASL Mechancial
Electrical		Lynn Lighting Electrical
Fire Alarm		Twelve & Associates

Bid Tabulation Summary 6/1/2023

IFB #056-43 General Contractor for Hire for the Construction of a New Gymnasium

BIDDER	BID
Pencor Construction	$ 2,474,740.00
Scroggs & Grizzle	$ 2,502,461.00
Iugis Construction	$ 2,890,000.00
Diversified Construction of GA	$ 4,100,000.00

AGENDA ITEM

Consent Agenda

REPORT TO: **Work Session (07/10/23)**

REPORT TO: **Voting Meeting (07/13/23)**

ITEM NO: 346/2023

SUBJECT: Approve the renewal of the annual contract for RFQ/P #41-002 Demand Services for On-Call Concrete Contractors for various County departments to Chattachoochee Group, Inc. of Clermont, GA, Multiplex, LLC of Duluth GA, and Sol Construction, LLC of Atlanta, GA. The estimated annual cost is $102,410.00.

Meetings:

Work Session Date: 07/10/23 **Voting Meeting Date:** 07/13/23

Executive Summary:

Presenter: WG

Recommendation:
Approve the renewal of the annual contract for RFQ/P #41-002 Demand Services for On-Call Concrete Contractors for various County Departments to Chattachoochee Group, Inc. of Clermont, GA, Multiplex, LLC of Duluth GA, and Sol Construction, LLC of Atlanta, GA. The estimated annual cost is $102,410.00.

Purpose of Request:
Approve the renewal of the annual contract for RFQ/P #41-002 Demand Services for On-Call Concrete Contractors for various County Departments to Chattachoochee Group, Inc. of Clermont, GA, Multiplex, LLC of Duluth GA, and Sol Construction, LLC of Atlanta, GA. The estimated annual cost is $102,410.00.

History:

This bid was originally approved on 09-10-2020 item #16/2020.

Facts and Issues:
This is year four (4) of a five (5) year contract that Road Maintenance, Facilities Management, Parks and Leisure departments utilize. Task orders are requested of each contractor for projects and awarded to the lowest cost bidder.

Options:

Funding Requested $ 102,410.00

Are funds within current budget? Yes

Source of Funds	Various Operating and Capital
Does the action involve a Resolution, Ordinance, Contract, Agreement, etc.?	Yes
Has it been reviewed by the County Attorney?	No
Is there a deadline for this item?	

Approvals:

Buyer	Submit	Purchasing	Budget
JD	JD	AP	TS
Finance	**Attorney**	**Administration**	**Clerk**
WG	VS	CR	JR

Attachments:
Financial Supplement
Sol Construction Renewal
Multiplex LLC Renewal
Chattahoochee Group Renewal

HALL COUNTY BOARD OF COMMISSIONERS
FINANCIAL SUPPLEMENT REPORT

AGENDA ITEM 346/2023

Funds Requested: $ 102,410.00

Request Budgeted: Yes

Proposed Source of Funding:

Various Operating and Capital

Budget Transfer Requested:

No

Funding Source Items:

Fiscal Year	Fund	Division	Account	Amount
2024	TBD	TBD	522200-REPAIRS AND MAINTENANCE	$102,410.00

Budget Transfer Items:

Additional Information/Comments:

Contact for Questions: WG

Phone: 770-535-8270

HALL COUNTY
GEORGIA

POST OFFICE DRAWER 1435
GAINESVILLE, GA 30503

t: 770.535.8270 | f: 770.531.6711

DIRECTOR
Wes Geddings

Hall County Government
FINANCIAL SERVICES

CONTRACT EXECUTION SIGNATURE REQUEST

Date: 06/09/2023

To: Richard Higgins, Chairman, BOC

From: Julie Dorough, Buyer

Your signature is requested to execute the attached bid/contract award documents for:

Bid/Contract No: 41-002-3

Bid/Contract Name: Demand Services for On-Call Concrete Contractors

Department(s) Requesting Contract: Multiple

Award Recipient Name: Sol Construction, LLC

Date of BOC Approval: 09/08/2020

Contract Description:

☒ Annual Contract ☐ New ☒ Renewal

Prior Year's Spend: $102,409.00

☒ Price Increase Requested Increase Percentage: 38.5%

☒ Project/Service Contract Awarded Amount: OPEN

☐ Product Contract Awarded Amount: $0

Comments: Year four (4) of a possible five (5) year contract.

CONTRACT EXECUTION SIGNATURE REQUEST
PRICE INCREASE DETAILS

Bid/Contract No: 41-002

Bid/Contract Name: Demand Services for On-Call Concrete Contractors. Sol Construction, LLC request an average of 38.5% price increase having held pricing year one (1) through three (3).

State of Georgia
County of Hall

Contract #41-002-3

Supplement Agreement #3

Demand Services for On-Call Concrete Contractors

May 26, 2023

Whereas, the County desires to extend the contract period for a one year period through June 30, 2024, in accordance with the terms and conditions of Bid #41-002, Demand Services for On-Call Concrete Contractors, dated September 17, 2020, and

Whereas the Contractor has agreed to this extension and agrees to provide services and/or materials previously supplied in accordance with the original agreement; and

Whereas, with both parties agreeing to the extension as stated and therefore, the above numbered contract is hereby changed as follows:

1. By extending the contract coverage for a one year period through June 30, 2024,

2. Change Orders: Any and all change orders requested by the successful bidder on this project must be approved per the County's Purchasing Policies through the Contract Administrator prior to any work being performed. Any work performed outside the contract agreement for which compensation over and above the contract is requested must have an approved Change Order. If work is done before approval of a Change Order, the subsequent Change Order will be rejected.

With the above change to the original contract set forth herein, the parties hereto agree that all terms and conditions of the original agreement will remain in full force and effect and legally binding on both parties.

In witness whereof, the parties hereto have set their hands and affixed their seals the day and year first above written.

Subscribed and sworn to in our presence this _____ day of _____, 2023

_____
Notary Public
Commission expires: _____

Hall County, Georgia

By: _____
Richard Higgins, Chairman
Board of Commissioners

Subscribed and sworn to in our presence this 5 day of June, 2023

_____
Notary Public
Commission expires: July, 11 2025

GERARDO LAZO
My Commission Expires
NOTARY PUBLIC
July 11, 2025
HENRY COUNTY, GA

Sol Construction, LLC

By: _____
Juliana Gomez
President

IFB #018-43 Demand Services for On-Call Concrete Contractors				SOL Construction		
				FY 2023 Pricing	Requested FY 2024 Price Revisions	
ITEM	ITEM DESCRIPTION	QTY	UOM	PRICE	PRICE	% of Change
1	4'-0" Wide X 4" Thick Sidewalk	0-1,000	LF	$28.00	$42.00	50.0%
2	4'-0" Wide X 4" Thick Sidewalk	1,000-5,000	LF	$25.00	$39.00	56.0%
3	Concrete Form, Placement and Finishing Crew For Slab and Foundation Work	PER	HR	$251.00	$376.50	50.0%
4	Concrete Form, Placement and Finishing Crew For Wall Work	PER	HR	$251.00	$376.50	50.0%
5	Concrete Form, Placement and Finishing Crew For Ditch Work	PER	HR	$251.00	$376.50	50.0%
6	Concrete Pumper Truck	PER	HR	$432.00	$540.00	25.0%
7	9 CY 3,000 PSI Concrete Load	PER	CY	$164.00	$220.00	34.1%
8	Skid Steer Loader w/Operator	PER	HR	$83.00	$110.00	32.5%
9	1 CY Rubber Track Backhoe w/Operator	PER	HR	$69.00	$85.00	23.2%
10	5 CY Dump Truck w/Operator	PER	HR	$88.00	$110.00	25.0%
11	Cones, Barriers, & Signage	PER	DAY	$260.00	$320.00	23.1%
12	Flagman	PER	DAY	$305.00	$350.00	14.8%
13	24" Curb and Gutter, "L" Back	0 – 1,000	LF	$19.50	$29.25	50.0%
14	24" Curb and Gutter, "L" Back	1,000 – 5,000	LF	$16.40	$24.60	50.0%
15	24" Curb and Gutter, Rolled Back	0 – 1,000	LF	$22.60	$33.90	50.0%
16	24" Curb and Gutter, Rolled Back	1,000 – 5,000	LF	$17.60	$26.40	50.0%
17	Catch Basin Top, 1033D, Single Wing	PER	EA	$1,530.00	$2,000.00	30.7%
18	Catch Basin Top, 1034D, Double Wing	PER	EA	$1,720.00	$2,200.00	27.9%
				AVERAGE % of CHANGE		38.5%

June 5th, 2023

Sol Construction
safety service commitment

Julie Dorough
Buyer
Hall County Financial Services
Purchasing Division
770-536-4215 Office
770-535-7112 Fax
jdorough@hallcounty.org

Subject: RFQ\P #41-002-3, Demand Services for On-Call Concrete Contractors

Dear Ms. Dorough,

We appreciate you sending the supplemental agreement for the referenced project. We are returning the signed agreement with a list of updated prices.

In the last three years, we have experienced an unprecedented increase of prices of materials, equipment and labor. For example, concrete prices have gone up by close to 40% to date and we are expecting a $15/cy increase as of July 1st. This is more than a 50% increase for the price of concrete since the date of the original proposal. Furthermore, concrete suppliers have announced another price increase for the first of next year.

We hope that our proposal is acceptable. Please let me know if there are any questions.

Sincerely,

Sol Construction, LLC

Jose Villegas
Vice President

HALL COUNTY
GEORGIA

POST OFFICE DRAWER 1435
GAINESVILLE, GA 30503

t: 770.535.8270 | f: 770.531.6711

DIRECTOR
Wes Geddings

Hall County Government
FINANCIAL SERVICES

CONTRACT EXECUTION SIGNATURE REQUEST

Date: 06/09/2023

To: Richard Higgins, Chairman, BOC

From: Julie Dorough, Buyer

Your signature is requested to execute the attached bid/contract award documents for:

Bid/Contract No: 41-002-3

Bid/Contract Name: Demand Services for On-Call Concrete Contractors

Department(s) Requesting Contract: Multiple

Award Recipient Name: Multiplex, LLC

Date of BOC Approval: 09/08/2020

Contract Description:

☒ Annual Contract ☐ New ☒ Renewal

Prior Year's Spend: $102,409.00

☒ Price Increase Requested Average Increase Percentage: 3.9%

☒ Project/Service Contract Awarded Amount: OPEN

☐ Product Contract Awarded Amount: $0

Comments: Year four (4) of a possible five (5) year contract.

CONTRACT EXECUTION SIGNATURE REQUEST
PRICE INCREASE DETAILS

Bid/Contract No: 41-002

Bid/Contract Name: Demand Services for On-Call Concrete Contractors Multiplex, LLC request an average of 3.9% price increase, having held their pricing fixed and firm for year one (1) through year three (3).

State of Georgia
County of Hall

Contract #41-002-3

Supplement Agreement #3

Demand Services for On-Call Concrete Contractors

May 26, 2023

Whereas, the County desires to extend the contract period for a one year period through June 30, 2024, in accordance with the terms and conditions of Bid #41-002, Demand Services for On-Call Concrete Contractors, dated September 17, 2020, and

Whereas the Contractor has agreed to this extension and agrees to provide services and/or materials previously supplied in accordance with the original agreement; and

Whereas, with both parties agreeing to the extension as stated and therefore, the above numbered contract is hereby changed as follows:

1. By extending the contract coverage for a one year period through June 30, 2024,

2. Change Orders: Any and all change orders requested by the successful bidder on this project must be approved per the County's Purchasing Policies through the Contract Administrator prior to any work being performed. Any work performed outside the contract agreement for which compensation over and above the contract is requested must have an approved Change Order. If work is done before approval of a Change Order, the subsequent Change Order will be rejected.

With the above change to the original contract set forth herein, the parties hereto agree that all terms and conditions of the original agreement will remain in full force and effect and legally binding on both parties.

In witness whereof, the parties hereto have set their hands and affixed their seals the day and year first above written.

Subscribed and sworn to in our presence this _____ day of _____, 2023

_____
Notary Public
Commission expires: _____

Hall County, Georgia

By: _____
Richard Higgins, Chairman
Board of Commissioners

Subscribed and sworn to in our presence this 9th day of June, 2023

DANIEL LUTRELL
NOTARY PUBLIC
Gwinnett County
State of Georgia
My Comm. Expires July 5, 2026

_____
Notary Public
Commission expires: July 5, 2026

Multiplex, LLC

By: _____
Joseph Khalil

IFB #018-43 Demand Services for On-Call Concrete Contractors				Multiplex		
				FY 2023 Pricing	Requested FY 2024 Price Revisions	
ITEM	ITEM DESCRIPTION	QTY	UOM	PRICE	PRICE	% of Change
1	4'-0" Wide X 4" Thick Sidewalk	0-1,000	LF	$28.00	$28.00	0.0%
2	4'-0" Wide X 4" Thick Sidewalk	1,000-5,000	LF	$25.00	$25.00	0.0%
3	Concrete Form, Placement and Finishing Crew For Slab and Foundation Work	PER	HR	$145.00	$145.00	0.0%
4	Concrete Form, Placement and Finishing Crew For Wall Work	PER	HR	$200.00	$200.00	0.0%
5	Concrete Form, Placement and Finishing Crew For Ditch Work	PER	HR	$255.00	$255.00	0.0%
6	Concrete Pumper Truck	PER	HR	$250.00	$250.00	0.0%
7	9 CY 3,000 PSI Concrete Load	PER	CY	$155.00	$200.00	29.0%
8	Skid Steer Loader w/Operator	PER	HR	$125.00	$125.00	0.0%
9	1 CY Rubber Track Backhoe w/Operator	PER	HR	$140.00	$140.00	0.0%
10	5 CY Dump Truck w/Operator	PER	HR	$150.00	$150.00	0.0%
11	Cones, Barriers, & Signage	PER	DAY	$250.00	$250.00	0.0%
12	Flagman	PER	DAY	$240.00	$240.00	0.0%
13	24" Curb and Gutter, "L" Back	0 – 1,000	LF	$15.00	$18.00	20.0%
14	24" Curb and Gutter, "L" Back	1,000 – 5,000	LF	$14.00	$17.00	21.4%
15	24" Curb and Gutter, Rolled Back	0 – 1,000	LF	$20.00	$20.00	0.0%
16	24" Curb and Gutter, Rolled Back	1,000 – 5,000	LF	$18.00	$18.00	0.0%
17	Catch Basin Top, 1033D, Single Wing	PER	EA	$1,800.00	$1,800.00	0.0%
18	Catch Basin Top, 1034D, Double Wing	PER	EA	$1,850.00	$1,850.00	0.0%
				AVERAGE % of CHANGE		3.9%

HALL COUNTY
GEORGIA

POST OFFICE DRAWER 1435
GAINESVILLE, GA 30503

t: 770.535.8270 | f: 770.531.6711

DIRECTOR
Wes Geddings

Hall County Government
FINANCIAL SERVICES

CONTRACT EXECUTION SIGNATURE REQUEST

Date: 06/09/2023

To: Richard Higgins, Chairman, BOC

From: Julie Dorough, Buyer

Your signature is requested to execute the attached bid/contract award documents for:

Bid/Contract No: 41-002-3

Bid/Contract Name: Demand Services for On-Call Concrete Contractors

Department(s) Requesting Contract: Multiple

Award Recipient Name: Chattahoochee Group, Inc.

Date of BOC Approval: 09/08/2020

Contract Description:

☒ Annual Contract ☐ New ☒ Renewal

Prior Year's Spend: $102,409.00

☒ Price Increase Requested Increase Percentage: 32.3%

☒ Project/Service Contract Awarded Amount: OPEN

☐ Product Contract Awarded Amount: $0

Comments: Year four (4) of a possible five (5) year contract.

CONTRACT EXECUTION SIGNATURE REQUEST
PRICE INCREASE DETAILS

Bid/Contract No: 41-002

Bid/Contract Name: Demand Services for On-Call Concrete Contractors. Chattahoochee Group request an average of 32.3% price increase having held prices firm and fixed through year one (1) through year three (3).

State of Georgia
County of Hall

Contract #41-002-3

Supplement Agreement #3

Demand Services for On-Call Concrete Contractors

May 26, 2023

Whereas, the County desires to extend the contract period for a one year period through June 30, 2024, in accordance with the terms and conditions of Bid #41-002, Demand Services for On-Call Concrete Contractors, dated September 17, 2020, and

Whereas the Contractor has agreed to this extension and agrees to provide services and/or materials previously supplied in accordance with the original agreement; and

Whereas, with both parties agreeing to the extension as stated and therefore, the above numbered contract is hereby changed as follows:

1. By extending the contract coverage for a one year period through June 30, 2024,

2. Change Orders: Any and all change orders requested by the successful bidder on this project must be approved per the County's Purchasing Policies through the Contract Administrator prior to any work being performed. Any work performed outside the contract agreement for which compensation over and above the contract is requested must have an approved Change Order. If work is done before approval of a Change Order, the subsequent Change Order will be rejected.

With the above change to the original contract set forth herein, the parties hereto agree that all terms and conditions of the original agreement will remain in full force and effect and legally binding on both parties.

In witness whereof, the parties hereto have set their hands and affixed their seals the day and year first above written.

Subscribed and sworn to in our presence this _____ day of _____, 2023

_____
Notary Public
Commission expires: _____

Hall County, Georgia

By: _____
Richard Higgins, Chairman
Board of Commsissioners

Subscribed and sworn to in our presence this 5th day of June, 2023

Tamara Norsworthy
Notary Public
Commission expires: 6/2/26

TAMARA NORSWORTHY
NOTARY PUBLIC
My Commission Expires
June 2, 2026
HALL COUNTY, GEORGIA

Chattahoochee Group, Inc.

By: Megan Thomas
Megan Thomas
CFO

State of Georgia
County of Hall

Contract #41-002-3

Attachment A

Demand Services for On-Call Concrete Contractors

May 26, 2023

Whereas, the Contractor and the County have agreed to a change in the contract prices and have recorded them below, and have both agreed to their rates, the prices associated with this contract are hereby changed upon approval of the County:

1. 4'-0" Wide x 4" Thick Sidewalk 0-1,000 LF $30.00

2. 4'-0" Wide x 4" Thick Sidewalk 1,000 – 5,000 LF $23.00

3. Concrete Form, Placement & Finishing Crew for Slab & Foundation Work per HR $200.00

4. Concrete Form, Placement & Finishing Crew for Ditch Work per HR $200.00

5. Concrete Form, Placement & Finishing Crew for Ditch Work per HR $200.00

6. Concrete Pumper Trucks per HR $250.00

7. 9 CY 3,000 PSI Concrete Load per CY $200.00

8. Skid Steer Loader w/Operator per HR $100.00

9. 1 CY Rubber Track Backhoe w/Operator per HR $125.00

10. 5 CY Dump Truck w/Operator per HR $120.00

11. Cones, Barriers, & Signage per DAY $850.00

12. Flagman per DAY $400.00

13. 24" Curb and Gutter, "L" Back 0-1,000 LF $25.00

14. 24" Curb and Gutter, "L" Back 1,000-5,000 LF $23.00

15. 24" Curb and Gutter, Rolled Back 0-1,000 LF $25.00

16. 24" Curb and Gutter, Rolled Back 1,000-5,000 LF $23.00

17. Catch Basin Top, 1033D, Single Wing per EACH $2000.00

18. Catch Basin Top, 1034D, Double Wing per EACH $2000.00

IFB #018-43 Demand Services for On-Call Concrete Contractors				Chattohoochee Group		
				FY 2023 Pricing	Requested FY 2024 Price Revisions	
ITEM	ITEM DESCRIPTION	QTY	UOM	PRICE	PRICE	% of Change
1	4'-0" Wide X 4" Thick Sidewalk	0-1,000	LF	$20.00	$30.00	50.0%
2	4'-0" Wide X 4" Thick Sidewalk	1,000-5,000	LF	$16.00	$23.00	43.8%
3	Concrete Form, Placement and Finishing Crew For Slab and Foundation Work	PER	HR	$182.50	$200.00	9.6%
4	Concrete Form, Placement and Finishing Crew For Wall Work	PER	HR	$182.50	$200.00	9.6%
5	Concrete Form, Placement and Finishing Crew For Ditch Work	PER	HR	$182.50	$200.00	9.6%
6	Concrete Pumper Truck	PER	HR	$205.00	$250.00	22.0%
7	9 CY 3,000 PSI Concrete Load	PER	CY	$133.75	$200.00	49.5%
8	Skid Steer Loader w/Operator	PER	HR	$75.00	$100.00	33.3%
9	1 CY Rubber Track Backhoe w/Operator	PER	HR	$95.00	$125.00	31.6%
10	5 CY Dump Truck w/Operator	PER	HR	$85.00	$120.00	41.2%
11	Cones, Barriers, & Signage	PER	DAY	$600.00	$850.00	41.7%
12	Flagman	PER	DAY	$300.00	$400.00	33.3%
13	24" Curb and Gutter, "L" Back	0 – 1,000	LF	$20.00	$25.00	25.0%
14	24" Curb and Gutter, "L" Back	1,000 – 5,000	LF	$18.00	$23.00	27.8%
15	24" Curb and Gutter, Rolled Back	0 – 1,000	LF	$20.00	$25.00	25.0%
16	24" Curb and Gutter, Rolled Back	1,000 – 5,000	LF	$18.00	$23.00	27.8%
17	Catch Basin Top, 1033D, Single Wing	PER	EA	$1,200.00	$2,000.00	66.7%
18	Catch Basin Top, 1034D, Double Wing	PER	EA	$1,500.00	$2,000.00	33.3%
				AVERAGE % of CHANGE		32.3%

HALL COUNTY
GEORGIA We have it all in Hall

AGENDA ITEM

Consent Agenda

REPORT TO: **Work Session (07/10/23)**

REPORT TO: **Voting Meeting (07/13/23)**

ITEM NO: 381/2023

SUBJECT: Approve the renewal of the FY 2024 Memorandum of Understanding with the University of Georgia (UGA) Extension for Cooperative Extension Services and Personnel; authorize the Chairman to execute all related documents, subject to the review and approval by the County Attorney.

Meetings:

Work Session Date: 07/10/23 **Voting Meeting Date:** 07/13/23

Executive Summary:

Presenter: DLJ

Recommendation:
Department recommends approval for the renewal of the FY2024 Memorandum of Understanding with the UGA Extension for cooperative extension services and personnel.

Purpose of Request:
The purpose of this request is to seek approval for the renewal of the FY2024 Memorandum of Understanding with the UGA Extension Office for cooperative exension services and personnel.

History:

Facts and Issues:

The term of this agreement shall be from July 1, 2023 to June 30, 2024.

Options:

Funding Requested	$ 152,007.00
Are funds within current budget?	Yes
Source of Funds	General Fund
Does the action involve a Resolution, Ordinance, Contract, Agreement, etc.?	Yes
Has it been reviewed by the County Attorney?	Yes
Is there a deadline for this item?	

Approvals:

Submit	Approve	Budget	Finance
LJ	LJ	TS	WG

Attorney	Administration	Clerk
VS	CR	JR

Attachments:

Financial Supplement
FY 2024 UGA Extension Contract Renewal

HALL COUNTY BOARD OF COMMISSIONERS
FINANCIAL SUPPLEMENT REPORT

AGENDA ITEM 381/2023

Funds Requested: $ 152,007.00

Request Budgeted: Yes

Proposed Source of Funding:

General Fund

Budget Transfer Requested:

No

Funding Source Items:

Fiscal Year	Fund	Division	Account	Amount
2024	100-GENERAL FUND	7130-EXTENSION OFFICE	521000-PROFESSIONAL SERVICES	$152,007.00

Budget Transfer Items:

Additional Information/Comments:

Contact for Questions:

Phone:

Hall County Board of Commissioners
July 1, 2023 to June 30, 2024

To: Denise Everson, Northeast District Director

From: Hall County Board of Commissioners

Renewal of Contract Hall County BOC

The Hall County BOC wishes to continue the Contract agreement between the Hall County Board of Commissioners and the University of Georgia Board of Regents of The University of Georgia on behalf of The University of Georgia Cooperative Extension. The term of this agreement shall be from July 1, 2023 to June 30, 2024. The Northeast District Extension will be allowed to rebudget funds without prior written approval from Hall County as long as such rebudgeting does not result in a increase in the compensation authorized in this year's budget. Final invoice requested 60 days after the end date of June 30, 2024.

Signature _____ *Print Name* _____ *Date* _____
Hall County BOC, Chairman

Signature GHibbs *Print Name* Garrett Hibbs *Date* 6/12/23
County Extension Coordinator

Employee			**FY2024**
Garrett Hibbs			22,971.00
Jessica Moore			25,200.00
4H Educator			17,959.00
4H Agent			37,500.00
Karen Davis			15,465.00
Total Salaries			119,095.00
Teachers Retirement (19.98%)			
Garrett Hibbs			4,590.00
Jessica Moore			5,035.00
4H Educator			3,588.00
4H Agent			7,493.00
Karen Davis			3,090.00
Total			23,796.00
FICA (SS) 6.2%			
Garrett Hibbs			1,425.00
Jessica Moore			1,563.00
4H Educator			1,114.00
4H Agent			2,325.00
Karen Davis			959.00
FICA HI (Medicare) 1.45%			
Garrett Hibbs			334.00
Jessica Moore			366.00
4H Educator			261.00
4H Agent			544.00
Karen Davis			225.00
Total FICA			9,116.00
Total Salary and Benefits			152,007.00

Please bill the BOC QUARTERLY for the actual expenses of the object codes listed. This contract not to include any benefits other than the ones listed on this budget sheet. All other benefits to be charged to state funds. Request final billing for this contract to be sent within 60 days of the Contract end date.

Bill to the following name and address:
Hall County BOC
PO Drawer 1435 - Finance Department
Payroll Supervisor
Gainesville, GA 30503

AGENDA ITEM

Consent Agenda

REPORT TO: **Work Session (07/10/23)**

REPORT TO: **Voting Meeting (07/13/23)**

ITEM NO: 386/2023

SUBJECT: Approve the Employment Agreement for the Assistant Director of Financial Services.

Meetings:

Work Session Date: 07/10/23 **Voting Meeting Date:** 07/13/23

Executive Summary:

Presenter: DLJ

Recommendation:

Department recommends approval of the Employment Agreement for the Assistant Director of Financial Services.

Purpose of Request:

Purpose of this request is to seek approval for the Employment Agreement for the Assistant Director of Financial Services.

History:

Facts and Issues:

Options:

Funding Requested	$ 180,111.00
Are funds within current budget?	Yes
Source of Funds	GENERAL FUND
Does the action involve a Resolution, Ordinance, Contract, Agreement, etc.?	Yes
Has it been reviewed by the County Attorney?	Yes
Is there a deadline for this item?	

Approvals:

Submit	Approve	Budget	Finance
LJ	LJ	TS	WG

Attorney	Administration	Clerk
VS	CR	JR

Attachments:

Financial Supplement
Employment Agreement - Assistant Director Financial Services
Cost Worksheet

HALL COUNTY BOARD OF COMMISSIONERS
FINANCIAL SUPPLEMENT REPORT

AGENDA ITEM 386/2023

Funds Requested: $ 180,111.00

Request Budgeted: Yes

Proposed Source of Funding:

GENERAL FUND

Budget Transfer Requested:

No

Funding Source Items:

Fiscal Year	Fund	Division	Account	Amount
2024	100-GENERAL FUND	1510-FINANCIAL SERVICES	511100-SALARIES	$120,532.00
2024	100-GENERAL FUND	1510-FINANCIAL SERVICES	512200-FICA	$9,221.00
2024	100-GENERAL FUND	1510-FINANCIAL SERVICES	512400-RETIREMENT	$16,874.00
2024	100-GENERAL FUND	1510-FINANCIAL SERVICES	512100-HEALTH INSURANCE	$30,917.00
2024	100-GENERAL FUND	1510-FINANCIAL SERVICES	512103-CONTRACT EE INSURANCE	$1,567.00
2024	100-GENERAL FUND	1510-FINANCIAL SERVICES	512102-LIFE INSURANCE	$400.00
2024	100-GENERAL FUND	1510-FINANCIAL SERVICES	523201-COMMUNICATIONS	$600.00

Budget Transfer Items:

Additional Information/Comments:

Contact for Questions: DLJ

Phone: 770-531-6712

EMPLOYMENT AGREEMENT

Assistant Director of Finance

THIS AGREEMENT made and entered into this 13th day of July 2023, by and between **HALL COUNTY, STATE OF GEORGIA,** hereinafter called "the County", as party of the first part, and **Taylor Samples**, herein called "Employee", as part of the second part, both of whom agree as follows:

WITNESSETH

WHEREAS, the County desires to employ the services of said **Taylor Samples** as the **Assistant Director of Finance** of Hall County; and

WHEREAS, it is the desire of the governing board, hereafter called "Commission" to provide certain benefits, establish certain conditions of employment and to set working conditions of said Employee; and

WHEREAS, it is the desire of Hall County to secure and retain the services of said Employee and provide inducement for him or her to remain in such employment, and to make possible full work productivity by assuring said Employee's morale and peace of mind with respect to future security, and to provide a just means of terminating the Employee's services at such a time as desired by the County Administrator, or his or her designee; and

WHEREAS, the Employee desires to accept employment as **Assistant Director of Finance** for Hall County**;**

NOW THEREFORE; in consideration of the mutual covenants herein contained, the parties agree as follows:

SECTION 1. Duties

The County hereby agrees to employ **Taylor Samples** as **Assistant Director of Finance**, to perform legally permissible functions and duties specified and assigned by the County Administrator or his or her designee.

_____Initials

SECTION 2. Term

A. Nothing in this agreement shall prevent, limit or otherwise interfere with the right of the County Administrator to terminate the services of this Employee at any time, subject only to the provisions set forth in SECTION 3 of this agreement. The Employee understands that he or she serves at the pleasure of the County Administrator.

B. Nothing in the agreement shall prevent, limit or otherwise interfere with the right of the Employee to resign at any time from his or her position with the County, subject to the provisions set forth in SECTION 3, Paragraphs B and C of this agreement.

SECTION 3. Termination and Severance Pay

A. In the event the Employee is terminated pursuant to Paragraph B hereof and the Employee is willing and able to perform the duties of the position under this agreement, upon execution of a Separation Agreement and General Release, the Employer agrees to pay the Employee a lump sum cash payment equal to three (3) months aggregate annual salary, exclusive of other forms of compensation, less standard withholdings, in addition to the continuation of medical, dental and vision insurance benefits during the three (3) month period immediately following the date of termination. However, in the event the Employee is terminated because the Employee has been convicted of a misdemeanor or a felony, or if the County determines that the Employee has engaged in unprofessional and improper practice, other than negligence, and breach of public trust, including but not limited to illegal acts involving personal gain, or moral turpitude, the County shall be entitled to terminate the Employee immediately without any severance pay, or medical, dental and vision insurance continuation aside from COBRA.

B. In the event the Employer at any point during the term of this agreement reduces the salary or other financial benefits of the Employee in a greater percentage than reductions to all other employees of Employer, or if Employer refuses, following a written request to comply with any provision benefiting Employee herein; or the Employee resigns following a suggestion, whether formal or informal, by the County Administrator that he or she resign, then, in that event, Employee may, at his or her option, be deemed to be terminated at the date of such reduction or refusal to comply within the meaning and context of the herein severance pay provision.

C. In the event the Employee voluntarily resigns his or her position with the County as **Assistant Director of Finance** then the Employee shall give the County **thirty (30)** days written

notice in advance, unless the parties otherwise agree. The provision for severance pay and continuation of employment benefits detailed in SECTION 3, Paragraph A shall not apply to a voluntary resignation.

SECTION 4. Termination Due to Disability

If the Employee is unable to perform his or her duties because of sickness, accident, injury, or mental incapacity, and no reasonable accommodations are available, the County shall have the option to terminate employment, subject to the severance pay requirements of SECTION 3, Paragraph A. However, the Employee shall be compensated for any accrued benefits, in accordance with current policies.

SECTION 5. Salary

The County agrees to pay the Employee for his or her services rendered, pursuant hereto, an annual base salary of **$120,531.64** payable in installments at the same time as other employees of the County are paid, except that the county may put in place cost reduction measures at any time and for any duration as required by a lack of financial resources. The base annual salary and benefits may be reviewed annually by the County Administrator and consideration for increases may be determined based upon the performance of the employee or consideration of providing a Cost of Living Adjustment (COLA).

SECTION 6. Performance Evaluation

The County Administrator, or his or her designee, shall review and evaluate the performance of Employee at least annually on the anniversary day of this agreement. Said review and evaluation shall be in accordance with criteria developed by the County Administrator, or his or her designee, and Employee. Performance criteria may be added to or deleted from, as the County Administrator, or his or her designee may from time to time determine. Further, the County Administrator, or his or her designee, shall provide the Employee with a written summary statement of the findings of the evaluation.

SECTION 7. Hours of Work

It is generally recognized that the position of **Assistant Director of Finance** involves the devotion of a great deal of time beyond typically recognized business hours.

SECTION 8. Outside Activities

The Employee shall devote his or her full time to the position described in this agreement. With the approval of the County Administrator, or his or her designee, the Employee may engage in teaching, consulting or other non-employer related activities as long as he or she does not interfere with the execution of the duties of this position, or present a conflict of interest. Such consent must be obtained by advance approval, in writing, detailing the specifics of such activity.

SECTION 9. Political Activity

If the Employee announces as a candidate for any elective office during the duration of this contract, he or she will resign from Hall County employment immediately upon declaring candidacy as defined by state law. During the term of this contract, the Employee may not:

A. Be involved in any political activity that would constitute a conflict of interest; including participation in any aspect of any local political campaign on behalf of one's self if intending to seek elected office, or other individual or in opposition to any candidate for office within Hall County; including municipal and/or county government office. This restriction includes but is not limited to displaying or distributing information, materials, or paraphernalia in support of any political candidate, party or organization.

B. Knowingly solicit, accept, or receive political contributions from any person, to be used in support of or in opposition to any political candidate for election within Hall County, including municipal and/or county government office.

C. Use, or promise to use, directly or indirectly, any official authority or influence, whether possessed or anticipated, to secure or attempt to secure for any person a job or other advantage for the purpose of influencing the vote or political action of any person.

_____Initials

SECTION 10. Vehicle and Phone

A cellular phone dedicated solely for business usage may be provided by the Employer. In such case, the Employer shall be responsible for paying for and maintaining regular monthly service. Should the Employee desire to use their personal cellular phone for business purposes, Employer shall reimburse the Employee the amount of $50 per month.

SECTION 11. Insurance Benefits

The County agrees to put in force and make premium payments for Medical, Dental, Vision, Short-Term Disability and Life Insurance policies on behalf of the Employee and if so elected, eligible dependents, at a level of coverage available to other County employees. The Employee may choose not to cover his/her dependents.

SECTION 12. Retirement Benefits

Provided that contributions are being made by the County, if the Employee elects, Hall County agrees to contribute 8% of annual compensation as defined by the retirement plan in addition to Employer matching contributions made on contributions by the Employee as received by other County employees, into a defined contribution plan, except that the County may reduce or suspend this contribution at any time and for any duration as required due to a lack of financial resources. Retirement contributions shall not be made on any severance pay provided by the Employer, paid in accordance with Section 3.

SECTION 13. Paid Time Off (PTO) or Vacation and Sick Leave

As applicable, the County will provide for Paid Time Off (PTO) or vacation and sick leave in the same manner as the accruals currently received by other County Employees. In the event that the County changes or adopts a new program for all employees, such changes shall also apply to the **Assistant Director of Finance**. Accrued PTO or vacation leave, whichever is applicable, shall be paid to Employee upon termination of employment.

_____Initials

SECTION 14. Dues, Subscriptions and Professional Development

A. The County agrees to pay the Employee's annual membership dues, subscriptions and conference expenses incurred by the Employee in conjunction with the Employee's duties, not to exceed the budget and subject to prior approval by the County Administrator or his or her designee.

B. The County agrees to pay the travel and subsistence expenses of the Employee for expenses related to maintenance of professional certifications, professional and official travel, meetings and occasions adequate to continue the professional development of the Employee and to adequately pursue necessary official and other functions for the department, not to exceed the budget and subject to prior approval by the County Administrator or his or her designee.

SECTION 15. Indemnification

The County shall defend, save harmless and indemnify the Employee against any claim or demand or legal action, whether groundless or otherwise, arising out of an alleged act or omission occurring in the performance of the Employee's duties as **Assistant Director of Finance**. The County or its insurance carrier will pay the amount of any settlement or judgment agreed to or rendered against the Employee and the County may agree to such settlement or the payment of a judgment with or without the express consent of the Employee. Any defense and/or indemnification of the Employee by the County shall be subject to all of the terms and conditions found in the County's Defense and Indemnification ordinance/policy.

SECTION 16. General Provisions

A. The text herein shall constitute the entire agreement between the parties. Any amendment hereto shall be in writing and be executed by both parties.

B. This agreement shall be binding upon and inure to the benefit of the heirs at law and executors of the Employee.

C. If any provision, or any portion thereof, contained in this agreement is held unconstitutional, invalid or unenforceable, the remainder of this agreement, or portion thereof, shall be deemed severable, shall not be affected and shall remain in full force and effect.

D. This agreement will become effective on the 13th day of July 2023, and shall continue thereafter

_____Initials

unless or until the agreement is terminated by either party as set forth herein.

E. This agreement shall be executed in duplicate, each of which shall be deemed to be complete of itself and may be introduced into evidence or used for any purpose without the production of the other copy.

IN WITNESS WHEREOF, THE PARTIES HERETO HAVE SET THEIR HANDS AND SEALS THIS ____ DAY OF _____, 2023.

HALL COUNTY, GEORGIA

_____
County Administrator

ATTEST:

_____
County Commission Clerk
(Seal)

_____
Employee

APPROVAL AS TO FORM

_____
County Attorney

_____Initials

HALL COUNTY
GEORGIA *We have it **all** in Hall*

REQUEST TYPE: FULL-TIME POSITION

1510	Financial Services
Department #	**Department Name**
Assistant Director of Finance	
Position Title	**Priority #**

ADDITIONAL PERSONNEL COST CALCULATION

New Position		Account
$120,531.64	Salary	511100
9,221.00	Taxes	512200
16,874.43	Retirement	512400
30,451.00	Health	512100
1,567.00	Dental & Vision	512103
313.00	Life	512102
87.00	AD&D	512102
466.00	Short Term Disability	512100
$179,511.07	**Total Additional Personnel Costs**	

JUSTIFICATION (please provide a short explanation of your request on the lines below):

Please note taxes, retirement, and benefits are all estimates based on the maximum potential cost.

PERSONNEL EQUIPMENT REQUEST (list all equipment required and estimated cost)

**Do not add these estimated costs to your department's operating budget. It is calculated separately by OMB.

EQUIPMENT DESCRIPTION (uniform, gun, fire safety suit, vehicle, computer, cell phone etc.)	ESTIMATED COST
Cell phone allowance - 523201	$ 600.00
	$ -
	$ -

AGENDA ITEM

Consent Agenda

REPORT TO: **Work Session (07/10/23)**

REPORT TO: **Voting Meeting (07/13/23)**

ITEM NO: 371/2023

SUBJECT: Approve the agreement renewal for On-Call Planning Services for Planning & Development to CPL Architects, Engineers, Landscape Architect & Surveyor, D.P.C., P.C. The estimated cost is $707,595.00.

Meetings:

Work Session Date: 07/10/23 **Voting Meeting Date:** 07/13/23

Executive Summary:

Presenter: RD

Recommendation:

Approve the agreement renewal for On-Call Planning Services for Planning & Development to CPL Architects, Engineers, Landscape Architect & Surveyor, D.P.C., P.C. The estimated cost is $707,595.00

Purpose of Request:

Approve the agreement renewal for On-Call Planning Services for Planning & Development to CPL Architects, Engineers, Landscape Architect & Surveyor, D.P.C., P.C. The estimated cost is $707,595.00

History:

The original agreement was approved and ratified for Professional Planning Services for the Planning & Development Department to CPL of Suwanee, GA. CPL is in good standing within the County.

Facts and Issues: **Options:**

Funding Requested	$ 707,595.00
Are funds within current budget?	Yes
Source of Funds	General / Development Services
Does the action involve a Resolution, Ordinance, Contract, Agreement, etc.?	Yes
Has it been reviewed by the County Attorney?	Yes
Is there a deadline for this item?	2023-06-30

Approvals:

Buyer	Submit	Approve	Purchasing
EW	AD	RD	AP

Budget	Finance	Attorney	Administration
EW	WG	WLI	CR
Clerk			
JR			

Attachments:
Financial Supplement
PROPOSED Renewal # 2
Original Agreement (Signed 1/11/2022)
Renewal #1 (Signed 9/8/2022)

HALL COUNTY BOARD OF COMMISSIONERS
FINANCIAL SUPPLEMENT REPORT

AGENDA ITEM 371/2023

Funds Requested: $ 707,595.00

Request Budgeted: Yes

Proposed Source of Funding:

General / Development Services

Budget Transfer Requested:

No

Funding Source Items:

Fiscal Year	Fund	Division	Account	Amount
2024	272-DEVELOPMENT SERVICES FUND	7410-PLANNING	521000-PROFESSIONAL SERVICES	$503,595.00
2024	100-GENERAL FUND	7220-BUILDING INSPECTION	521000-PROFESSIONAL SERVICES	$204,000.00

Budget Transfer Items:

Additional Information/Comments:

Contact for Questions: RD

Phone: (770) 297-5544

Hall County Government
FINANCIAL SERVICES

CONTRACT EXECUTION SIGNATURE REQUEST

HALL COUNTY
GEORGIA

POST OFFICE DRAWER 1435
GAINESVILLE, GA 30503

t: 770.535.8270 | f: 770.531.6711

DIRECTOR
Wes Geddings

Date:

To:

From:

Your signature is requested to execute the attached bid/contract award documents for:

Bid/Contract No:

Bid/Contract Name:

Department(s) Requesting Contract:

Award Recipient Name:

Contract Description:

☐ Annual Contract ☐ New ☐ Renewal

Estimated Year-to-Date Spend:

☐ Price Increase Requested Increase Percentage:

☐ Project/Service Contract Awarded Amount:

☐ Product Contract Awarded Amount:

Comments:

CONTRACT EXECUTION SIGNATURE REQUEST
PRICE INCREASE DETAILS

Bid/Contract No:

Bid/Contract Name:

HALL COUNTY
GEORGIA
We have it all in Hall

POST OFFICE DRAWER 1435
GAINESVILLE, GA 30503

t: 770.535.8270 | f: 770.531.6711

DIRECTOR
Wesley Geddings

Hall County Government
FINANCIAL SERVICES

State of Georgia
County of Hall

Contract #41-001

RENEWAL No. 002

Demand Services for Civil Engineering Services For On-Call Professional Planning Services

This Amendment Extension No. 002 by and between CPL Team of Suwanee, Georgia, and Hall County, Georgia of Gainesville, Georgia (together 'Parties'), to the original AGREEMENT executed 01/11/2022, and Amendment Extension No. 002, shall be effective as of _____. The County will issue a new Purchase Order to CPL Team for FY 2024 work, and all invoices for services rendered July 1, 2023 to June 30, 2024 must reference the new PO number.

WHEREAS, the Parties hereby mutually agree to renew the AGREEMENT for the period of one (1) calendar year after execution, and have the option, upon mutual agreement between the parties, of three (3) additional Extension options. Any new solicitations for services and subsequent contracts will supersede any Amendments thereto. The County may terminate this Amendment Extension No. 002 with sixty (60) days written notice. All payments will be made in arrears of services provided.

NOW THEREFORE, for good and valuable consideration, the receipt and sufficiency of which are hereby acknowledge, the parties do hereby agree as follows:

SUCCESSORS AND ASSIGNS: This Amendment Extension No. 002 shall be binding upon and inure to the benefit of the successors and permitted assigns of the parties hereto.

ENTIRE AGREEMENT: Except as expressly modified by this Amendment Extension No. 002, the AGREEMENT shall be and remain in full force and effect in accordance with its terms and shall constitute the legal, valid, binding and enforceable obligations to the parties. This Amendment Extension No. 002 and the AGREEMENT and any subsequent amendments thereto, collectively, are the complete agreement of the parties and supersede any prior agreements or representations, whether oral or written, with respect hereto.

APPENDIX "A" Terms and Conditions of the original contract remains unchanged.
APPENDIX "B" CPL Hourly Rates updated for FY 2024

IN WITNESS WHEREOF, said Parties have hereunto affixed their signature and seal on the day, month, and year first above written:

CPL Architects, Engineers, Landscape Architect & Surveyor; D.P.C, P.C.

By: Richard J Edinger

Title: VICE PRESIDENT

Print Name: RICHARD J. EDINGER

Sworn to and subscribed before me this

22 Day of June, 2023

Notary Public: Brenda C. Farmer

Notary commission expires: 5/25/27

[Locus Sigilli]

HALL COUNTY, GEORGIA

By: _____
Richard Higgins, Chairman
Hall County Board of Commissioners

Attestation: _____
County Clerk

APPROVED AS TO FORM:

William J. Linkous III, County Attorney

APPENDIX "B"

CPL HOURLY RATES
Revised Q12023

BILLING ROLE	BILLING RATE
Principal	
Kevin McOmber	$240.00
Rich Edinger	$210.00
Project Manager	
Rebecca Keefer	$195.00
Beth Garmon	$150.00
Assistant Project Manager	
Mark Baumgart	$185.00
Planner	
Richard Hathcock	$160.00
Tania Celis Leyva	$155.00
Planning Coordinator/Permit Technician	
Morgan Matovina	$110.00
Monica Garcia	$110.00
Clerical | Administrative	
Lori Brothers	$80.00
Beth Farmer	$80.00
Building Plans Examiner	
Kevin O'Brien	$165.00
Jeff Hutchings	$155.00
Building Inspector	
Solomon Teklu	$135.00
Jonathan Tsaku	$135.00
Building Official	
Kenny Barber	$150.00
Soil and Erosion Control Supervisor	
Amanda Russell	$150.00
Soil and Erosion Control Inspector	
Walter Osorio	$125.00

CPL
ARCHITECTURE
ENGINEERING
PLANNING
CPLteam.com

January 10, 2022

Mr. Srikanth Yamala, Public Works Director
Hall County Government
2875 Browns Bridge Road
Gainesville, GA 30504-5635

VIA EMAIL

RE: Hall County
On-Call Planning Services Proposal

Dear Mr. Yamala:

CPL Architects, Engineers, Landscape Architect and Surveyor, D.P.C. (P.C.) is pleased to provide this letter proposal for professional planning services. We understand that Hall County is interested in having CPL provide planning staff to assist the Planning Department. We will provide professional, timely and respectful planning services and embrace this attitude with you, the staff, the elected officials, and the entire development community. Our approach is to provide efficient operations using highly experienced CPL staff. The proposed Scope of Work and corresponding Fee Proposal are as follows:

Scope of Work:

We propose to provide the services of Kevin McOmber, Rich Edinger, Rebecca Keefer, and Richard Hathcock to meet the needs that have been identified to date. Here is a summary of their experience and their proposed role:

Mr. McOmber, PE, is a 32-year veteran with CPL and is the firm's National Director for Community services. He has provided consulting services to many municipalities in the Atlanta region. He will be the project Principal-in-Charge, providing project leadership and will be a resource to the department, as needed. We propose having Mr. McOmber involved with Hall County approximately 16-hours per week. During the month of January, Mr. McOmber will be available on site 2 days per week. He will conduct a conference call with county and CPL staff the other 3-days per week to review assignments and make decisions.

Ms. Keefer, AICP, Is the firm's Senior Planner in Georgia and has been the project manager for numerous planning projects, including planning department leadership for several municipalities in the Atlanta region. She is an 11-year veteran of CPL. She will be the Project Manager for this assignment, and we propose having her on-site with Hall County 2-days per week beginning February 1. She will attend the conference calls and work on planning matters remotely on the other three days of the week.

Mr. Hathcock has great experience as a Zoning Administrator, which is his proposed role for this assignment. He is experienced with development reviews, zoning cases that go before county boards, and comprehensive plan updates. He enjoys managing long range, municipal planning projects, as they can have positive, lasting impacts on the community. We propose having him involved remotely 16-hours per week.

Mr. Edinger, PE, is a 16-year veteran of CPL and is the firms Southeast Region Community Practice Leader. He has consulted with over a dozen Atlanta area municipalities on development matters

3011 Sutton Gate Dr.
Suite 130
Suwanee, GA 30024
770.831.9000 TEL
CPLTeam.com

in his 30-year career and for the past 5-years has been a district 2 appointee to the Municipal-Gwinnett County Planning Commission. He will serve as a resource Principal.

Fee Proposal

CPL will perform the above referenced scope of work hourly as indicated in the hourly rates listed in Appendix 'B'. We estimate this effort will cost $50,000 monthly.

We will not exceed the estimated budget without authorization from the County. Direct expenses will be billed at cost plus 15%. Direct expenses include, but are not limited to, reproduction cost, courier service, mileage, telephone/fax cost, etc.

TERMS AND CONDITIONS:

This agreement shall be administered in accordance with the Terms and Conditions listed in Appendix "A" and the hourly rates listed in Appendix "B" attached hereto.

This document together with the exhibits and/or appendices identified herein constitutes the entire understanding between Hall County and CPL with respect to the work to be performed by CPL for the benefit of Hall County and may only be modified in writing signed by both parties. Please sign and return the enclosed copy of this letter if this document satisfactorily sets forth the understanding of the arrangement between Hall County and CPL. Receipt of the signed agreement will serve as our notice to proceed. This Contract will be open for acceptance for sixty days from the date of this letter.

We look forward to working with you on this project.

Sincerely,

CPL ARCHITECTS, ENGINEERS, LANDSCAPE ARCHITECT and SURVEYOR, D.P.C. (P.C.)

Kevin J. McOmber, PE
Executive Vice President

Tim Knapp, AIA
Executive Vice President
Corporate Secretary

cc: file

Approved By: Jack A. Connell Date: 1-11-2022

APPENDIX "A"
TERMS AND CONDITIONS

1. CPL Architects, Engineers, Landscape Architect and Surveyor, D.P.C. (P.C.) shall perform the services defined in this Letter Agreement and Client agrees to pay CPL for said services as set forth in the agreement. In providing services under this Agreement, CPL shall perform in a manner consistent with and limited to that degree of care and skill ordinarily exercised by members of the same profession currently practicing under similar circumstances at the same time and in the same or similar locality. CPL makes no warranty, express or implied, as to its professional services rendered under this Agreement.

2. Construction cost estimates prepared by CPL represents CPL's best judgment as professionals familiar with the construction industry. It is recognized, however, that CPL has no control over cost of labor, materials, or equipment, over contractors' methods of determining bid prices, or over competitive bidding or market conditions. CPL cannot and does not guarantee that proposals, bids, or actual construction costs will not vary from cost estimates prepared by CPL.

3. If requested by Client or if required by the scope of services of the Agreement, CPL shall visit the site at intervals appropriate to the stage of construction to become generally familiar with the progress and quality of the work and to determine in general if the work is proceeding in accordance with the Contract Documents. However, CPL shall not be required to make exhaustive or continuous on-site inspections to check the quality or quantity of the work. CPL shall not have control or charge of and shall not be responsible for construction means, methods, techniques, sequences, or procedures, or for safety precautions and programs in connection with the Work, for the acts or omissions of the contractor, subcontractors, or any other persons performing any of the work, or for the failure of any of them to carry out the work in accordance with the Contract Documents.

4. The cost of permits, fees, toll telephone calls, courier service, reproduction of reports, Drawings, and Specifications, transportation in connection with the Project, and other out of pocket expenses will be reimbursed to CPL by Client at cost plus 15%.

5. CPL shall submit monthly statements for services rendered and for reimbursable expenses incurred. Statements will be based upon CPL's time of billing. Payment is due upon receipt of CPL's Statement. If Client fails to make any payment due CPL for services and expenses within 30 days after the date of CPL's statement therefore, the amounts due CPL shall include a charge at the rate of 1.5% per month (18% per annum), or portion thereof, from said 30th day, and, in addition, CPL may, after giving 30 days' written notice to Client, suspend services under this Agreement until CPL has been paid in full all amounts due.

6. This Agreement may be terminated by either party upon 30 days' written notice should the other party fail substantially to perform in accordance with its terms through no fault to the party initiating termination, or in the event Project is cancelled. In the event of termination, CPL shall be paid the compensation plus Reimbursable Expenses due for services performed to termination date.

7. This Agreement shall be governed by the laws of the State Georgia.

8. The services to be performed by CPL under this Agreement are intended solely for the benefit of the Client. Nothing contained herein shall confer any rights upon or create any duties on the part of CPL toward any persons not a party to this Agreement including, but not limited to, any contractor, subcontractor, supplier, or the agents, officers, employees, insurers, or sureties of any of them.

9. Client and CPL each binds himself and his partners, successors, executors, administrators, and assigns to the other party to this Agreement and to the partners, successors, executors, administrators, and assigns of such other party, in respect to all covenants of this Agreement. Neither Client nor CPL shall assign, sublet, or transfer his interest in this Agreement without the written consent of the other; however, CPL may employ others to assist in the carrying out of duties under this Agreement.

CPL
ARCHITECTURE
ENGINEERING
PLANNING
CPLteam.com

APPENDIX "B"
CPL HOURLY RATES

PRINCIPALS	
Kevin McOmber	$240/HR
Rich Edinger	$210/HR
PROJECT MANAGER	
Rebecca Keefer	$195/HR
ASSISTANT PROJECT MANAGER	
Mark Baumgart	$180/HR
PLANNERS	
Richard Hathcock	$160/HR
Tania Celis Leyva	$150/HR
PLANNING COORDINATOR	
Cyndee Bonacci	$110/HR
ADMINISTRATIVE SUPPORT	
Lori Brothers	$ 75/HR
Beth Farmer	$ 60/HR
AUTO MILEAGE	IRS RATE + 15%
MISCELLANEOUS	COST PLUS 15%

3011 Sutton Gate Dr.
Suite 130
Suwanee, GA 30024
770.831.9000 TEL
CPLTeam.com

CPLAR-1 OP ID: SM

CERTIFICATE OF LIABILITY INSURANCE

DATE (MM/DD/YYYY) 01/10/2022

THIS CERTIFICATE IS ISSUED AS A MATTER OF INFORMATION ONLY AND CONFERS NO RIGHTS UPON THE CERTIFICATE HOLDER. THIS CERTIFICATE DOES NOT AFFIRMATIVELY OR NEGATIVELY AMEND, EXTEND OR ALTER THE COVERAGE AFFORDED BY THE POLICIES BELOW. THIS CERTIFICATE OF INSURANCE DOES NOT CONSTITUTE A CONTRACT BETWEEN THE ISSUING INSURER(S), AUTHORIZED REPRESENTATIVE OR PRODUCER, AND THE CERTIFICATE HOLDER.

IMPORTANT: If the certificate holder is an ADDITIONAL INSURED, the policy(ies) must have ADDITIONAL INSURED provisions or be endorsed. If SUBROGATION IS WAIVED, subject to the terms and conditions of the policy, certain policies may require an endorsement. A statement on this certificate does not confer rights to the certificate holder in lieu of such endorsement(s).

PRODUCER 585-385-0428 Poole Professional B&B of MA 107 Audubon Rd, #2, Ste 305 Wakefield, MA 01880 Mary-Beth Rumble	CONTACT NAME: PHONE (A/C, No, Ext): 585-385-0428 FAX (A/C, No): 585-662-5755 E-MAIL ADDRESS: smiller@poole-ny.com
	INSURER(S) AFFORDING COVERAGE — NAIC #
	INSURER A : Valley Forge Insurance Company — 20508
INSURED CPL Architects, Engineers, Landscape Architect and Surveyor, D.P.C. d/b/a CPL 205 St Paul Street Rochester, NY 14604	INSURER B : Continental Insurance Company — 35289
	INSURER C : XL Specialty Insurance Company — 37885
	INSURER D :
	INSURER E :
	INSURER F :

COVERAGES CERTIFICATE NUMBER: REVISION NUMBER:

THIS IS TO CERTIFY THAT THE POLICIES OF INSURANCE LISTED BELOW HAVE BEEN ISSUED TO THE INSURED NAMED ABOVE FOR THE POLICY PERIOD INDICATED. NOTWITHSTANDING ANY REQUIREMENT, TERM OR CONDITION OF ANY CONTRACT OR OTHER DOCUMENT WITH RESPECT TO WHICH THIS CERTIFICATE MAY BE ISSUED OR MAY PERTAIN, THE INSURANCE AFFORDED BY THE POLICIES DESCRIBED HEREIN IS SUBJECT TO ALL THE TERMS, EXCLUSIONS AND CONDITIONS OF SUCH POLICIES. LIMITS SHOWN MAY HAVE BEEN REDUCED BY PAID CLAIMS.

INSR LTR	TYPE OF INSURANCE	ADDL INSD	SUBR WVD	POLICY NUMBER	POLICY EFF (MM/DD/YYYY)	POLICY EXP (MM/DD/YYYY)	LIMITS	
A	X COMMERCIAL GENERAL LIABILITY						EACH OCCURRENCE	$ 1,000,000
	CLAIMS-MADE X OCCUR			7014752105	04/22/2021	04/22/2022	DAMAGE TO RENTED PREMISES (Ea occurrence)	$ 1,000,000
							MED EXP (Any one person)	$ 15,000
							PERSONAL & ADV INJURY	$ 1,000,000
	GEN'L AGGREGATE LIMIT APPLIES PER:						GENERAL AGGREGATE	$ 2,000,000
	POLICY X PRO-JECT LOC						PRODUCTS - COMP/OP AGG	$ 2,000,000
	OTHER:							$
A	AUTOMOBILE LIABILITY						COMBINED SINGLE LIMIT (Ea accident)	$ 1,000,000
	X ANY AUTO			7014752122	04/22/2021	04/22/2022	BODILY INJURY (Per person)	$
	X OWNED AUTOS ONLY X SCHEDULED AUTOS						BODILY INJURY (Per accident)	$
	X HIRED AUTOS ONLY X NON-OWNED AUTOS ONLY						PROPERTY DAMAGE (Per accident)	$
								$
B	X UMBRELLA LIAB X OCCUR						EACH OCCURRENCE	$ 10,000,000
	X EXCESS LIAB CLAIMS-MADE			7014752136	04/22/2021	04/22/2022	AGGREGATE	$ 10,000,000
	DED X RETENTION $ 10000							$
B	WORKERS COMPENSATION AND EMPLOYERS' LIABILITY Y/N						X PER STATUTE OTH-ER	
	ANY PROPRIETOR/PARTNER/EXECUTIVE OFFICER/MEMBER EXCLUDED? (Mandatory in NH) N / A			7014752119	04/22/2021	04/22/2022	E.L. EACH ACCIDENT	$ 1,000,000
	If yes, describe under DESCRIPTION OF OPERATIONS below						E.L. DISEASE - EA EMPLOYEE	$ 1,000,000
							E.L. DISEASE - POLICY LIMIT	$ 1,000,000
C	Prof. Liability			DPR9975936	04/22/2021	04/22/2022	PER CLAIM	5,000,000
	PollutionLiability			DEDUCTIBLE $200,000			AGGREGATE	5,000,000

DESCRIPTION OF OPERATIONS / LOCATIONS / VEHICLES (ACORD 101, Additional Remarks Schedule, may be attached if more space is required)

On-Call Planning Services

CERTIFICATE HOLDER

HALLCO1

Board of Commissioners of
Hall County
2875 Browns Bridge Road
Gainesville, GA 30504

CANCELLATION

SHOULD ANY OF THE ABOVE DESCRIBED POLICIES BE CANCELLED BEFORE THE EXPIRATION DATE THEREOF, NOTICE WILL BE DELIVERED IN ACCORDANCE WITH THE POLICY PROVISIONS.

AUTHORIZED REPRESENTATIVE

Mary Beth Rumble

© 1988-2015 ACORD CORPORATION. All rights reserved.

The ACORD name and logo are registered marks of ACORD

HALL COUNTY
GEORGIA
We have it all in Hall

POST OFFICE DRAWER 1435
GAINESVILLE, GA 30503

t: 770.535.8270 | f: 770.531.6711

DIRECTOR
Wesley Geddings

Hall County Government
FINANCIAL SERVICES

AMENDMENT RENEWAL No. 001

On-Call Professional Planning Services

This Amendment Renewal No. 001 by and between CPL Team of Suwanee, Georgia, and Hall County, Georgia of Gainesville, Georgia (together 'Parties'), to the original AGREEMENT executed 01/11/2022, shall be effective as of the date this Amendment Renewal No.001 is fully executed by both parties. After Board approval, the County will issue a Purchase Order to CPL Team which will be the written Notice-To-Proceed. All invoices must reference the new PO number for each renewal period.

WHEREAS, the Parties hereby mutually agree to renew the AGREEMENT for the period of one (1) calendar year after execution, and have the option, upon mutual agreement between the parties, of four (4) additional renewal options. Any new solicitations for services and subsequent contracts will supersede any Amendments thereto. The County may terminate this Amendment Renewal No.001 with sixty (60) days written notice. All payments will be made in arrears of services provided.

NOW THEREFORE, for good and valuable consideration, the receipt and sufficiency of which are hereby acknowledge, the parties do hereby agree as follows:

SUCCESSORS AND ASSIGNS: This Amendment Renewal No. 001 shall be binding upon and inure to the benefit of the successors and permitted assigns of the parties hereto.

ENTIRE AGREEMENT: Except as expressly modified by this Amendment Renewal No.001, the AGREEMENT shall be and remain in full force and effect in accordance with its terms and shall constitute the legal, valid, binding and enforceable obligations to the parties. This Amendment Renewal No. 001 and the AGREEMENT and any subsequent amendments thereto, collectively, are the complete agreement of the parties and supersede any prior agreements or representations, whether oral or written, with respect hereto. Consultant must sign this Amendment Renewal No. 001 first, then the County will execute said document.

APPENDIX "A" Terms and Conditions of the original contract remains unchanged.

APPENDIX "B" CPL Hourly Rates of the original contract remains unchanged for the life of this renewal No.001.

APPENDIX "B.1" Additional hourly rates

IN WITNESS WHEREOF, said Parties have hereunto affixed their signature and seal on the day, month, and year first above written:

CPL TEAM'S SIGNATURE SECTION

CPL Architects, Engineers, Landscape Architect & Surveyor, D.P.C., P.C
(Contractor's company's full legal name)

Sworn to and subscribed before me this
17th Day of August, 2022

by: _____

Brenda C. Farmer
Notary Public

Print Name: Richard J. Edinger

Title: Vice President

Brenda C. Farmer

My commission expires: 5/25/23

BRENDA C FARMER NOTARY PUBLIC GWINNETT COUNTY, GEORGIA

HALL COUNTY, GEORGIA'S SIGNATURE SECTION

BOARD OF COMMISSIONERS HALL COUNTY GA DEC. 15, 1818

Attestment

By: _____ (SEAL)
Jennifer Rivera, County Clerk

Sworn to and subscribed before me this
8th Day of September, 2022

_____
Notary Comm. Exp. March 18, 2023

ABRIL OLIVAS NOTARY PUBLIC HALL COUNTY, GEORGIA

Hall County, Georgia

By: _____
Richard Higgins, Chairman
Board of Commissioners

APPROVED AS TO FORM:

_____
Van Stephens, County Attorney

Attachments: Appendix "A"
Appendix "B"
Appendix "B.1"
Original Agreement

APPENDIX "A"
TERMS AND CONDITIONS

1. CPL Architects, Engineers, Landscape Architect and Surveyor, D.P.C. (P.C.) shall perform the services defined in this Letter Agreement and Client agrees to pay CPL for said services as set forth in the agreement. In providing services under this Agreement, CPL shall perform in a manner consistent with and limited to that degree of care and skill ordinarily exercised by members of the same profession currently practicing under similar circumstances at the same time and in the same or similar locality. CPL makes no warranty, express or implied, as to its professional services rendered under this Agreement.

2. Construction cost estimates prepared by CPL represents CPL's best judgment as professionals familiar with the construction industry. It is recognized, however, that CPL has no control over cost of labor, materials, or equipment, over contractors' methods of determining bid prices, or over competitive bidding or market conditions. CPL cannot and does not guarantee that proposals, bids, or actual construction costs will not vary from cost estimates prepared by CPL.

3. If requested by Client or if required by the scope of services of the Agreement, CPL shall visit the site at intervals appropriate to the stage of construction to become generally familiar with the progress and quality of the work and to determine in general if the work is proceeding in accordance with the Contract Documents. However, CPL shall not be required to make exhaustive or continuous on-site inspections to check the quality or quantity of the work. CPL shall not have control or charge of and shall not be responsible for construction means, methods, techniques, sequences, or procedures, or for safety precautions and programs in connection with the Work, for the acts or omissions of the contractor, subcontractors, or any other persons performing any of the work, or for the failure of any of them to carry out the work in accordance with the Contract Documents.

4. The cost of permits, fees, toll telephone calls, courier service, reproduction of reports, Drawings, and Specifications, transportation in connection with the Project, and other out of pocket expenses will be reimbursed to CPL by Client at cost plus 15%.

5. CPL shall submit monthly statements for services rendered and for reimbursable expenses incurred. Statements will be based upon CPL's time of billing. Payment is due upon receipt of CPL's Statement. If Client fails to make any payment due CPL for services and expenses within 30 days after the date of CPL's statement therefore, the amounts due CPL shall include a charge at the rate of 1.5% per month (18% per annum), or portion thereof, from said 30th day, and, in addition, CPL may, after giving 30 days' written notice to Client, suspend services under this Agreement until CPL has been paid in full all amounts due.

6. This Agreement may be terminated by either party upon 30 days' written notice should the other party fail substantially to perform in accordance with its terms through no fault to the party initiating termination, or in the event Project is cancelled. In the event of termination, CPL shall be paid the compensation plus Reimbursable Expenses due for services performed to termination date.

7. This Agreement shall be governed by the laws of the State Georgia.

8. The services to be performed by CPL under this Agreement are intended solely for the benefit of the Client. Nothing contained herein shall confer any rights upon or create any duties on the part of CPL toward any persons not a party to this Agreement including, but not limited to, any contractor, subcontractor, supplier, or the agents, officers, employees, insurers, or sureties of any of them.

9. Client and CPL each binds himself and his partners, successors, executors, administrators, and assigns to the other party to this Agreement and to the partners, successors, executors, administrators, and assigns of such other party, in respect to all covenants of this Agreement. Neither Client nor CPL shall assign, sublet, or transfer his interest in this Agreement without the written consent of the other; however, CPL may employ others to assist in the carrying out of duties under this Agreement.

CPL
ARCHITECTURE
ENGINEERING
PLANNING
CPLteam.com

APPENDIX "B"
CPL HOURLY RATES

PRINCIPALS	
Kevin McOmber	$240/HR
Rich Edinger	$210/HR
PROJECT MANAGER	
Rebecca Keefer	$195/HR
ASSISTANT PROJECT MANAGER	
Mark Baumgart	$180/HR
PLANNERS	
Richard Hathcock	$160/HR
Tania Celis Leyva	$150/HR
PLANNING COORDINATOR	
Cyndee Bonacci	$110/HR
ADMINISTRATIVE SUPPORT	
Lori Brothers	$ 75/HR
Beth Farmer	$ 60/HR
AUTO MILEAGE	IRS RATE + 15%
MISCELLANEOUS	COST PLUS 15%

3011 Sutton Gate Dr.
Suite 130
Suwanee, GA 30024
770.831.8000 TEL
CPLTeam.com

APPENDIX "B.1"

Additional hourly rates to Amendment Extension No. 001

On-Call Planning Services

Erosion Control Inspections

Amanda Russell	$150.00
Walter Osorio	$121.00

Building Inspections

Kenny Barber	$150.00
Solomon Teklu	$135.00
Jonathan Tsaku	$135.00

Permit Technician

TBD	$110.00

AGENDA ITEM

Consent Agenda

REPORT TO: **Work Session (07/10/23)**

REPORT TO: **Voting Meeting (07/13/23)**

ITEM NO: 354/2023

SUBJECT: Approve the award of RFQ/P #43-027 Gainesville-Hall Metropolitan Transportation Plan: 2025 Update/Bicycle and Pedestrian Plan Update for the Gainesville-Hall Metropolitan Planning Organization (GHMPO) to RS&H, Inc. of Atlanta, GA, in the amount of $398,500.00.

Meetings:

Work Session Date: 07/10/23 **Voting Meeting Date:** 07/13/23

Executive Summary:

Presenter: SY

Recommendation:
Approve the award of RFQ/P #43-027 Gainesville-Hall Metropolitan Transportation Plan: 2025 Update/Bicycle and Pedestrian Plan Update for the Gainesville-Hall Metropolitan Planning Organization (GHMPO) to RS&H, Inc. of Atlanta, GA, in the amount of $398,500.00.

Purpose of Request:

Approve the award of RFQ/P #43-027 Gainesville-Hall Metropolitan Transportation Plan: 2025 Update/Bicycle and Pedestrian Plan Update for the Gainesville-Hall Metropolitan Planning Organization (GHMPO) to RS&H, Inc. of Atlanta, GA, in the amount of $398,500.00.

History:
Federal planning regulations require that the Gainesville-Hall Metropolitan Organization (GHMPO) update the region's long-range transportation plan. The Bicycle and Pedestrain master plan was adopted nearly a decage ago and needs to be updated to account for recent bicycle and pedestrian work being done. GHMPO is seeking a consultant to develop these two (2) updates into planning documents.

Facts and Issues:
The evaluation committee has chosen RS&H, Inc. as the constutant for this project. RS&H, Inc. was the highest rated vendor by a significant margin, and was rated second after including the pricing proposal. As the cost difference is minimal in the price proposal rankings, the committee decided RS&H, Inc. was still the best option for this project.

Options:

Funding Requested $ 398,500.00

Are funds within current budget?	Yes
Source of Funds	Grant / MPO / General Fund
Does the action involve a Resolution, Ordinance, Contract, Agreement, etc.?	Yes
Has it been reviewed by the County Attorney?	Yes
Is there a deadline for this item?	

Approvals:

Buyer	Submit	Approve	Purchasing
JD	AD	SY	AP
Budget	**Finance**	**Attorney**	**Administration**
TS	WG	VS	CR
Clerk			
JR			

Attachments:

Financial Supplement
Signature Request and Contract
Cost Proposal
Bid Tabulation

HALL COUNTY BOARD OF COMMISSIONERS
FINANCIAL SUPPLEMENT REPORT

AGENDA ITEM 354/2023

Funds Requested: $ 398,500.00

Request Budgeted: Yes

Proposed Source of Funding:

Grant / MPO / General Fund

Budget Transfer Requested:

No

Funding Source Items:

Fiscal Year	Fund	Division	Account	Amount
2024	250-MULTIPLE GRANT FUND	7411-MPO	521000-PROFESSIONAL SERVICES	$173,806.00
2025	250-MULTIPLE GRANT FUND	7411-MPO	521000-PROFESSIONAL SERVICES	$173,806.00
2024	100-GENERAL FUND	1500-GENERAL SERVICES	521000-PROFESSIONAL SERVICES	$25,444.00
2025	100-GENERAL FUND	1500-GENERAL SERVICES	521000-PROFESSIONAL SERVICES	$25,444.00

Budget Transfer Items:

Additional Information/Comments:

Contact for Questions: SY

Phone: 770-297-2604

HALL COUNTY
GEORGIA

POST OFFICE DRAWER 1435
GAINESVILLE, GA 30503

t: 770.535.8270 | f: 770.531.6711

DIRECTOR
Wes Geddings

Hall County Government
FINANCIAL SERVICES

CONTRACT EXECUTION SIGNATURE REQUEST

Date: 06/14/2023

To: Richard Higgins, Chairman, BOC

From: Julie Dorough, Buyer

Your signature is requested to execute the attached bid/contract award documents for:

Bid/Contract No: 43-027

Bid/Contract Name: Gainesville-Hall Metropolitan Transportation Plan: 2025 Update / Bicycle and Pedestrian Plan Update

Department(s) Requesting Contract: Gainesville-Hall Metropolitan Planning Organization

Award Recipient Name: RS & H, Inc.

Date of BOC Approval: 07/13/2023

Contract Description:

☐ Annual Contract ☒ New ☐ Renewal

Prior Year's Spend: N/A

☐ Price Increase Requested Increase Percentage: 0%

☒ Project/Service Contract Awarded Amount: $398,500

☐ Product Contract Awarded Amount: $0

CONTRACT EXECUTION SIGNATURE REQUEST
PRICE INCREASE DETAILS

Bid/Contract No: 43-027

Bid/Contract Name: Gainesville-Hall Metropolitan Plan: 2025 Update / Bicycle and Pedestrian Plan Update – New Contract.

HALL COUNTY
GEORGIA
We have it all in Hall

POST OFFICE DRAWER 1435
GAINESVILLE, GA 30503

t: 770.535.8270 | f: 770.531.6711

DIRECTOR
Wesley Geddings

Hall County Government
FINANCIAL SERVICES

CONTRACT #43-027

For the provision of Services for

Gainesville-Hall Metropolitan Transportation Plan: 2025 Update / Bicycle and Pedestrian Plan Update

ARTICLE #101 - INTRODUCTION

This Contract for the purpose of conducting a Gainesville-Hall Metropolitan Transportation Plan: 2025 Update / Bicycle and Pedestrian Plan Update, (hereinafter "Services") as entered into on June 5, 2023, between; **Hall County, Georgia** (hereinafter "County") located at 2875 Browns Bridge Rd, Gainesville, Georgia 30504, and RS & H, Inc. (hereinafter "Contractor"). Contractor is an entity that is legally registered and qualified, and holding any such licenses and certifications as may be required to render Services to do business in the State of Georgia. County and Contractor are known individually as a "Party" and collectively as the "Parties".

"This Contract is the result of the competitively bid RFQ/P# 43-027, the Contractor's response to the competitive bid, the Scope of Work, Exhibits, Attachments, and references are all incorporated herein by reference. Therefore, in consideration of the terms-and-conditions and mutual promises contained herein, the receipt and sufficiency of which are hereby acknowledged by both parties, the parties hereto agree as follows:

ARTICLE #102 – CONTRACT

A. Contractor agrees to provide the Services to the County as detailed herein and in **Scope of Work**, and for the location and services as described in the RFQ/P #43-027 and the bidder's response.

B. County hereby agrees to the compensation as provided in the attached bidder's response entitled **Exhibit C – Mandatory Cost Proposal Worksheet,** which are herein incorporated thereof by reference, for the cost of $398,500.00 , billed monthly/ quarterly.

ARTICLE #103 - NOTICES:

To the extent that either party to this required to provide notice(s) to the other party in compliance herewith, then the party shall Contract is direct notice(s) to the following persons:

COUNTY PROJECT MANAGER
Michael Haire
Transportation Planning Manager
Gainesville-Hall Metropolitan Planning
2875 Browns Bridge Rd
Gainesville, GA 305074
mhaire@hallcounty.org
770-297-2604

COUNTY ISSUING OFFICER
Julie Dorough
Buyer
Hall County Financial Services
2875 Browns Bridge Rd
Gainesville, GA 30504
jdorough@hallcounty.org
770-535-8270

CONTRACTOR'S CONTACT INFO
Steven Cote
Project Manager
RS & H, Inc.
730 Peachtree St. NW Ste. 430
Atlanta, GA 30308
Steve.cote@rsandh.com
678-528-7220

REMIT-TO ADDRESS
Company's FEIN # _____
PO BOX/DRAWER _____
Enter Legal Company Name
Enter Street Address
Enter City, State, Zip
Enter Email Address
Enter Phone

ARTICLE #104 – NON-EXCLUSIVE RIGHTS:

The Contract is not exclusive. The County reserves the right to select other Contractors to provide the Services similar to those described in this Contract, during the term of the Contract should the need arise or the contractor fail to perform.

ARTICLE #105 – CONTRACT TERM:

A. **Initial Contract Term**. This Contract is effective on the date of signature shown in *ARTICLE #101* by all parties unless a future date is so noted on this contract. The term will last until job is complete, or two years after the date of execution, unless terminated by the parties pursuant to *ARTICLE #107 – REMEDIES AND CONTRACT PERFORMANCE*, thereof.

B. **Contract Renewal. N/A for RFQ/P #43-024** The County shall have the option, in its sole discretion, to renew the Contract for up to **Four (4), One (1) Year Renewal Options**. The price, terms, and conditions in effect at the time of each renewal(s) shall remain the same unless the Contract is amended by mutual agreement. Renewal(s) will depend upon the best interests of the County, available funding, and Contractor's performance. The County may execute its renewal options through the issuance of a Contract Renewal

Document, with the evidence thereof in writing and signature by both Parties. The County does not accept nor acknowledge automatic renewals and shall have no obligations, payment or otherwise, associated therewith.

C. **Contract Extension.** The County and the Contractor may enter into a Contract Extension term past the renewal period to continue the services if this Contract terminates, or is likely to terminate, prior to the making of a new award for the identified Services. The County may with the written consent of Contractor, extend this Contract for such period as may be necessary to afford the County a continuous supply of the identified Services for up to one (1) calendar year or portions thereof.

ARTICLE #106 - CONTRACT AMENDMENTS AND MODIFICATION:

This Contract can only be modified, amended, or added to in writing and fully executed by both parties hereto. This Contract document constitutes the sole and entire Contract and understanding between the parties as to the subject matter hereof, and no verbal promises have been made by either party in relation hereto.

ARTICLE # 107 – REMEDIES AND CONTRACT PERFORMANCE:

In the event that either party to this Contract materially breaches this Contract, including by failure to meet the timetables set forth herein, the non-breaching party shall provide written notice to the breaching party which describes the breach of this Contract. The party whose breach is alleged shall have thirty (30) days from the date of receipt of the written notice to cure the breach or to otherwise negotiate a resolution of the breach.

If the breach has not been cured and the parties hereto have not resolved the issue described in the notice letter by thirty (30) days after receipt of the notice letter, the party authoring the letter shall be entitled to seek any and all remedies allowed by Georgia law, including damages, equitable relief, declaratory relief, specific performance, and/or seeking relief as to any bonds issued hereon. Additional provisions are;

A. **Delay or Impossibility of Performance**. Any failure or delay must be beyond the control of and without the fault or negligence of the Contractor. If the Services to be provided to the County are interrupted by a Force Majeure Event, as defined below, both parties will be entitled to an equitable adjustment to the schedule as well as fees and other payments under this Contract. If delay results from a subcontractor's negligent conduct or failure to perform, the Contractor shall not be excused from compliance with the terms and obligations of the Contract. Epidemics and pandemics are not considered Force Majeure events by the County.

Neither party shall be held liable or responsible to the other party nor be deemed to have defaulted under or breached this Agreement for failure or delay in fulfilling or performing any obligation under this Agreement when such failure or delay is caused by or results from causes beyond the reasonable control of the affected party, including but not limited to fire, floods, embargoes, war, acts of war, insurrections, riots, strikes, lockouts or other labor disturbances, or acts of God; provided, however, that the party so affected shall use reasonable commercial efforts to avoid or remove such causes of nonperformance, and shall continue performance hereunder with reasonable dispatch whenever such causes are removed. Either party shall provide the other party with prompt written notice of any delay or failure to perform that occurs by reason of Force Majeure.

Definition: The term 'force majeure' as defined in Black's Law Dictionary, is 'an event or effect that can be neither anticipated nor controlled. It is a contractual provision allocating the risk of loss if performance becomes impossible or impracticable, especially as a result of an event that the parties could not have anticipated or controlled."

B. Obligations beyond Contract Term. The Contract shall remain in full force and effect to the end of the specified term or until terminated or canceled pursuant to the Contract.

C. Transition Cooperation with the County and Cooperation with other Contractors. Contractor agrees that upon termination of this Contract for any reason, it shall provide sufficient efforts and reasonable cooperation and assistance to the County to ensure an orderly and efficient transition to the County or an alternative Contractor. Further, in the event that the County has entered into or enters into contracts with other Contractors related to the Services, Contractor agrees to cooperate fully with such other Contractors. Contractor shall not engage in any act that will interfere with the performance of work by any other Contractor.

ARTICLE # 108 - TERMINATION:

Either party may terminate this Contract by providing thirty (30) days written notice to the other party at any time. Should either party terminate this Contract prior to the date of automatic termination pursuant to section 4 above, Contractor shall provide the County with all deliverables up to the date of termination (30 days after the notice is provided), and the County shall pay the Contractor for all work properly performed in compliance with the terms of the Contract up to the date of termination.

A. **Termination for Convenience.** Following thirty (30) days written notice, either party may terminate the Contract in whole or in part for any reason without the payment of any penalty or incurring any further obligation to the Contractor.

B. **Termination for Cause**. The occurrence of any one or more of the following events shall constitute cause for the County to declare the Contractor in default of its obligations under the Contract:

1. The Contractor fails to deliver or has delivered nonconforming Services or fails to perform, to the County's satisfaction, any material requirement of the Contract or is in violation of a material provision of the Contract, including, but without limitation, the express warranties made by the Contractor.

2. The County determines that-default is likely to occur.

3. The Contractor fails to make substantial and timely progress toward performance of the Contract.

4. The Contractor becomes subject to any bankruptcy or insolvency proceeding under federal or state law to the extent allowed by applicable federal or state law including bankruptcy laws; the Contractor terminates or suspends its business; or the County reasonably believes that the Contractor has become insolvent or unable to pay its obligations as they accrue consistent with applicable federal or state law.

5. The Contractor has failed to comply with applicable federal, state and local laws, rules, County ordinances, regulations and orders when performing within the scope of the Contract.

6. The Contractor has engaged in conduct that has or may expose the County or the State to liability, as determined in the County's sole discretion; or a material breach of the terms of the Contract by County upon County's failure to cure such material breach after written notice thereof has been delivered in accordance with ARTICLE #108.C. below constitutes cause for the Contractor to declare that the County is in default of its obligations under the Contract.

C. **Notice of Default**. If either party causes one or more of the default events set out in ARTICLE #108, then either party shall issue a written Notice-of-Default to the party that causes one or more of the default events, requesting that the breach or noncompliance be remedied within the period of time specified in the party's Notice-of-Default to the Contractor. If the breach or noncompliance is not remedied within the period of time specified in the written notice, the non-breaching party may:

1. Immediately terminate the Contract for default without additional written notice;

2. In the event of a breach by the Contractor, the County may procure substitute Services from another source and charge the difference

between the Contract and the substitute Contract to the defaulting Contractor; and/or,

3. Enforce the terms and conditions of the Contract and seek any legal or equitable remedies.

C. **Termination Due to Non-Availability of Funds.**
This Contract will terminate immediately and absolutely if the County determines that adequate funds are de-appropriated such that the County cannot fulfill its obligations under the Contract, such determination being at the County's sole discretion and conclusive. County agrees to provide prompt written notice to Contractor in the event of any de-appropriation.

D. **Termination due to Failure of Contractor to Act.**
The County may terminate the Contract for any one or more of the following reasons effective immediately without advance notice:

1. In the event that the Contractor must be certified or licensed as a condition precedent to providing the Services, the revocation or loss of such license or certification may result in immediate termination of the Contract effective as of the date on which the license or certification is no longer in effect.

2. The County determines that the actions, or failure to act, of the Contractor, its agents, employees or sub-Contractors have caused, or reasonably could cause, life, health or safety to be jeopardized.

3. The Contractor furnished any statement, representation, or certification in connection with the Contract or the bidding process, which is materially false, deceptive, criminal activity, incorrect or incomplete.

E. Payment Limitation in Event of Termination. In the event of termination of the Contract for any reason by either party, the County shall pay only those amounts, if any, due and owing to the Contractor for Services actually received and accepted by the County up to and including the date of termination of the Contract and for which the County is obligated to pay pursuant to the Contract.

F. The Contractor's Termination Duties. Upon receipt of notice of termination, the Contractor shall:

1. Cease work under the Contract and take all necessary or appropriate steps to limit disbursements and minimize costs and furnish a report within thirty (30) days of the date of notice of termination, describing the status of all work under the Contract, including, without limitation, results accomplished, conclusions resulting therefrom, and any other matters the County may require.

2. Immediately cease using and return to the County, any personal property or materials, whether tangible or intangible, provided by the County to the Contractor.

3. Comply with the County's instructions for the timely transfer of any active files and work product produced by the Contractor under the Contract.

4. Cooperate in good faith with the County, its employees, agents, and Contractors during the transition period between the notification of termination and the substitution of any replacement Contractor; and

5. Immediately return to the County any payments made by the County for goods and services that were not delivered by the Contractor.

ARTICLE # 109 – NO DEFENSE OR INDEMNIFICATION BY COUNTY:

The parties agree that the County shall not be responsible for defending or indemnifying any Contractor from any claim brought by any third party against the Contractor.

ARTICLE #110 - ASSIGNMENT AND DELEGATION BY CONTRACTOR:

The Contractor shall not assign or delegate this Contract, or any performance required by it, in whole or in part, without the prior express written consent of the County.

ARTICLE #111 – USE OF THIRD-PARTIES (Sub-Contractors):

This Contract is for the benefit of the parties hereto only and is not intended to benefit any third-party or give rise to any duty or causes of action for any third party. All restrictions, obligations and responsibilities of the Contractor under the Contract shall also apply to third parties such as sub-Contractors, if allowed in writing by the County. Any Contract with a subcontractor must also preserve the rights of the County.

ARTICLE #112 – SUPERSEDES FORMER CONTRACTS

Unless otherwise specified in the Contract, this Contract supersedes all prior Contracts or Agreements between the County and the Contractor for the Services provided in connection with the Contract.

ARTICLE #113 - SEVERABILITY:

If any paragraph, sub-paragraph, sentence, clause, phrase, or portion of this Contract is declared invalid or unconstitutional by any Court of competent jurisdiction or if the

provisions of any part of this Contract as applied to any particular situation or set of circumstances shall be declared invalid or unconstitutional, such invalidity shall not be construed to affect the remaining portions of this Contract not so held to be invalid or the application of this Contract to other circumstances not so held to be invalid.

ARTICLE # 114 - RECORDS:

A. **Public Records Request**. The Georgia Open Records Act, as provided in O.C.G.A. § 50-18-70 et seq, requires procurement records and all other records received by or prepared or maintained on behalf of the County, shall be made open to public inspection, unless otherwise provided by law.

B. **Record Retention and Access**. The Contractor shall maintain books, records, and documents in accordance with generally accepted accounting principles and procedures and which sufficiently and properly document and calculate all charges billed to the County throughout the term of the Contract for a period of at least five (5) years following the date of final payment or completion of any required audit, whichever is later. Records to be maintained include both financial records and service records.

ARTICLE # 115 - ADDITIONAL TERMS:

A. The County shall not be bound by any terms and conditions included in any Contractor's literature, packaging, invoice, catalog, brochure, technical data sheet, on-line representation, warranties or service level agreement or other document which attempts to impose any condition in variance with or in addition to the terms and conditions contained herein.

B. The County shall not be bound to any Terms and Conditions of the Contractor that are only accessible by hyper-link. All Terms and Conditions must be in print and approved by the County.

ARTICLE # 116 - WAIVER:

The failure of any party hereto to seek a remedy for any alleged breach of this Contract shall not constitute a waiver of any claim, cause of action, or remedy allowed by Georgia law for breach thereof.

ARTICLE # 117 - CONTRACTOR AND COUNTY RIGHTS AND OBLIGATIONS:

A. The County has the right at any time to require the Contractor to put an immediate stop to any procedure, or the use of any equipment (chemical, material, etc., if applicable) considered by the County to be hazardous (or

toxic) to persons, buildings, or surfaces. The Contractor will utilize acceptable substitutes as quickly as possible. In the event of such replacement, Contractor shall notify County of any resulting replacement, (ii) introduce the individual serving as the replacement to County, and (iii) provide County with a résumé and any other information regarding the individual that may be reasonably requested by County.

B. The County has the right to require the Contractor to reassign or remove any employee or subcontractor's employee from the premises temporarily or permanently when, in the County's sole opinion, the employee is not suitable. The County's decision on this matter shall be final, and Contractor will remove this employee immediately and replace with a person of at least equivalent training, experience and requisite qualifications as quickly as possible, subject to the County's prior approval.

C. Contractor agrees to obtain prior written approval from the County for the use of sub-Contractors to provide the Services described in *SCOPE OF SERVICES* prior to subcontractor's performance of work.

ARTICLE # 118– INSURANCE REQUIREMENT:

A. **Insurance Requirements. N/A-** The Contractor must maintain and warrant to Hall County insurance policies at the Contractor's own expense and must furnish the County with a Certificate of Insurance (COI) providing evidence of proof of coverage at least in the amounts indicated in this subsection. The insurance certificate must list Hall County, Georgia, Hall County Landfill, as the certificate holder and as an additional insured under the commercial general, automobile and umbrella liability policies as follows: "Hall County Government, its Board of Commissioners, its officers, employees and agents, 2875 Browns Bridge Rd, Gainesville, GA 30504".

The policy must protect the Contractor and the County (as a Certificate Holder and Additional Insured) from any claims for bodily injury, property damage, or personal injury covered by the indemnification obligations set forth herein throughout the duration of the Contract.

The Contractor must maintain the following insurance coverage during the term of the Contract, in at least the minimum amounts set forth below, to cover all loss and liability for damages on account of bodily injury, including death therefrom, and injury to or destruction of property caused by or arising from any and all services carried on and any and all work performed by the Contractor pursuant to this Contract:

1. Workers Compensation Insurance (Occurrence) in the amounts of the statutory limits established by the General Assembly of the State of Georgia (A self-insurer must submit a certificate from the Georgia Board of Workers Compensation stating that the Contractor qualifies to pay its own workers compensation claims.). In addition, the Contractor must require all sub-Contractors occupying the premises or performing work under the Contract to obtain an insurance certificate showing proof of Workers Compensation Coverage with the following minimum coverage:

a.	Bodily injury by accident - per employee	$ 100,000
b.	Bodily injury by disease - per employee	$ 100,000
c.	Bodily injury by disease – policy limit	$ 500,000

2. Commercial General Liability Policy with at least the following minimum coverage:

a.	Each Occurrence Limit	$1,000,000
b.	Personal & Advertising Injury Limit	$1,000,000
c.	General Aggregate Limit	$2,000,000
d.	Products/Completed Ops. Aggregate Limit	$2,000,000

Automobile Liability with at least the minimum coverage: $1,000,000
Combined Single Limit to cover Any Vehicle, leased or rented by the Contractor

3. Umbrella Liability, Excess Liability per Occurrence $2,000,000
Aggregate $2,000,000

It shall be the responsibility of the Contractor to require all of its sub-Contractors to maintain Commercial General Liability insurance with business automobile liability coverage with companies and limits as stated above, and to provide a certificate evidencing that such insurance is in effect upon request. Endorsement must be provided with the insurance certificate.

B. **Insurance Certificates and General Requirements.** No Contract performance shall occur unless and until the County receives required insurance certificates.

The insurance certificate must reference the Contract number assigned by the County.

C. The Contractor understands and agrees that the foregoing policies will not be canceled, or not renewed or allowed to lapse for any reason until at least thirty (30) days prior written notice has been given to the County, or until such time as other valid and effective insurance coverage acceptable in every respect to the County and providing protection equal to protection called for in the policies referenced in this section shall have been received, accepted, and acknowledged by the County. Certificates of insurance showing such coverage to be in force shall be filed with the County prior to commencement of any work under the Contract. The foregoing policies shall be obtained from insurance companies licensed to do business in Georgia and, unless waived or modified in writing by the County, shall be an insurer with a minimum A.M. Best Rating of "A-". All such coverage shall remain in full force and effect during the term and any renewal or extension thereof. The insurance certificate must be submitted with this Contract.

D. **Waiver of Subrogation.** There is no waiver of subrogation rights by either Party with respect to insurance.

ARTICLE # 119 – NO WAIVER:

A. **Authority to Enter into Contract.** The Contractor represents and warrants that it has full authority to enter into and perform its obligations under the Contract and that the Contract constitutes a legal, valid, and binding obligation upon the Contractor in accordance with its terms. The representatives of the parties hereto also represent and warrant that they are authorized to sign this Contract on behalf of each party hereto."

B. **Solicitation.** The Contractor warrants that no person or selling agency (except bona fide employees or selling agents maintained for the purpose of securing

business) has been employed or retained to solicit and secure the Contract upon an agreement or understanding for commission, percentage, brokerage or contingency.

C. **Vehicles and Equipment. With the exception of specified County Owned Equipment and Vehicles listed in Exhibit X,** Contractor warrants that CDL drives will not use any other County owned vehicles or equipment in the performance of this Contract without express written consent. Contractor shall be responsible for providing all transportation necessary to deliver Services under the Contract.

ARTICLE # 120 – INTELLECTUAL PROPERTY RIGHTS & OWNERSHIP:

Contractor agrees it will not use the name or any intellectual property, including but not limited to, County trademarks or logos in any manner, including commercial advertising or as a business reference, without the expressed prior written consent of the County.

ARTICLE # 121 - COMPENSATION:

A. The County will pay the Contractor for the Services provided pursuant to this Contract and in accordance with the prices quoted and conditions set forth in the Bidder's response **on Exhibit C – Mandatory Cost Proposal Worksheet,** which is attached hereto and incorporated into this Contract as if fully set forth herein. Payments will be made monthly in arrears to the Contractor after acceptance of the Contractor's delivered Services by the County, and after receipt of undisputed invoice to the County.

B. Prices quoted shall be firm and fixed throughout the term of this Contract, unless otherwise Amended or Modified by mutual agreement.

C. Cost may be prorated for Services added or removed under this Contract to align cost with the remaining term of Contract.

D. It is understood that this bid or proposal is made without collusion or fraud. Contractor understands and acknowledges that collusive bidding is a violation of state and federal law and may result in the cancellation of the Contract.

ARTICLE # 122 - COUNTY PAYMENT TO CONTRACTOR:

A. The County will issue a Notice to Proceed to the Contractor, and Purchase Order(s) (herein after 'PO'). The terms of this Contract shall be incorporated by reference into any and all PO(s) issued prior to the expiration or termination of this Contract. The County will issue the PO by electronic mail (e-mail) to the Contractor's representative in *ARTICLE #103 - NOTICES*. A PO is considered

"issued" when the e-mail containing the PO is sent by the County to the Contractor.

The Contractor shall not deliver any Services, equipment, devices, or components thereof until authorized in writing by the County through issuance of a PO, which shall provide a commencement Notice-to-Proceed date. Any work, including but not limited to travel, preliminary meetings, planning, etc., performed outside of the terms and conditions of and before the issuance of the PO will not be considered for payment. Contractors are not to begin work or ship any product on any verbal communication from within the County. The County will not be liable for payment for any work or product with the issuance of a verbal communication.

The Scope of Services shall remain in effect from the Notice to Proceed to completion of the project. The Parties agree that the County will not pay or otherwise compensate the Contractor for any Services, materials, equipment, devices or components thereof outside of the Scope of Work and/or beyond the term of this Contract, unless specifically authorized in writing as evidenced by an amendment (see *ARTICLE #106 - CONTRACT AMENDMENTS &, MODIFICATION*), a time extension letter, or as otherwise authorized by the County.

B. **Invoice/Payment.**

1. Contractor shall invoice the County via email **monthly or quarterly** solely to accountspayable@hallcounty.org and only after the County inspects and accepts the Services provided. Receipt of the Services does not constitute acceptance. Invoice amounts shall not exceed the Contractor's pricing set forth in *ARTICLE #102.*
2. Each invoice shall include the Contractor's current "Remit to" address; a description of the Services provided; the invoice amount; the Contract number; and the associated PO number issued. Each properly prepared invoice must be sent in accordance with the instructions listed on the PO. Standard payment terms are net 30 days (N30) in arrears from the date the invoice is accepted, following delivery of the Services.
3. The County does not pay for services not yet received but only in arrears.
4. The Contractor shall be solely responsible for paying all costs, expenses and charges it incurs in connection with its performance under the Contract.

C. **Unsatisfactory Performance; Delay of Payment.**

1. If the County determines that the quality of the Services provided the County's Project Manager identified in *ARTICLE #103* shall issue a written notice to Contractor. Contractor agrees that upon receipt of the written notice, it shall make every effort to correct the deficiency (ies) within the timeframe prescribed therein. If the Contractor fails to timely correct the deficiencies, the County reserves the right to delay payment pursuant to

this *ARTICLE #122* or terminate the Contract (*ARTICLE #108 – TERMINATION PROVISIONS*).

2. **Delay of Payment Due to Contractor's Failure.** If the County determines that the Contractor has failed to perform or deliver any Services as required by the Contract, the Contractor shall not be entitled to any compensation under the Contract until such Services are delivered and accepted. In this event, the County may withhold that portion of the Contractor's compensation, which represents payment for Services that were not delivered. To the extent that the Contractor's failure to perform or deliver in a timely manner, if not excused by a Force Majeure event, causes the County to incur costs, the County may deduct the amount of such incurred costs from any amounts payable to Contractor. The County's authority to deduct such incurred costs shall not in any way affect the County's authority to terminate the Contract.

D. **Set-Off Against Sums Owed by the Contractor.** In the event that the Contractor owes the County any sum under the terms of the Contract, pursuant to any judgment, or pursuant to any law, the County may set off the sum owed by the Contractor against any sum owed to the Contractor, in the County's sole discretion.

E. **Final Payment.** Contractor shall issue an invoice for final payment to the County no later than thirty (30) days following the expiration or termination date of the Contract.

F. The Contractor must not "Factor or Assign Payments" to another or a financial institution. The County will only pay the party to whom it is contracted with. The County will not in any circumstances pay a third-party.

ARTICLE #123 – PERFORMANCE AND PAYMENT BONDS------ N/A for RFQ/P #43-027

The County must receive all bonding instruments prior to the commencement of any work.

ARTICLE #124 – RETAINAGE (if applicable on this contract)

ARTICLE #125 – VENUE AND GOVERNING LAW

The parties agree that this Contract shall be interpreted, construed, and enforced in accordance with the laws of the State of Georgia. To the extent that either party may bring a legal suit to enforce the terms of this Contract, including suit in equity, the parties agree and consent to file any such suit in the Superior Court of Hall County, Georgia.

ARTICLE # 126 - NOTICE OF INTENT TO LITIGATE

Contractor hereby agrees not to file any civil action of disputes or claims relating to the Contract except after first giving thirty days (30) written notice to the County of the claim and the intent to initiate a civil action.

ARTICLE # 127- GEORGIA SECURITY AND IMMIGRATION COMPLIANCE ACT:

A. By signing this Contract, the Contractor certifies that prior to and throughout the performance of all applicable work under this Contract it will remain in full compliance with all federal and state immigration laws, including but not limited to 8 U.S.C. § 1324a and the Georgia Security and Immigration Compliance Act (O.C.G.A. §13-10-90 et seq.), as amended by the Illegal Immigration Reform and Enforcement Act of 2011, regarding the verification of employment eligibility of employees under the Immigration Reform and Control Act of 1986. Contractor will ensure that only persons who are citizens or nationals of the United States or non-citizens authorized under federal immigration laws are employed to perform services under this Contract or any subcontract or sub-subcontract hereunder.

B. Contractor further certifies its compliance with the aforementioned federal and state immigration laws set forth by signing a sworn affidavit, the Georgia Security and Immigration Compliance Act Affidavit, notarized by an Official Notary Public, and obtaining the same affidavits from any sub-contractor providing services pursuant to this Contract.

ARTICLE # 128 – ORDER OF PRECEDENCE:

In the event of any inconsistency, ambiguity, or conflict among the specific provisions of the Contract and the Contractor's Response, the order of precedence shall be as follows:

A. First, any amendments to the Contract, including all Exhibits thereto.
B. Second, the Contract itself, including all Exhibits thereto.
C. Third, Attachments appended to the Contract.

ARTICLE # 129– CONTRACT EXHIBITS AND ATTACHMENTS:

The Parties mutually acknowledge that any following Exhibits and Attachments listed below made a part of this Contract, as though expressly written in the RFQ/P documents and the bidder's response, are-herein-incorporated into this contract by reference.

EXHIBIT C - Mandatory Cost Proposal

ARTICLE # 130 - ENTIRE CONTRACT:

This Contract, as executed and approved, shall constitute the entire agreement between the Parties and supersedes all other prior and contemporaneous statements, agreements, and understandings between the Parties. No written or oral statements, agreements, or understandings that are not set out, referenced, or specifically incorporated in this Contract shall in any way be binding or of effect between the Parties.

ARTICLE # 131– VALIDITY

If any paragraph, sub-paragraph, sentence, clause, phrase or any portion of this agreement shall be declared invalid or unconstitutional by any Court of competent jurisdiction or if the provisions of any part of this agreement as applied to any particular situation or set of circumstances shall be declared invalid or unconstitutional, such invalidity shall not be constructed to affect the portions of this agreement not so held to be invalid or the application of this agreement to other circumstances not so held to be invalid. The parties hereby declare that this is the intent of the parties to this agreement is to provide for separate and divisible parts.

ARTICLE #132 – SALES TAX EXEMPTION STATUS

The County is exempt from Federal Excise Taxes and from Georgia State and Local Sales and Use Taxes on the Services. The Contractor may request a copy of the County's Georgia Sales and Use Tax Exemption Certificate.

ARTICLE #133 – HOLD HARMLESS AGREEMENT

The successful respondent hereby agrees to indemnify, hold free and harmless, Hall County Government, County Commissioners, its agents, servants, employees, officers, directors and elected officials, or any other person(s) against any loss or expense. This includes attorney fees, because of any liability imposed by law upon the County, except in cases of the County's sole negligence, sustained by any person(s) on account of bodily injury or property damage arising out of or in the consequence of this agreement.

ARTICLE # 134 – CONTRACT TERMS AND CONDITIONS

1. All purchases must comply The Official Code of Hall County Sections 3.10.010 – 3.10.190.
2. The Terms and Conditions set forth herein shall supersede and govern over all Contractor's Terms and Conditions or Service Level Agreements.
3. Hall County, Georgia, herein referred to as 'The County', retains the right to 'red-line' sections of the Supplier's Terms and Conditions if such are in conflict with the best interest of the County.
4. Acceptance of a Purchase Order (PO) and delivery of Goods or Services serves as the Supplier's full and complete acceptance of The County's Terms and Conditions stated therein.
5. The terms; supplier, vendor, bidder, offeror, Contractor, Contractor, designer, distributor, dealer or manufacturer or otherwise purveyor or source of supply or performance of service shall mean one-and-the-same, herein denoted as 'Supplier' for goods and 'Contractor' for services.

6. Furthermore, the terms; goods, materials, commodities, components, drawings, drafts, renderings, plans, physical or digital, software, SaaS, Engineering, Architectural, capital asset equipment, vehicles, heavy earth-moving or other equipment, purchased or leased, or other such deliverables are herein denoted as 'Goods' and shall mean one-and-the-same.
7. 'Services' shall mean all services, either financial, advisory, consultative, labor, staff augmentation, construction, rehabilitation, restoration, repair, support or maintenance, communication, telephony, internet, TV or streaming, pest control, grounds maintenance, custodial and janitorial, street or paved surfaces cleaning, drain cleaning or otherwise where services are offered for consideration.
8. The County's payment terms are Net 30 days. The County may consider Prompt Pay Terms if offered at least five percent (5%) of the total cost and not less than fifteen (15) days terms. A supplier simply offering a discount does not constitute the County's acceptance of such, and the County is not be bound to the offer.
9. The Supplier shall transfer and deliver all goods or services described on the attached PO for the consideration set forth herein.
10. The Supplier shall only deliver goods and services as described on the PO and within the Scope of Work and the Supplier's Bid Response.
11. The Supplier shall not construe any verbal consent to purchase goods or services as valid.
12. The County does not accept substitutions of services or goods that do not comply with the Scope of Work or Specifications in accordance with the Standard of Care set forth in the Purchase Order, Contract or Agreement, unless mutually agreed in writing by both parties.
13. The County does not accept automatic renewals with the exception of monthly subscription services.
14. The County only pays for services rendered in arrears. The County does not pay for services not yet rendered.
15. The County participates in Cooperative Purchasing Agreements, State of Georgia Statewide Contracts, and other state, local, Intergovernmental Agreements, Memorandums-of-Understanding and other such Agreements.
16. In all cases, the jurisdiction shall be the State of Georgia, County of Hall, for arbitration or other legalities
17. The Supplier has a legal right to deliver the services as described herein.
18. The County shall have the right to inspect all goods or services at the time and place of delivery.
19. Vendor agrees not to assign in full or part of the Contract to another party without the County's express written consent. Any attempted assignment or delegation shall void and make ineffectual for all purposes unless made in conformity with this paragraph.
20. The County is exempt from Federal Excise Tax and Georgia Sales and Use Tax.
21. This issuance of the PO shall not violate the Code of Ethics and Conflicts of Interest for Public Officers and Employees for Government Service set forth in the 2020 Section 45-1020 *et seq.* of the Official Code of Georgia Annotated and the Official Code of Hall County Section 3.10.070 governing Ethics.
22. All goods and services supplied pursuant to this PO shall, unless otherwise noted, must conform to all of the descriptions, specifications, Exhibits and attachments contained in the Bid Solicitation upon which a PO is based in accordance with the Standard of Care and all the terms, conditions, and specifications of the Bid Solicitation are incorporated herein by reference and made a part hereof.

23. Any-and-all media production, recordings, videos, photography, artwork, plates, engravings, and other printed or digital media materials paid in full by The County is considered County property and shall be delivered to The County upon request.
24. Invoices submitted to The County will reflect the language of the PO with the PO Number printed on each invoice submitted.
25. The Supplier may be suspended, terminated, or debarred if it is determined that the Supplier has made false certification(s) or has violated such certification(s) by failure to carry out the requirements herein.
26. The Supplier certifies that it and its subcontractors are not been debarred, suspended, or declared ineligible by any agency of the County, or State of Georgia or as defined in the Federal Acquisition Regulation (FAR) 48 C.F.R. Ch. 1 Subpart 9.4.
27. The Supplier certifies that the Supplier is not currently engaged in an active or pending lawsuit or other grievance, injunction, or levy against the County.
28. The County does not pay late fees nor interest charges.
29. The Supplier shall charge the County the exact amount of freight, delivery, handling and insurance charges.

[Signature Page Follows]

IN WITNESS WHEREOF, said Parties have hereunto affixed their signature and seal on the day, month, and year first above written:

RS & H, Inc.

By: Daveitta Jenkins Knight

Title: Vice President, Atlanta Area Leader

Print Name: Daveitta Jenkins Knight

Sworn to and subscribed before me this

13TH Day of JUNE, 2023

Notary Public: Julie S. Huff

Notary commission expires: JANUARY 1, 2024

[Locus Sigilli]

JULIE S HUFF NOTARY PUBLIC FULTON COUNTY, GEORGIA MY COMMISSION EXPIRES JANUARY 01, 2024

HALL COUNTY, GEORGIA

By: _____

Richard Higgins, Chairman
Hall County Board of Commissioners

Attestment: _____

County Clerk

Approved as to Form

William J. Linkous III, County Attorney

RFQ/P # 43-027

Mandatory Cost Proposal

NOTE: This Cost Proposal MUST be submitted in a separate, sealed envelope with the RFQ/P Number and bid due date/time written in lower left corner of the envelope.

The below signed Contractor agrees to provide all services outlined in this RFQ/P for the lump sum cost of: $ 398,500.

Company Name: RS&H, Inc.

Signed:

Typed Name: Christian B. Jackson, PE, LEED AP

Job Title: Senior Vice President

Date: 5/23/2023

RFQ/P # 43-027

Mandatory Cost Proposal

NOTE: This Cost Proposal MUST be submitted in a separate, sealed envelope with the RFQ/P Number and bid due date/time written in lower left corner of the envelope.

The below signed Contractor agrees to provide all services outlined in this RFQ/P for the lump sum cost of: $ 398,500 .

Company Name: RS&H, Inc.

Signed: 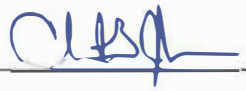

Typed Name: Christian B. Jackson, PE, LEED AP

Job Title: Senior Vice President

Date: 5/23/2023

RFQ/P #43-027 GHMPO Transport update/Bicycle & Ped Plan Bid Tab	Croy Engineering	POND	Gresham Smith	RS & H
	Gainesville, GA	Peachtree Corners, GA	Buford, GA	Atlanta, GA
	PRICE	PRICE	PRICE	PRICE
COST PROPOSAL	$475,730.00	$400,000.00	$397,499.00	$398,500.00
	4	3	1	2

	Croy Engineering	POND	Gresham Smith	RS & H
MANDATORY SCORED QUESTIONS	709.375	791.875	795	842
RANK	4	3	2	1
PRICING	$475,730.00	$400,000.00	$397,499.00	$398,500.00
RANK	4	3	1	2

AGENDA ITEM

Consent Agenda

REPORT TO: **Work Session (07/10/23)**

REPORT TO: **Voting Meeting (07/13/23)**

ITEM NO: 384/2023

SUBJECT: Approve the award of Task Order 2024-001 under RFP/Q #42-002 Demand Services for Resurfacing, Paving, and Full Depth Reclamation of various County roads for the FY 2024 resurfacing program to Allied Paving Contractors, Inc. of Pendergrass, GA, in the estimated amount of $13,079,799.25.

Meetings:

Work Session Date: 07/10/23

Voting Meeting Date: 07/13/23

Executive Summary:

Presenter: BN

Recommendation:
Approve

Purpose of Request:

Approve the award of Task Order 2024-001 under RFP/Q #42-002 Demand Services for Resurfacing, Paving, and Full Depth Reclamation of various County roads for the FY 2024 resurfacing program to Allied Paving Contractors, Inc. of Pendergrass, GA, in the estimated amount of $13,079,799.25.

History:

Allied Paving is a current vendor for Hall County and has been for several years. They are in very good standing within the County.

Facts and Issues:

The task order is associated with the annual resurfacing program. The funding sources include both LMIG and SPLOST VIII. The resurfacing mileage is approx. 30.03 miles.

Both on-call vendors responded to this task order. Allied Paving responded with pricing and Pittman Construction Company responded with a no-bid.

Options:

Funding Requested $ 13,079,799.25

Are funds within current budget? Yes

Source of Funds SPLOST VIII & LMIG

Does the action involve a Resolution, Ordinance, Contract, Agreement, etc.?	Yes
Has it been reviewed by the County Attorney?	Yes
Is there a deadline for this item?	2023-07-10

Approvals:

Buyer	Submit	Approve	Purchasing
AP	BN	BN	AP
Budget	**Finance**	**Attorney**	**Administration**
TS	WG	VS	CR
Clerk			
JR			

Attachments:

Financial Supplement
Allied Paving Bid Response
No Bid Response
Project Map
Road List and Map Key

HALL COUNTY BOARD OF COMMISSIONERS
FINANCIAL SUPPLEMENT REPORT

AGENDA ITEM 384/2023

Funds Requested: $ 13,079,799.25

Request Budgeted: Yes

Proposed Source of Funding:

SPLOST VIII & LMIG

Budget Transfer Requested:

No

Funding Source Items:

Fiscal Year	Fund	Division	Account	Amount
2024	221-STATE ROAD GRANT FUND	4220-ROAD MAINTENANCE	541400-INFRASTRUCTURE	$2,046,711.00
2024	324-SPLOST VIII	4971-ENGINEERING	541400-INFRASTRUCTURE	$11,033,088.25

Budget Transfer Items:

Additional Information/Comments:

Contact for Questions: BN

Phone: 770 531-6800

HALL COUNTY
GEORGIA
We have it all in Hall

POST OFFICE DRAWER 1435
GAINESVILLE, GA 30503

t: 770.535.8270 | f: 770.531.6711

DIRECTOR
Wesley Geddings

Hall County Government
FINANCIAL SERVICES

Task Order #2024-001

Resurfacing of 30.03 Miles of County Roads

Demand Services Contract # 42-002
June 7, 2023

PROJECT DESCRIPTION

Hall County, Georgia, Board of Commissioners, request a bid be made for resurfacing of approximately 30.03 miles of County Roads. Award is subject to the terms and conditions of Contract RFP #42-002, Demand Services for Resurfacing, Paving, and Full Depth Reclamation. Contractors are to enter their bids on the attached *FY 2024 Resurfacing Specs and Segments* Bid Schedule section and respond by e-mail to apenick@hallcounty.org by Thursday, June 22, 2023 by 2:00 pm EST. No bid may be withdrawn for a period of one-hundred twenty days (120) days after time has been called on the date of opening.

Please sign below and return this Task Order with the completed *FY 2024 Resurfacing Specs and Segments* bid form.

IN WITNESS WHEREOF, said Parties have hereunto affixed their signature and seal on the day, month, and year first above written:

Allied Paving Contractors, Inc.
(Full Legal Corporate Name)

By: _____

Title: Vice President

Print Name: Bryan Jones

Sworn to and subscribed before me this 22nd Day of June, 2023

Notary Public: _____

Notary commission expires: 1-26-25

[Affix Seal – Seal or Stamp]

Allied Paving Contractors, Inc. CORPORATE SEAL 2004 Georgia

KRISTI SUN HALL NOTARY PUBLIC Jackson County Georgia My Commission Expires 01-26-2025

HALL COUNTY, GEORGIA

By: _____
Richard Higgins, Chairman
Hall County Board of Commissioners

Attestment: _____
County Clerk

APPROVED AS TO FORM

_____
William J. Linkous III, County Attorney

Sincerely,

Andy Penick
Purchasing Manager
Hall County, Georgia

NOTES:

2023 RESURFACING OF VARIOUS HALL COUNTY ROADS

BACKGROUND

This project is for the resurfacing of approximately **30.03 miles** of various County roads. The selected contractor will be required to install asphalt pavement as specified in the specifications, and any required striping.

PRE-CONSTRUCTION MEETING

Contractor is required to attend a pre-construction meeting scheduled by the Hall County Project Engineer. Contractor is required to provide, in hard copy and disk format, a construction schedule produced in Microsoft Project at the time of the scheduled pre-construction meeting.

SCHEDULE

The contractor will be responsible for preparing all roads on the contract. The line item for patching shall include the contractor removing the defective material, disposing of the waste, delivering the asphalt, and installing the new hot mix asphalt. This patching work may be accomplished by milling and inlaying with full depth asphalt or by other means as approved by the project engineer. The project engineer shall specify the locations and depth of the patching done by the contractor. The contractor may estimate a depth of 2" of asphalt patch for bidding purposes.

The completion date for this project is **June 30, 2024.** Equal time extension will be given if the anticipated awarding date of the contract is delayed.

Again please note, required completion dates are the dates that all work is to be completed. Hall County expects Contractor to begin work within 10 business days of Notice to Proceed and to maintain adequate progress to ensure the contract is completed by completion date. Contractor to include any anticipated inclement weather days and Holiday days within the allowed contract time. See Attachment "A" for information on inclement weather days. Hall County may consider any unusual number of inclement weather days for time extension.

Contractor is to notify Blair Reynolds, Hall County Project Engineer, at 770-531-6800 to keep him advised of any weather delay days, delays associated to utility facility relocation delays, or other delays in contract time.

TRAFFIC CONTROL

The contractor shall provide Traffic Control to include all items necessary to maintain safe travel for the public. Traffic control shall include, but is not limited to: Road Closed signs, Barricades, Detour Signs, Flagging, Work Zone Signs, Low/Soft Shoulder Signs, etc. All traffic control devices and work zones shall comply with the Manual on Uniform Traffic Control Devices (MUTCD), latest edition. All traffic control items shall be maintained by the Contractor at all times throughout the length of the project.

INSPECTIONS

Contractor shall schedule and coordinate resurfacing work on all roads with Blair Reynolds, Hall County Project Engineer at 770-531-6800.

A Hall County Engineer or Engineering Inspector will be on-site during the entire resurfacing process for those all projects. Work hours will be Monday through Friday, 8am to 5pm. Please contact the Project Engineer to schedule resurfacing work at least 24 hours in advance.

GENERAL

All design, detailing, fabrication, construction, and construction vehicles shall conform to the State of Georgia Department of Transportation, Standard Specifications of Transportation Systems, 2001 edition, unless otherwise noted.

Contractor is required to properly dispose of all removed driveway concrete. No concrete shall be buried within the right-of-way.

Quantities are approximate only. Actual quantities for pay items will be derived by field measurements and weight measurements.

Contractor is to field verify the widths of all roads. Resurfacing shall be over existing asphalt only.

The Contractor shall install all required striping as quickly as possible but no longer than 24 hours after the road is completed unless directed otherwise by the project engineer.

The Contractor is required to construct shoulders on this project.

The Contractor shall be responsible for the installation and maintenance of Low/Soft Shoulder signs. These signs shall be maintained until vegetation is established on the shoulders.

The Contractor shall be responsible for the replacement of any and all Traffic Signal Loops located on this project.

The Contractor shall deliver **all millings** to the Hall County Landfill located at **1700 Oakbrook Drive, Gainesville, GA 30507**.

The Contractor shall utilize the Leveling Electronics on the Asphalt Spreader on any roads that are longer than **1 mile** in length unless otherwise directed by the Hall County Inspector.

The following roads are the **only** roads to be considered for **crack sealing**: Barkers Bend Drive, Blackstock Road, Bryant Quarter Road, Cagle Mill Road (Sec. 1), Gilstrap Circle, Greggs Road, Leach Road, Looper Lake Point, McConnell Drive, Mud Creek Road (Sec. 2), Roberta Circle, Spainhill Circle, Sunset Avenue, Whitehall Road (Sec. 1) and Whiting Road.

SHOULDER CONSTRUCTION

Any borrow/waste/disposal areas or borrow material needed as part of this bid item in order to complete shoulder construction is included in the overall bid item. Contractor is required to delineate borrow/waste/disposal areas to the Hall County Project Engineer for her approval. Erosion and Sedimentation Control measures are required on any borrow/waste/disposal areas as part of the overall bid price.

Contractor is to build shoulders on all base and pavement projects as directed by the Project Engineer. Shoulder construction consists of building up the shoulder elevation to match the new pavement elevation, and extending this new built up material to the point where the shoulder begins to drop off into the ditch or fill slope. This build up is not expected to be greater than six inches in depth. The minimum required shoulder width is 2 feet. Shoulder to drain away from the pavement whenever possible. In the case where the existing shoulder was previously too high, the Contractor will tie in from the new pavement elevation to an appropriate point to provide drainage. Whenever possible, Contractor is expected to extend the shoulder width so as to retain the same shoulder width that occurs due to the higher elevation of the pavement. Contractor is required to smooth and compact the new shoulder material with clean material that is free from rocky material that could create voids or cause poor turf establishment. Contractor is required to remove all grubbing debris from new shoulder material. Contractor is required to utilize an unerodible soil type so as to minimize repair trips at the contractor's expense. Contractor is required to sweep new pavement as shoulder construction activities proceed.

The Contractor is to install temporary shoulders as needed to ensure that the elevation difference between the pavement edge and the shoulder is a maximum of two and one half (2 ½) inches or less. Permanent shoulders shall be constructed as soon as possible after the road is completed. Payment for temporary shoulders shall be included in the unit price for shoulder construction. There will be no separate payment for temporary shoulders.

BIDDING INFORMATION

Hall County reserves the right to delete or add quantities to best serve the interests of the county.

BID SCHEDULE

2023 LOCAL RESURFACING PROGRAM

LINE NO.	GDOT ITEM	ITEM	QUANTITY	UNIT	UNIT AMOUNT	AMOUNT
	PAVING AND RESURFACING ITEMS					
0005	318-3800	Aggregate Surface Course	100	TN	$ 60.00	$ 6,000.00
0010	402-1812	Recycled Asph Conc Leveling, Incl Bitum Matl & H Lime	10,347	TN	$ 145.00	$ 1,500,315.00
0015	402-3100	Recycled Asph Conc 9.5 MM Superpave, Type I, Gp 1 or Blend 1, incl bitum matl & H lime	12,677	TN	$ 143.50	$ 1,819,149.50
0020	402-3130	Recycled Asph Conc 12.5 MM Superpave, Type II, Gp 2 only, incl bitum matl & H lime	5,089	TN	$ 135.00	$ 687,015.00
0030	402-3103	Recycled Asph Conc 9.5 MM Superpave, Type II, Gp 2 only, incl bitum matl & H lime	13,282	TN	$ 140.00	$ 1,859,480.00
0035	413-1000	Bitum, Tack Coat	38,378	GL	$ 5.50	$ 211,079.00
0040	441-0016	Driveway Concrete, 6 in thk	100	SY	$ 70.00	$ 7,000.00
0045		Sawed Joints in Exist Pavement - PCC	100	LF	$ 3.00	$ 300.00
0050		Asphalt Patching	32,500	TN	$ 161.50	$ 5,248,750.00
0055		Crack Sealing	19.09	MI	$ 10,500.00	$ 200,445.00
0060	432-5010	Mill Asphalt Concrete Pavement, Variable Depth	10,000	SY	$ 2.75	$ 27,500.00
0065	444-1000	Shoulder Construction	64.61	MI	$ 4,200.00	$ 271,362.00
0070	706-1002	Turf Establishment, Tp B	15.66	AC	$ 4,200.00	$ 65,772.00
	SIGNING AND MARKING ITEMS					
0075	150-1000	Traffic Control	1.00	LUMP	$ 515,000.00	$ 515,000.00
0100	653-1504	Thermoplastic Solid Traffic Stripe, 12 in, White	850.00	LF	$ 6.90	$ 5,865.00
0105	653-2501	Thermoplastic Solid Traffic Stripe, 5 in, White	43.97	LM	$ 6,325.00	$ 278,110.25
0110	653-2502	Thermoplastic Solid Traffic Stripe, 5 in, Yellow	52.72	LM	$ 6,325.00	$ 333,454.00
0115	653-4501	Thermoplastic Skip Traffic Stripe, 5 in, White	1.00	GLM	$ 4,025.00	$ 4,025.00
0120	653-4502	Thermoplastic Skip Traffic Stripe, 5 in, Yellow	1.00	GLM	$ 4,025.00	$ 4,025.00
0125	653-1704	Thermoplastic Solid Traffic Stripe, 24 in, White	200.00	LF	$ 13.80	$ 2,760.00
0130	653-1706	Thermoplastic Solid Traffic Stripe, 24 in, Yellow	200.00	LF	$ 13.80	$ 2,760.00
0135	653-1804	Thermoplastic Solid Traffic Stripe, 8 in, White	1,000.00	LF	$ 4.60	$ 4,600.00
0140	653-1806	Thermoplastic Solid Traffic Stripe, 8 in, Yellow	1,000.00	LF	$ 4.60	$ 4,600.00
0145	652-0120	Thermoplastic Type 2 Arrows	27.00	EA	$ 172.50	$ 4,657.50
0155	653-0220	Thermoplastic Pvmt Marking, Word, Tp 2	5.00	EA	$ 287.50	$ 1,437.50
0160	653-0240	Thermoplastic Pvmt Marking, Word, Tp 4	5.00	EA	$ 287.50	$ 1,437.50
0170		Thermoplastic Rumble Strips	6.00	EA	$ 1,150.00	$ 6,900.00
					TOTAL AMOUNT	$ 13,079,799.25

2023 LOCAL RESURFACING PROGRAM

ROAD NAME	SUPER-PAVE MIX DESIGN	STRIPING				BEGIN POINT	END POINT
		THERMO CENTER	THERMO EDGE	STOP BARS			
				Int. #1 (each)	Int. #2 (each)		
HALL COUNTY							
ART LIGHT DRIVE	9.5mm @ 137.5lb/sy Design Type I, Gp 1 or BI 1 & L	N	N	1	1	BETHEL ROAD	ELMER TRUELOVE ROAD
BARKERS BEND DRIVE	9.5mm @ 137.5lb/sy Design Type I, Gp 1 or BI 1 & L	Y	Y	1	0	YELLOW CREEK ROAD	TERMINUS
BEVERLY ROAD	12.5mm @ 220lb/sy Design Type II, Gp 2 only & L	Y	Y	1	0	WHITE SULPHUR ROAD	GAINESVILLE CITY LIMIT
BLACKSTOCK ROAD	9.5mm @ 137.5lb/sy Design Type I, Gp 1 or BI 1 & L	Y	Y	0	1	US 129S (ATHENS HWY)	JACKSON CO LINE
BRYANT QUARTER ROAD	9.5mm @ 165lb/sy Design Type II, Gp 2 only & L	Y	Y	1	1	SR 52	SR 82
BYERS RIDGE	9.5mm @ 137.5lb/sy Design Type I, Gp 1 or BI 1 & L	N	N	1	0	MOUNTAIN VIEW ROAD	TERMINUS

2023 LOCAL RESURFACING PROGRAM

ROAD NAME	SUPER-PAVE MIX DESIGN	STRIPING				BEGIN POINT	END POINT
		THERMO CENTER	THERMO EDGE	STOP BARS			
				Int. #1 (each)	Int. #2 (each)		
CAGLE MILL ROAD (SEC. 1)	9.5mm @ 137.5lb/sy Design Type I, Gp 1 or BI 1 & L	Y	Y	1	0	JULIAN BAUGH ROAD	GRAVEL
CASH ROAD	12.5mm @ 220lb/sy Design Type II, Gp 2 only & L	Y	Y	7	6	HOG MOUNTAIN ROAD	UNION CHURCH ROAD
ELLISON FARM ROAD	9.5mm @ 165lb/sy Design Type II, Gp 2 only & L	Y	Y	1	1	TANNERS MILL ROAD	JACKSON CO LINE
FIELDGREEN COURT	9.5mm @ 137.5lb/sy Design Type I, Gp 1 or BI 1 & L	N	N	1	0	WOODHURST WAY	TERMINUS
FINCHER DRIVE	9.5mm @ 137.5lb/sy Design Type I, Gp 1 or BI 1 & L	N	N	1	0	BROWNS BRIDGE ROAD	TERMINUS
GILSTRAP CIRCLE	9.5mm @ 137.5lb/sy Design Type I, Gp 1 or BI 1 & L	N	N	1	0	CLEVELAND HIGHWAY	TERMINUS
GREENWOOD DRIVE	9.5mm @ 137.5lb/sy Design Type I, Gp 1 or BI 1 & L	N	N	1	1	SARDIS ROAD	TERMINUS
GREGGS ROAD	9.5mm @ 165lb/sy Design Type II, Gp 2 only & L	Y	Y	1	1	BURTON MILL ROAD	BOB BRYANT ROAD

2023 LOCAL RESURFACING PROGRAM

ROAD NAME	SUPER-PAVE MIX DESIGN	STRIPING				BEGIN POINT	END POINT
		THERMO CENTER	THERMO EDGE	STOP BARS			
				Int. #1 (each)	Int. #2 (each)		
HALL STREET (SEC. 1)	9.5mm @ 137.5lb/sy Design Type I, Gp 1 or BI 1 & L	Y	N	1	1	ATLANTA HIGHWAY	STRINGER AVENUE
LAWSON CIRCLE	9.5mm @ 137.5lb/sy Design Type I, Gp 1 or BI 1 & L	Y	N	1	0	HIGHLAND CIRCLE	TERMINUS
LEACH ROAD	9.5mm @ 137.5lb/sy Design Type I, Gp 1 or BI 1 & L	Y	Y	1	1	CHESTATEE ROAD	WILLIE ROBINSON ROAD
LOOPER LAKE POINT	9.5mm @ 137.5lb/sy Design Type I, Gp 1 or BI 1 & L	Y	N	1	0	LOOPER LAKE ROAD	TERMINUS
MARTIN ROAD	9.5mm @ 165lb/sy Design Type II, Gp 2 only & L	Y	Y	4	3	ATLANTA HIGHWAY	WINDER HIGHWAY
McCONNELL DRIVE	9.5mm @ 137.5lb/sy Design Type I, Gp 1 or BI 1 & L	Y	N	4	4	ATLANTA HIGHWAY	NEAR WAY
MIKE DRIVE	9.5mm @ 137.5lb/sy Design Type I, Gp 1 or BI 1 & L	N	N	1	1	PAUL DRIVE	CORA DRIVE
MIMOSA STREET	12.5mm @ 220lb/sy Design Type II, Gp 2 only & L	N	N	1	1	ATLANTA HIGHWAY	INDUSTRIAL BOULEVARD

2023 LOCAL RESURFACING PROGRAM

ROAD NAME	SUPER-PAVE MIX DESIGN	STRIPING				BEGIN POINT	END POINT
		THERMO CENTER	THERMO EDGE	STOP BARS			
				Int. #1 (each)	Int. #2 (each)		
MUD CREEK ROAD (SEC. 2)	9.5mm @ 165lb/sy Design Type II, Gp 2 only & L	Y	Y	1	1	OLD CORNELIA HIGHWAY	SR 365
POND FORK WAY	9.5mm @ 137.5lb/sy Design Type I, Gp 1 or BI 1 & L	N	N	1	1	LEAFVIEW DRIVE	TERMINUS
POND VIEW COURT	9.5mm @ 137.5lb/sy Design Type I, Gp 1 or BI 1 & L	N	N	1	0	WAUKA VIEW DRIVE	TERMINUS
PRICE WAY	9.5mm @ 137.5lb/sy Design Type I, Gp 1 or BI 1 & L	N	N	1	0	SARDIS ROAD	TERMINUS
RENEE CIRCLE	9.5mm @ 137.5lb/sy Design Type I, Gp 1 or BI 1 & L	N	N	1	0	HARMONY CHURCH ROAD	TERMINUS
RHONDA LANE	9.5mm @ 137.5lb/sy Design Type I, Gp 1 or BI 1 & L	N	N	1	0	RENEE CIRCLE	TERMINUS
RIVER BIRCH LANE	9.5mm @ 137.5lb/sy Design Type I, Gp 1 or BI 1 & L	N	N	1	1	EVERGREEN HOLLOW DRIVE	TERMINUS
ROBERTA CIRCLE	9.5mm @ 137.5lb/sy Design Type I, Gp 1 or BI 1 & L	N	N	1	0	WAHOO DRIVE	TERMINUS

2023 LOCAL RESURFACING PROGRAM

ROAD NAME	SUPER-PAVE MIX DESIGN	STRIPING				BEGIN POINT	END POINT
		THERMO CENTER	THERMO EDGE	STOP BARS			
				Int. #1 (each)	Int. #2 (each)		
SENECA VALLEY	9.5mm @ 137.5lb/sy Design Type I, Gp 1 or BI 1 & L	N	N	1	0	MUSCADINE TRAIL	TERMINUS
SMALL WOODS LANE	9.5mm @ 137.5lb/sy Design Type I, Gp 1 or BI 1 & L	N	N	1	0	INDIAN TRAIL	TERMINUS
SPAINHILL CIRCLE	9.5mm @ 137.5lb/sy Design Type I, Gp 1 or BI 1 & L	Y	N	0	0	BROWNS BRIDGE ROAD	TERMINUS
SUNSET AVENUE	9.5mm @ 137.5lb/sy Design Type I, Gp 1 or BI 1 & L	N	N	1	1	YOUNG DRIVE	TERMINUS
T. MAYNARD ROAD	9.5mm @ 137.5lb/sy Design Type I, Gp 1 or BI 1 & L	Y	Y	1	1	CLARKS BRIDGE ROAD	S. BLACK ROAD
TANYARD BRANCH ROAD	9.5mm @ 137.5lb/sy Design Type I, Gp 1 or BI 1 & L	N	N	1	0	DUNLAP DRIVE	TERMINUS
WALDRIP DRIVE	9.5mm @ 137.5lb/sy Design Type I, Gp 1 or BI 1 & L	N	N	0	0	BROWNS BRIDGE ROAD	TERMINUS
WHITEHALL ROAD (SEC. 1)	9.5mm @ 165lb/sy Design Type II, Gp 2 only & L	Y	N	1	0	OLD CORNELIA HIGHWAY	GRAVEL

2023 LOCAL RESURFACING PROGRAM

ROAD NAME	SUPER-PAVE MIX DESIGN	STRIPING				BEGIN POINT	END POINT
		THERMO CENTER	THERMO EDGE	STOP BARS			
				Int. #1 (each)	Int. #2 (each)		
WHITING ROAD	9.5mm @ 165lb/sy Design Type II, Gp 2 only & L	Y	Y	0	1	McEVER ROAD	MOUNTAIN VIEW ROAD
WOOD CREEK PLACE	9.5mm @ 137.5lb/sy Design Type I, Gp 1 or BI 1 & L	N	N	1	0	TRUELOVE ROAD	TERMINUS
WOODHURST WAY	9.5mm @ 137.5lb/sy Design Type I, Gp 1 or BI 1 & L	N	N	1	0	WILLOW WIND DRIVE	TERMINUS

ATTACHMENT "A"

WEATHER DAYS

Completion time will not be extended for normal bad weather. The time for completion as stated in the Contract Documents includes due allowance for calendar days on which work cannot be performed out-of-doors. For the purpose of this Contract, the Contractor agrees that he may expect to lose calendar days due to weather in accordance with the following table.*

Jan. 22 days	May 4 days	Sept. 4 days
Feb. 16 days	June 6 days	Oct. 5 days
Mar. 11 days	July 8 days	Nov. 9 days
April 7 days	Aug. 6 days	Dec. 15 days

The Contractor agrees an extreme weather day shall be defined as a day that rain exceeds one tenth (.10) of an inch **and** the average temperature fails to exceed 40 degrees F, **and** the maximum temperature does not exceed 50 degrees F. The temperature and rain data should come from appropriate local weather stations. A weather day will also be defined as a day in which less than seventy-five percent (75%) of the normal labor and equipment force can operate for five (5) hours due to weather-related site conditions. Contract time will be extended by the number of days in which actual weather days in a given month exceed the number of weather days given in the table above.

Delays caused by acts of God, (e.g., fire, unusual storms, floods, tidal waves, earthquakes,) strikes, labor disputes, freight embargos and shortages of materials shall be considered as unavoidable delays insofar as they prevent the Contractor from proceeding with at least seventy-five percent (75%) of the normal labor and equipment force for at least five (5) hours per day toward completion of the current controlling item on the accepted work schedule.

Should abnormal conditions prevent the work from beginning at the usual starting time, or prevent the Contractor from proceeding with seventy-five percent (75%) of the normal labor and equipment force for a period of at least five (5) hours per day, and the crew is dismissed as a result thereof, the Contractor will not be charged for a working day whether or not conditions change so that the major portion of the day could be considered to be suitable for work on the controlling item.

For delays which the Contractor considers to be unavoidable he/she shall submit to GaDOT Area Engineer and Hall County Engineer offices complete information demonstrating the effect of the delay on the controlling operation in his construction schedule. The submission shall be made within three (3) calendar days of the occurrence claimed to be responsible for the unavoidable delay.

* Based on a study of NOAA records from Dallas, Texas and Alpharetta, Georgia and Atlanta, Georgia Airport Weather Reporting Stations from 1967 through 1972 by the Cobb County School District. Reporting records were reviewed again in 1977 and 1982. Changes were not significant and no changes have been made in the original schedule, which is now based on a 15 year weather record.

HALL COUNTY
GEORGIA
We have it all in Hall

POST OFFICE DRAWER 1435
GAINESVILLE, GA 30503

t: 770.535.8270 | f: 770.531.6711

DIRECTOR
Wesley Geddings

Hall County Government
FINANCIAL SERVICES

Task Order #2024-001

Resurfacing of 30.03 Miles of County Roads

Demand Services Contract # 42-002
June 7, 2023

Mon 6/26/2023 9:06 AM

Dona L. Welch <donalee@pittman-construction.com>

RE: Task Order # 2024-001 questions:

To Andy Penick (Purchasing)

Cc Jim Bronaugh; Matthew Baker

This message was sent with High importance.
This message is part of a tracked conversation. Click here to find all related messages or to open the original flagged messag

CAUTION: This email originated from outside of the organization. Do not click links or open attachments unless you recognize th

Andy:

Pittman Construction Company elected not to Bid this Task Order.

Please keep us on your list for other projects in Hall County.

Thank you for the Opportunity

Dona Lee Welch
Pittman Construction Company
Company Phone #: (770) 922-8660 EXT 149
Cell: (770) 853-5934

PROPOSED FY24
LOCAL RESURFACING PROGRAM
HALL COUNTY, GEORGIA

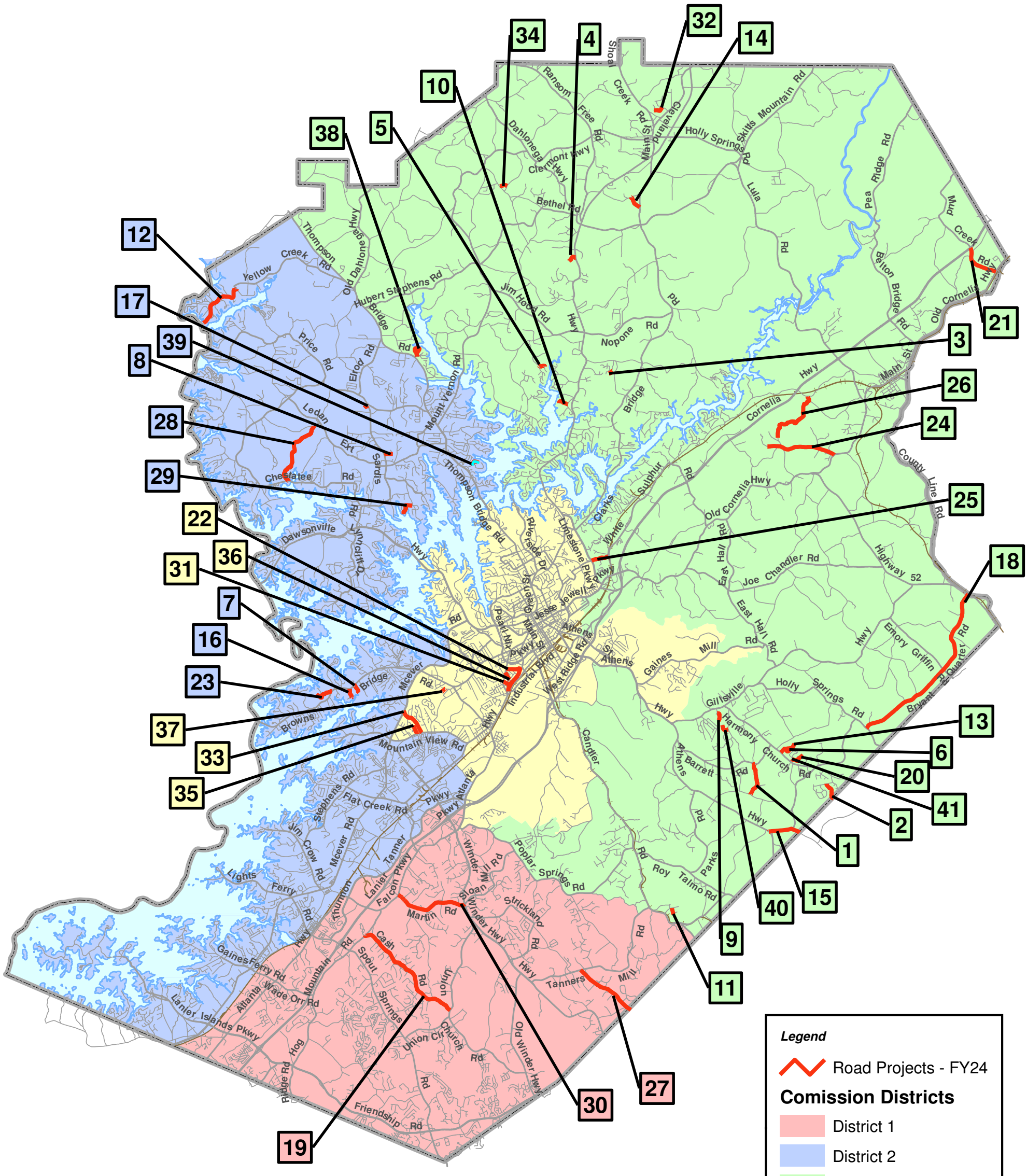

Hall County Community Development & Infrastructure
Public Works & Utilities
Engineering Division

Gainesville - Hall County GIS

Date: 5/5/2023

0 0.5 1 2 3 4 5 6 7 8 9 10 11 12 Miles

PROPOSED FY24 LOCAL RESURFACING PROGRAM

MAP_KEY	RATING_RANK	PROJECT	COMM_DIST	MILEAGE	RD_BEGIN	RD_END	TOTAL_RATING	RATING_YEAR	PROJECT_COST
1	1	Greggs Road	3	0.882	Burton Mill Road	Bob Bryant Road	73	2022	$ 410,130
2	2	Pond Fork Way	3	0.443	Leafview Drive	Terminus	73	2022	$ 205,995
3	3	Seneca Valley	3	0.106	Muscadine Trail	Terminus	72	2022	$ 49,290
4	4	Gilstrap Circle	3	0.235	Cleveland Highway	Terminus	72	2022	$ 109,275
5	5	Lawson Circle	3	0.167	Highland Circle	Terminus	72	2022	$ 77,655
6	6	Rhonda Lane	3	0.164	Renee Circle	Terminus	72	2022	$ 76,260
7	7	Waldrip Drive	2	0.225	Browns Bridge Road	Terminus	72	2022	$ 104,625
8	8	Greenwood Drive	2	0.219	Sardis Road	Terminus	72	2022	$ 101,835
9	9	River Birch Lane	3	0.236	Evergreen Hollow Drive	Terminus	72	2022	$ 109,740
10	10	Small Woods Lane	3	0.269	Odum Smallwood Road	Terminus	72	2022	$ 125,085
11	11	Sunset Avenue	3	0.163	Kenimer Road	Terminus	72	2022	$ 75,795
12	12	Barkers Bend Drive	2	1.449	Yellow Creek Road	Terminus	72	2022	$ 673,785
13	13	Renee Circle	3	0.451	Harmony Church Road	Terminus	72	2022	$ 209,715
14	14	T. Maynard Road	3	0.354	Clarks Bridge Road	S. Black Road	72	2022	$ 164,610
15	15	Blackstock Road	3	0.85	US 129 (Athens Hwy)	Jackson County Line	72	2022	$ 395,250
16	16	Fincher Drive	2	0.24	Browns Bridge Road	Terminus	71	2022	$ 111,600
17	17	Price Way	2	0.107	Sardis Road	Terminus	71	2022	$ 49,755
18	1	Bryant Quarter Road	3	4.702	SR 52	SR 82	80	2023	$ 2,186,430
19	2	Cash Road	1	3.141	Hog Mountain Road	Union Church Road	76	2023	$ 1,460,565
20	3	Fieldgreen Court	3	0.212	Woodhurst Way	Terminus	75	2023	$ 98,580
21	4	Mud Creek Road (Sec. 2)	3	1.022	SR 365	Old Cornelia Highway	75	2023	$ 475,230
22	5	McConnell Drive	4	1.035	Atlanta Highway	Near Way	74	2023	$ 481,275
23	6	Spainhill Circle	2	0.506	Browns Bridge Road	Terminus	74	2023	$ 235,290
24	7	Whitehall Road (Sec. 1)	3	1.772	Old Cornelia Highway	Gravel	74	2023	$ 823,980
25	8	Beverly Road	3	0.442	White Sulphur Road	Gainesville City Limit	73	2023	$ 205,530
26	9	Cagle Mill Road (Sec. 1)	3	1.674	Julian Baugh Road	Gravel	73	2023	$ 778,410
27	10	Ellison Farm Road	1	1.662	Tanners Mill Road	Jackson County Line	73	2023	$ 772,830
28	11	Leach Road	2	1.844	Chestatee Road	Willie Robinson Road	73	2023	$ 857,460
29	12	Looper Lake Point	2	0.422	Looper Lake Road	Terminus	73	2023	$ 196,230
30	13	Martin Road	1	1.912	Atlanta Highway	Winder Highway	73	2023	$ 889,080
31	14	Mimosa Street	4	0.25	Atlanta Highway	Industrial Boulevard	73	2023	$ 116,250
32	15	Pond View Court	3	0.265	Wauka View Drive	Terminus	73	2023	$ 123,225
33	16	Whiting Road	4	0.742	McEver Road	Mountain View Road	73	2023	$ 345,030
34	17	Art Light Drive	3	0.2	Bethel Road	Elmer Truelove Road	72	2023	$ 93,000
35	18	Byers Ridge	4	0.24	Mountain View Road	Terminus	72	2023	$ 111,600
36	19	Hall Street (Sec. 1)	4	0.213	Atlanta Highway	Stringer Avenue	72	2023	$ 99,045
37	20	Mike Drive	4	0.101	Paul Drive	Ophelia Drive	72	2023	$ 46,965
38	21	Roberta Circle	3	0.482	Wahoo Drive	Terminus	72	2023	$ 224,130
39	22	Tanyard Branch Road	2	0.193	Dunlap Drive	Terminus	72	2023	$ 89,745
40	23	Wood Creek Place	3	0.243	Truelove Road	Terminus	72	2023	$ 112,995
41	24	Woodhurst Way	3	0.198	Willow Wind Drive	Terminus	72	2023	$ 92,070

AGENDA ITEM

Consent Agenda

REPORT TO: **Work Session (07/10/23)**

REPORT TO: **Voting Meeting (07/13/23)**

ITEM NO: 394/2023

SUBJECT: Approval and authorization for the Chairman to execute an Early Acquisition Request to the Georgia Department of Transportation (GDOT) regarding four (4) parcels on the Spout Springs Road Phase II Project; authorization for the Chairman to execute any and all additional documents necessary to effectuate the transaction, subject to review and approval by the County Attorney.

Meetings:

Work Session Date: 07/10/23

Voting Meeting Date: 07/13/23

Executive Summary:

Presenter: BN

Recommendation:
Approve

Purpose of Request:
Approval and authorization for the Chairman to execute an Early Acquisition Request to the Georgia Department of Transportation (GDOT) regarding four (4) parcels on the Spout Springs Road Phase II Project; authorization for the Chairman to execute any and all additional documents necessary to effectuate the transaction, subject to review and approval by the County Attorney.

History:

Facts and Issues:
The request is for parcels 43,44, 64, and 73. These Individual parcels will be submitted to the Board of Commissioners for approval as the acquisition process progresses. SPLOST VIII funds will be the funding source for the acquisitions.

Options:

Funding Requested $ 2,809,000.00

Are funds within current budget? Yes

Source of Funds SPLOST VIII

Does the action involve a Resolution, Ordinance, Contract, Agreement, etc.?	No
Has it been reviewed by the County Attorney?	Yes
Is there a deadline for this item?	

Approvals:

Submit	Approve	Budget	Finance
WS	BN	EW	WG

Attorney	Administration	Clerk
WLI	CR	JR

Attachments:

Financial Supplement
1 - GDOT Early Acquisition Worksheet
2 - GDOT Prelim Cost Estimate
3 - Early Acquisition Environmental Evaluation

HALL COUNTY BOARD OF COMMISSIONERS
FINANCIAL SUPPLEMENT REPORT

AGENDA ITEM 394/2023

Funds Requested: $ 2,809,000.00

Request Budgeted: Yes

Proposed Source of Funding:

SPLOST VIII

Budget Transfer Requested:

No

Funding Source Items:

Fiscal Year	Fund	Division	Account	Amount
2024	324-SPLOST VIII	4971-ENGINEERING	541100-LAND	$2,423,093.00
2024	324-SPLOST VIII	4971-ENGINEERING	521000-PROFESSIONAL SERVICES	$385,907.00

Budget Transfer Items:

Additional Information/Comments:

Contact for Questions: BN

Phone: 770-297-2696

GDOT | Early Right-of-Way Acquisition Worksheet- LOCAL ACQUISITION

PI #: PI 0015280
County: Hall
Is the acquisition for the entire corridor or for specific parcel(s)? Specific parcel(s)
If for a specific parcel(s), provide parcel(s) number(s): 43,44,64,73

- Please attach a map showing the location of the parcel(s).

STIP/TIP NO:GH-023 PI 0015280
Local Government Hall County GA incorporated within a federally funded project, may acquire property prior to the completion of the environmental review process (i.e., approval of the NEPA document) for the subject project. This work sheet will determine if the property is eligible for acquisition with

1. Entirely local or state funds with no current or future federal participation [23 CFR 710.501(b) and 710.507];
2. State funds [or local contribution] initially but intend to seek future federal credit [23 CFR 710.501(c)];
3. State funds initially but intend to seek future reimbursement [23 CFR 710.501(d)]; or
4. Federal funds [23 CFR 710.501(e)].

Early Acquisition Funding: Local

Source of Early Acquisition Funding: Project funds

- If project funds, are funds available in the appropriate fiscal year? ☒ Yes ☐ No ☐ N/A

Preliminary estimated cost of early acquisition: $2,809,000.00

Candidate parcel(s) selected for advancement for Early Acquisition Right-of-Way must undergo the following evaluation in order to demonstrate compliance with 23 CFR 710.501 & 23 USC 108 and 23 CFR 710.507 and determine eligibility for scenario 1, 2, 3 or 4, as noted above. Please note that the subject parcel may NOT be a protective buy or hardship acquisition as defined in 23 CFR 710.503(a).

Adequate resource identification must be conducted beforehand to determine if the property poses environmental concerns. Has environmental resource identification been completed? ☒ Yes ☐ No

START: Receive Environmental Study Layout/Start Environmental Studies (P6 activity 11412) from PI0009679	9/5/2011
FINISH: Completion date: Environmental Resource Identification Complete (P6 activity 11499) from PI0009679	7/10/2012

EARLY ACQUISITION CANNOT PROCEED IF ENVIRONMENTAL RESOURCE IDENTIFICATION IS NOT COMPLETE.

Per 23 CFR 710.501, the parcel CANNOT be a property protected by Section 4(f), i.e.,

- Be part of a historic property or district (as defined by Section 106 of the National Historic Preservation Act);
- Contain an archaeological site worthy of preservation in place; or
- Be a public park, recreation area, wildlife for waterfowl refuge.

Furthermore, the Department will carefully consider acquiring the parcel if, following future consultations, it may influence the final alignment decision.

	Yes	No
• Does it contain threatened or endangered species and thus potentially be subject to Section 7 consultation in accordance with Section 7 of the Endangered Species Act?	☒	☐
• Does it contain extensive hazardous material and mitigation costs are not known?	☐	☒
• Does it contain a cemetery or burials?	☐	☒

TABLE 1 – REQUIREMENTS

Early Acquisition Requirements Checklist (23 CFR 710.501 & 710.507) NOTE: All boxes must be checked in the appropriate column to qualify	**Local/State Funds No Future Fed Participation**	**State Funds/Local Contribution Future Fed Credit**	**State Funds Future Fed Reimburse**	**Federal Funds**
Can be lawfully obtained by the state or local agency	☒	☐	☐	☐
Not a 4(f) property	☒	☐	☐	☐
Acquisition & relocation comply with Uniform Act	☒	☐	☐	☐
State agency comply with Title VI	☒	☐	☐	☐
Early acquisition does not influence NEPA decision to construct	☒	☐	☐	☐
Early acquisition does not influence consideration of alternatives	☒	☐	☐	☐
Early acquisition does not influence selection of design or location	☒	☐	☐	☐
State has a mandatory, comprehensive & coordinated land use, environmental & transportation planning process under state law			☐	
Governor has determined in advance that the acquisition is consistent with state plans & is consistent with state transportation planning process under 23 USC 135			☐	☐
Acquisition will not cause significant adverse environmental impacts either from the early acquisition or cumulative effect of multiple early acquisitions				☐
Will be acquired through negotiation without threat or use of condemnation				☐
Will not reduce or eliminate benefits under Title VI or Uniform Act				☐
Early acquisition project in the appropriate STIP (& TIP, if appropriate)				☐
NEPA complete for early acquisition				☐

TABLE 2 - ACKNOWLEDGEMENT OF FUTURE REQUIREMENTS FOR THE EARLY ACQUISITION

Acknowledgement of future requirement following early acquisition (23 CFR 710.501 & 710.507)	**Local/State Funds No Future Fed Participation**	**State Funds/Local Contribution Future Fed Credit**	**State Funds Future Fed Reimburse**	**Federal Funds**
Property is incorporated into the project to which credit will be applied		☐		
Amount of credit – current fair market value OR historic acquisition cost; apply consistently		☐		
State selects the alternative for which property was acquired for			☐	
Prior to approval for federal participation, NEPA et. al. complied with			☐	
Reimbursement of acquisition costs is based on usual costs to acquire			☐	
Real property interests cannot be developed in anticipation of the transportation project until NEPA is complete for entire project				☐
Must be incorporated into property within 20 years of reimbursement			☐	
If option to purchase at a later date given, not eligible for relocation assistance	☒	☐	☐	☐

Completion of Table 1 demonstrates that the subject parcel(s) has met the requirements shown in 23 CFR 710.501 and 710.507 and thus is eligible for acquisition with local/state funds; no current or future federal participation.

By signing this form (next page), the Local official, Approver and Concurring parties acknowledge the future requirements noted in Table 2 associated with this early acquisition.

Preparer (Local): _____ _____

Preparer's Name: Lynn Wigington — Date

Preparer's Position/Title: Program Manager – Right of Way and Land Acquisition

Preparer's Firm/Agency: CROY Engineering

Reviewer: _____ _____

Reviewer's Name: Jorge Gomez — Date

Reviewer's Title : Assistant Public Works Director – Hall County Community Development and Infrastructure

Local Official Approval: _____ _____

Local Official Approval Reviewer's Name: Frank Miller — Date

Local Official Approver's Title (program manager or higher): County Engineer

Local Government – Hall County Community Development and Infrastructure

Concurrence: _____ _____

Concurring Party's Name: Srikanth Yamala — Date

Concurring Party's Title : Director of Community Development and Infrastructure

Local Government – Hall County Community Development and Infrastructure

_____ _____

Concurring Party's Name: Russ Danser, AICP — Date

Concurring Party's Title (Environmental): Senior Environmental Project Manager

Local Government – Edwards-Pitman Environmental Services Consultant for Spout Springs Phase II Project

Approver: _____ _____

Approver's Name: Zachary Propes — Date

Approver's Title : County Administrator

Local Government – Hall County Georgia

*For parcels being acquired with **federal funds**, a Categorical Exclusion (CE) will be prepared and submitted to FHWA for their approval for the acquisition of the parcel(s) only. Any impacts expected to result from the proposed project will be evaluated in the NEPA document for the project as a whole.*

Attachment: Parcel(s) location map

GEORGIA DEPARTMENT OF TRANSPORTATION
PRELIMINARY ROW COST ESTIMATE SUMMARY

Date: 6/12/2023
Revised:

Project: Spout Springs Road Phase 2
County: Hall
PI: 15280

Description: Spout Springs Road Widening
Project Termini: Thompson Mill Road to Union Circle

Existing ROW: Varies
Parcels: 4
Required ROW: Varies

Land and Improvements		$2,423,092.50
Proximity Damage	*$0.00*	
Consequential Damage	*$96,500.00*	
Cost to Cures	*$0.00*	
Trade Fixtures	*$0.00*	
Improvements	*$1,320,000.00*	
Valuation Services		$18,000.00
Legal Services		$40,200.00
Relocation		$232,000.00
Demolition		$60,000.00
Administrative		$35,500.00
TOTAL ESTIMATED COSTS		$2,808,792.50
TOTAL ESTIMATED COSTS (ROUNDED)		***$2,809,000.00***

Prepared By: Greg Malcolm — Gregory N. Malcolm — 6/12/2023
Print Name — Signature — Date

Cost Estimation Supervisor : _____
Print Name — Signature — Date

NOTE: Superviser is only attesting that the estimate was completed using the correct information provided for the the project. The Supervisor is not attesting to property values or the accuracy of the market value estimations provided in this report. No Market Appreciation is included in this Preliminary Cost Estimate.

Comments:

allsop

Georgia Department of Transportation
Preliminary ROW Cost Estimate Worksheet

Project/County/PI Spout Springs Road Phase 2 Hall 15280

		A	B	C	D
	Land and Improvements	**Agriculture**	**Residential**	**Commercial**	**Industrial**
1	Estimate Low (ac)	$20,000.00	$60,000.00	$0.00	$0.00
2	Estimate High (ac)	$50,000.00	$125,000.00	$0.00	$0.00
3	Estimate Used (ac)	$35,000.00	$75,000.00	$0.00	$0.00
4	Fee Simple Area (ac)	0.38	2.40	0.00	0.00
5	Fee Simple Estimate	$13,440.00	$179,925.00	$0.00	$0.00
6	Perm Esmt Area (ac)	0.00	0.00	0.00	0.00
7	Perm Esmt Factor	75%	75%	75%	75%
8	Perm Esmt Estimate	$0.00	$0.00	$0.00	$0.00
9	Temp Esmt Area (ac)	0.04	0.35	0.00	0.00
10	Temp East Factor	20%	20%	40%	40%
11	Temp Esmt Estimate	$280.00	$5,250.00	$0.00	$0.00
12	Proximity Damages	$0.00	$0.00	$0.00	$0.00
13	Consequential Damages	$0.00	$96,500.00	$0.00	$0.00
14	Cost to Cures	$0.00	$0.00	$0.00	$0.00
15	Improvements	$404,000.00	$916,000.00	$0.00	$0.00
16	Trade Fixtures	$0.00	$0.00	$0.00	$0.00
17					
18	PROPERTY TYPE TOTALS	$417,720.00	$1,197,675.00	$0.00	$0.00
19			SUB TOTAL PROPERTY TYPES		$1,615,395.00
20			Counter Offers and Condemnation Increases		$807,697.50
21					
22			**GRAND TOTAL LANDS AND IMPROVEMENTS**		$2,423,092.50

Georgia Department of Transportation
Preliminary ROW Cost Estimate Worksheet

Project/County/PI Spout Springs Road Phase 2 Hall 15280

		A	B	C	D
	Valuation Services	**Agriculture**	**Residential**	**Commercial**	**Industrial**
1	Appraisals (# of Parcels)	1	3	0	0
2	Estimated Fees (per Parcel)	$3,600.00	$3,600.00	$5,000.00	$5,000.00
3	TOTAL APPRAISALS	$3,600.00	$10,800.00	$0.00	$0.00
4	Sign Estimates	0	0	0	0
5	Estimated Fees	$1,000.00	$1,000.00	$1,000.00	$1,000.00
6	TOTAL SIGN ESTIMATES	$0.00	$0.00	$0.00	$0.00
7	Specialty Reports	0	0	0	0
8	Estimated Fees	$2,500.00	$2,500.00	$2,500.00	$2,500.00
9	TOTAL SPECIALTY REPORTS	$0.00	$0.00	$0.00	$0.00
10	Septic/Well Reports	0	0	0	0
11	Estimated Fees	$2,500.00	$2,500.00	$2,500.00	$2,500.00
12	TOTAL SEPTIC/WELL REPORTS	$0.00	$0.00	$0.00	$0.00
13					
14					
15					
16	TOTAL VALUATION FEES	$3,600.00	$10,800.00	$0.00	$0.00
17			SUB TOTAL VALUATION SERVICES		$14,400.00
18			Updates and Incidentals (Min $2,500 or 25%)		$3,600.00
19			**GRAND TOTAL VALUATION SERVICES**		$18,000.00

Georgia Department of Transportation
Preliminary ROW Cost Estimate Worksheet

Project/County/PI Spout Springs Road Phase 2 Hall 15280

		A	B	C	D
	Legal Services	**Parcels**	**Estimated Fees**		**TOTALS**
1	Meeting with Attorney	4	$125.00		$500.00
2	Preliminary Titles	4	$200.00		$800.00
3	Closing and Final Title	4	$300.00		$1,200.00
4	Recording Fees	4	$50.00		$200.00
5	Condemnation Filing	1	$5,000.00		$5,000.00
6	Litigation Costs	1	$25,000.00		$25,000.00
7	Updates and Incidentials	1	$7,500.00		$7,500.00
8					
9					
10					
11					
12					
13					
14					
15					
16					
17			**GRAND TOTAL LEGAL SERVICES**		$40,200.00

Georgia Department of Transportation
Preliminary ROW Cost Estimate Worksheet

Project/County/PI Spout Springs Road Phase 2 Hall 15280

		A	B	C	D
	Relocation	**Displacements**	**Estimated Costs**		**TOTALS**
1	Business Displacement		$30,000.00		$0.00
2	Residential Tenant		$35,000.00		$0.00
3	Residential Owner	4	$55,000.00		$220,000.00
4	Pro-Rata Taxes	4	$1,500.00		$6,000.00
5	Property Pin Replacement	4	$1,500.00		$6,000.00
6					
7					
8					
9					
10					
11					
12					
13					
14					
15					
16					
17			**GRAND TOTAL RELOCATION**		$232,000.00

Georgia Department of Transportation
Preliminary ROW Cost Estimate Worksheet

Project/County/PI Spout Springs Road Phase 2 Hall 15280

		A	B	C	D
	Demolition	**Items/Improvements**	**Estimated Costs**		**TOTALS**
1	Residential Structures	4	$15,000.00		$60,000.00
2	Commercial Structures		$25,000.00		$0.00
3	Hotels/Apartments		$60,000.00		$0.00
4	UST's - Dispensers		$50,000.00		$0.00
5	Billboards		$8,000.00		$0.00
6	Signs - Light Standards		$1,500.00		$0.00
7	Water Vaults		$15,000.00		$0.00
8	Gas/Water Service Separation		$2,500.00		$0.00
9					
10					
11					
12					
13					
14					
15					
16					
17			**GRAND TOTAL DEMOLITION**		$60,000.00

Georgia Department of Transportation
Preliminary ROW Cost Estimate Worksheet

Project/County/PI Spout Springs Road Phase 2 Hall 15280

		A	B	C	D
	Administrative	**Parcels**	**Man hours per Parcel**		**TOTALS**
1	Pre-Acquisition	4	40		$8,000.00
2	Acquisition	4	100		$20,000.00
3	Relocation	0	50		$0.00
4	Administrative Appeals	1	50		$2,500.00
5	Post-Acquisition	1	100		$5,000.00
6					
7					
8					
9					
10					
11					
12					
13					
14					
15					
16					
17			**GRAND TOTAL INHOUSE**		$35,500.00

COMPARABLE SALES DATA (IMPROVED)

PROJECT. Spout Springs Road Phase 2 COUNTY Hall

SALE NO.	DATE	GRANTOR	GRANTEE	RECORDED BOOK	RECORDED PAGE	LOCATION	SALES PRICE	SIZE	PER UNIT VALUE	HIGHEST & BEST USE	REMARKS
1	12/2022	Nathan & Kelly Jordan	Justin Smith	9242	232	6338 Clearbrook Drive	$372,500	1,583 SF	$235/SF	Residential	Ranch w/ Finished Basement
2	03/2023	Benjamin & Larissa Hall	Junior Castro Landeros	9272	772	6444 Farm Ridge Court	$385,000	2,152 SF	$179/SF	Residential	2-Story Residence No Basement
3	12/2022	Keith Brian Cox	Michelle Goulding	9241	757	4949 Holland View Drive	$428,000	2,290 SF	$187/SF	Residential	2-Story Residence Unfinished Basement
4	03/2023	Waeden Gage	Sergey Danilchuk	9282	511	6396 Blackjack Road	$440,000	2,144 SF	$205/SF	Residential	Ranch w/ Finished Basement
5	05/2022	Joseph Williams & Bowtie Properties, Inc.	Joel & Ana Bell	9141	415	6756 Spout Springs Road	$380,000	1,512 SF	$251/SF	Residential	Ranch w/ Unfinished Basement on 4.12 Acres
6	03/2022	Tammy Sue Azevedo	Justin Glover	9093	342	5946 Blackjack Road	$432,000	1,890 SF	$228/SF	Residential	Ranch w/ Finished Basement on 3.03 Acres
7	09/2022	Lucus & Brittney Hobbs	Mickey & Angela Dutton	9204	314	6036 Blackjack Road	$445,000	1,384 SF	$321/SF	Residential	Ranch on 5.03 Acres
8	04/2023	Carol Marie Simmons	6224 Mount Salem Circle, LLC	9291	441	6224 Mount Salem Circle	$485,000	1,500 SF	$323/SF	Residential	Ranch on 5.41 Acres

Sales Verification and Source: Sales verified through Deed/Seller Affidavits and through Grantor/Grantee/Broker

Early Acquisition Environmental Evaluation

23 CFR 710.501 and 23 USC 108

Project

Project Name: Spout Springs Road from Union Circle to South of SR 347, Phase II

Date: May 30, 2023

P.I.: 0015280

Prepared by: Russ Danser, AICP

Firm: Edwards-Pitman Environmental, Inc.

INTRODUCTION

In accordance with 23 CFR 710.501 and 23 USC 108, the following parcels have been evaluated for eligibility for Early Acquisition Right-of-Way (ROW) for the widening of Spout Springs Road from Union Circle to south of SR 247 (Phase II) Project, PI No. 0015280. Portions of the following parcels in Hall County are to be acquired by Hall County as part of an early acquisition process for the proposed project (see attached Plan Sheets). Table 1 provides a list of the parcels to be acquired and Table 2 describes the environmental approvals associated with this project.

Table 1: Parcels to be Acquired

Parcel #	Owners Name(s)	Total Approximate Acreage of Parcel	Approximate Required ROW (Acres)	Approximate Required ROW (Square Feet)	Approximate Permanent Easement (Acres)	Approximate Permanent Easement (Square Feet)	Approximate Driveway Easement (Acres)	Approximate Driveway Easement (Square Feet)	Plan Sheet Page (# of 46)
1	Pamela Griffith	20.70	0.00	0.00	0.14	6,021.81	0.07	2,847.39	2, 6, 7
3A	ALDI, Inc.	0.84	0.00	0.00	0.11	4,755.93	0.00	0.00	2, 7, 8
3B	ALDI, Inc.	1.52	0.00	0.00	0.40	17,635.81	0.00	0.00	2, 7, 8
3C	ALDI, Inc.	2.14	0.00	0.00	0.06	2,455.28	0.00	0.00	2, 7, 8
25	Spout Springs Real Estate, LLC	1.52	0.04	1,912.54	0.18	7,872.34	0.02	861.24	2, 14, 16
43	Patricia E. and Carl M. Thompson	1.22	1.04	45,148.60	0.00	0.00	0.00	0.00	3, 21, 23
44	R. Paul and Veronica M. De Kozan	1.00	0.50	21,870.63	0.00	0.00	0.00	0.00	3, 21, 24
53	Robert Gawrys	0.46	0.02	1,018.86	0.00	0.00	0.03	1,146.41	3, 26, 28
54	Rolando and Donna Rocamora	0.46	0.02	776.85	0.00	0.00	0.02	877.67	3, 26, 28
55	Romiro B and Luz A. Covarrubias	0.46	0.02	741.46	0.00	0.00	0.03	1,184.07	3, 26, 29
62	Rakesh and Monika Mistry	4.23	0.30	13,220.34	0.00	0.00	0.05	2,280.41	3, 31, 32
64	Holy Trinity Anglican Church of Flowery	7.44	0.38	16,722.03	0.00	0.00	0.07	3,071.12	3, 31, 32

Parcel #	Owners Name	Total Approximate Acreage of Parcel	Approximate Required ROW (Acres)	Approximate Required ROW (Square Feet)	Approximate Permanent Easement (Acres)	Approximate Permanent Easement (Square Feet)	Approximate Driveway Easement (Acres)	Approximate Driveway Easement (Square Feet)	Plan Sheet Page (# of 46)
73	Richard Lynn and Sandra D. Hammer	2.21	0.86	37,513.86	0.00	0.00	0.00	0.00	4, 35, 36
74	Todd L. Green	0.92	0.29	12,646.28	0.00	0.00	0.06	2,431.01	4, 35, 36
75	Kenneth A. Sutter, Sr. and Kenneth Sutter, Jr.	0.92	0.26	11,449.82	0.00	0.00	0.04	1,714.78	4, 35, 36
77	Fortino and Hilda Leticia Gonzalez	0.92	0.24	10,531.58	<0.01	209.07	0.03	1,499.98	4, 35, 37
78	Nicholas and Rachel M Jendrasik	0.92	0.24	10,632.40	0.00	0.00	0.03	1,256.52	4, 35, 37
79	Martin Labaca	0.92	0.18	7,719.10	0.00	0.00	0.02	912.00	4, 35, 37
81	Giuseppe Scotto Di Carlo	10.70	0.12	5,106.00	0.00	0.00	0.09	4,020.43	4, 35, 37
82	Myles C. and Tracie L. Hansel	1.00	0.16	6,881.97	0.00	0.00	0.02	1,000.00	4, 35, 38
84	Charles R and Jessica W Wood	5.00	0.19	8,465.89	0.00	0.00	0.04	1,939.52	4, 35, 38
85	Gainesville and Hall County Dev Authority	307.05	5.14	224,029.92	1.76	76,729.28	0.00	0.00	4, 5, 35, 38, 39,
88	Hall County, Georgia	0.32	0.32	14,057.79	0.00	0.00	0.00	0.00	4, 41, 42
93	Darrell Clark, ET AL	1.46	0.00	0.00	0.00	0.00	0.04	1,925.00	4, 43, 44
94	Georgia Mechanical Properties	2.51	0.00	0.00	0.00	0.00	0.04	1,749.98	43, 44
96									
97	Keith Crane	1.60	0.00	0.00	0.00	0.00	0.17	7,349.33	43, 44
98									
99									
100									
101									
102									
103									
104	Royce and Janyce Cole	1.02	0.00	0.00	0.00	0.00	0.01	280.56	43, 45
105									
106	Michael K. Cole	1.40	0.00	0.00	0.00	0.00	0.01	470.32	43, 45, 46
108	Duncan Corners Thompson Mill Property POA, Inc.	1.89	0.00	0.00	0.00	0.00	0.02	727.41	2, 8, 9

ENVIRONMENTAL SURVEY RESULTS

Acquisition of portions of the parcels would allow for the future preservation of land needed to accommodate the construction of improvements for the widening of Spout Springs Road from Union Circle to south of SR 247 (Phase II) within the project limits if the Build Alternative is selected. This action is only for the early acquisition of ROW and/or easement and is not evaluating the impacts associated with the construction of proposed improvements. Those impacts are to be part of the action evaluated for the widening of Spout Springs Road from Union Circle to south of SR 247 (Phase II) in the Environmental Reevaluation of the approved Finding on No Significant Impact (FONSI).

Table 2: Environmental Survey Results.

<table>
<tr><th>Discipline</th><th>Agency Approved Documents and Dates of Approval</th><th>Verification of Coverage</th><th>Subject Matter Expert</th></tr>
<tr><td>Ecology</td><td>• Protected Aquatic Species Survey Report, March 2012 (PI 0009679)
• Ecology Resource Survey Report, June 2012 (PI 0009679)
• Practical Alternatives Report, October 2013 (PI 0009769)
• Protected Species Survey Report for Georgia Aster, May 2014 (PI 0009679)
• Ecology Assessment of Effects Report, May 2014 (PI 0009769)
• Addendum I, April 2015 (PI 0009679)
• Memorandum I to Addendum I, December 2016 (to split PI Nos. 0009679 & PI 0015280)</td><td>May 2023</td><td>Collin Lane, Edwards-Pitman Environmental, Inc.</td></tr>
<tr><td colspan="4">The following parcels have portions of water of the US and/or buffers within the parcel limit:
Parcel 43 on Sheets 3 and 21,
Parcel 73 on Sheets 4 and 35, and
Parcel 85 on Sheets 4, 5, 35, and 39.
No construction will occur as part of the proposed early acquisition of ROW for this parcel.

In addition, any parcels with trees contain potential tricolored bat habitat. This species is anticipated for Endangered Species Act (ESA) listing in September 2023 and would require Section 7 consultation with US Fish and Wildlife Service (USFWS) as part of the addenda and reevaluation process prior to construction activities on the parcels. However, through coordination with the Office of Environmental Services, it has been determined that early acquisition can proceed on these parcels since the acquisition would not include any clearing activities on acquired parcels and the consultation is not anticipated to result in alteration of the project's alignment.</td></tr>
<tr><td>History</td><td>• Historic Resources Survey Report, April 2012 (PI 0009679)
• Finding of No Historic Properties Affected, April 2014 (PI 0009769)
• Reevaluation December 2016 (to split PI Nos. 0009679 & 0015280)</td><td>May 2023</td><td>Meg Pagan, Edwards-Pitman Environmental, Inc.</td></tr>
<tr><td colspan="4">There are no National Register of Historic Places (NRHP) eligible properties to be acquired for early acquisition. While the proposed ROW areas have been surveyed, due to documentation age, addenda will be required as part of the reevaluation process. However, the parcels listed in this document do not contain structures that are 50 or more years of age and would not require evaluation as part of this addenda effort.</td></tr>
<tr><td>Archaeology</td><td>• Phase I report, December 2013 (PI 0009679)
• Addendum, April 2014 (PI 0009679)
• Second Addendum, November 2016 (to split PI Nos. 0009679 & 0015280)</td><td>January 2023</td><td>Emily Jones, Edwards-Pitman Environmental, Inc.</td></tr>
</table>

There are no archaeological sites in the areas to be acquired for early acquisition. Because the proposed ROW areas have been surveyed, there is no potential for findings to change. The overall project will require additional field survey to address specific parcels where there is insufficient coverage; however, the parcels that are proposed for early acquisition have sufficient coverage and should not require additional field survey. In addition, there will be no ground disturbing activity associated with this early acquisition process or prior to the project's full environmental clearance through the environmental reevaluation and addenda process.			
Air	• Air Assessment, June 2013 (PI 0009679) • Addendum, March 2014 (PI 0009679) • Addendum II, July 2015 (PI 0009679) • Addendum III, November 2016 (to split PI Nos. 0009679 & 0015280)		N/A
As part of the reevaluation effort, this project is currently being evaluated for its consistency with state and federal air quality goals, including CO, ozone, $PM_{2.5}$, and MSATs as part of the addendum effort. Previous results indicated that the project is consistent with the SIP for the attainment of clean air quality in Georgia and is in compliance with both state and federal air quality standards.			
Noise	• Noise screening assessment, July 2013 (PI 0009679) • Addendum I, April 2014 (PI 0009679) • Addendum II, June 2015 (PI 0009679) • Addendum III November 2016 to split PI 0009679 & PI 0015280		N/A
The proposed early property acquisition is considered a Type I project for noise assessments. A Type I project requires the preparation of a noise study and abatement of highway noise impacts. While this noise study was previously completed with subsequent addenda, an additional addendum may be required to address changes in projected traffic volumes. If such an addendum is required, it will be completed as part of the environmental reevaluation effort to determine the impacts approaching and/or exceeding the Noise Abatement Criteria, the decibel increase in traffic generated noise, and any feasible noise abatement measures. This effort will be completed prior to environmental certification for Let and, if abatement measures are determined feasible, would be included in the construction activities.			

CONCLUSION

The Environmental Assessment (EA) and Finding of No Significant Impact (FONSI) are not anticipated to be approved until spring of 2022. Should the Build Alternative be selected, ROW would be needed from these parcels in order to accommodate the construction of the proposed improvements. Early acquisition would allow Hall County an opportunity to purchase ROW at 2023 land values and potentially avoid inflation costs. The acquisition of land or easements from these parcels would not influence the environmental review of the transportation project, including decisions on need to construct the transportation project or selection of an alternative.

Attachment: Plan Sheets

PLAN SHEETS

HALL COUNTY DEPARTMENT OF PUBLIC WORKS

RIGHT OF WAY OF PROPOSED

WIDENING AND RECONSTRUCTION SPOUT SPRINGS RD (CR 1287) BETWEEN THOMPSONS MILL RD AND UNION CIR.

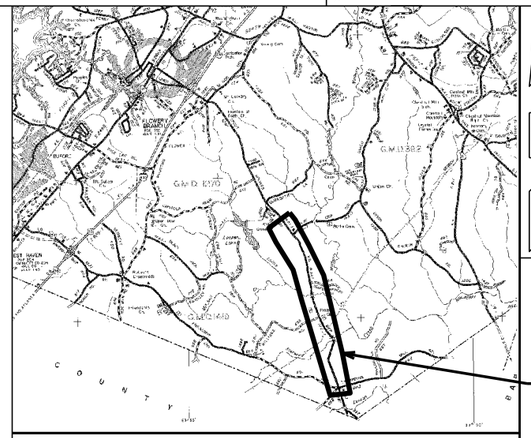

LOCATION SKETCH

DESIGN DATA:
TRAFFIC A.D.T.: 20,600 (2020)
TRAFFIC A.D.T.: 34,350 (2040)
TRAFFIC D.H.V.: 3320 (2040)
DIRECTIONAL DIST: 63/37
% TRUCKS: 8.5 %
24 HR. TRUCKS %: 10%
SPEED DESIGN: 45 MPH

FEDERAL ROUTE * N/A
STATE ROUTE * N/A
P.I. NO. 0015280

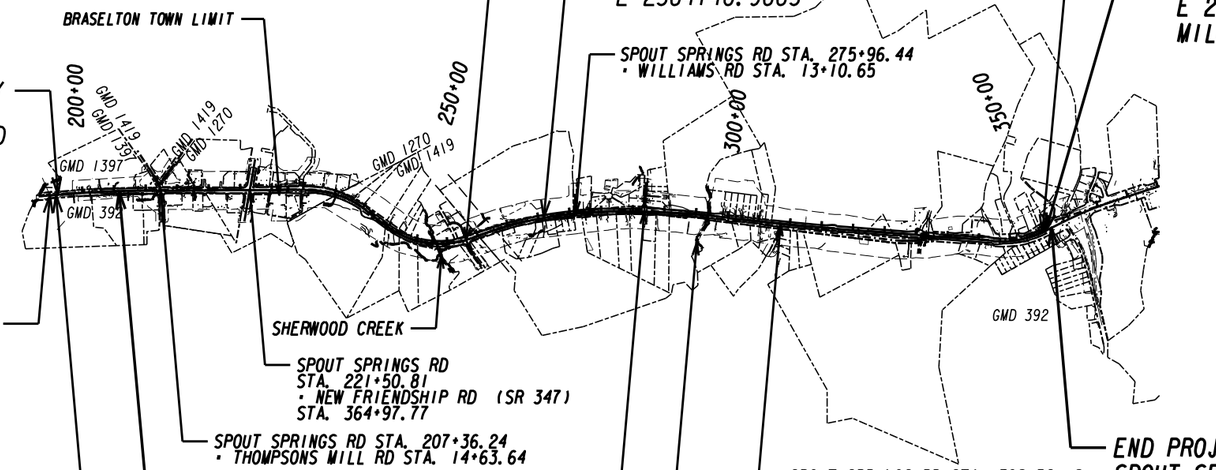

BEGIN RIGHT OF WAY
ACQUISITION
SPOUT SPRINGS ROAD
STA. 191+10.00

BEGIN PROJECT
SPOUT SPRINGS RD
STA. 189+79.84
N 1492015.3546
E 2386097.4760

BEGIN CONSTRUCTION
SPOUT SPRINGS RD
STA. 190+79.84
N 1492108.1663
E 2386060.2472
MILE POST NO. 0.18

SPOUT SPRINGS ROAD

SPOUT SPRINGS RD STA. 207+36.24
* THOMPSONS MILL RD STA. 14+63.64

SPOUT SPRINGS RD STA. 221+50.81
* NEW FRIENDSHIP RD (SR 347)
STA. 364+97.77

SPOUT SPRINGS RD STA. 258+04.82
* SHERWOOD MILL DR/
DOVE POINT LN STA. 14+45.72

PROJECT MIDPOINT
SPOUT SPRINGS RD
STA. 270+85.42
N 1499604.1070
E 2384146.9883

SPOUT SPRINGS RD STA. 275+96.44
* WILLIAMS RD STA. 13+10.65

SPOUT SPRINGS RD STA. 286+83.91
* LITANY CT STA. 14+68.49

SPOUT SPRINGS RD STA. 308+52.18
* DEATON HENRY RD STA. 10+00.00

END RIGHT OF WAY
ACQUISITION
SPOUT SPRINGS ROAD
STA. 350+31.31

END CONSTRUCTION
STA. 350+91.09
N 1507269.3930
E 2382017.6873
MILE POST NO. 3.20

END PROJECT
SPOUT SPRINGS RD
STA. 351+91.00
N 1507341.6265
E 2381948.6636

CONVENTIONAL SIGNS

- STATE OR COUNTY LINE
- CITY LIMIT LINE
- LAND LOT LINE
- PROPERTY LINE
- SURVEY OR BASE LINE
- RIGHT OF WAY LINE
  - EXISTING
  - REQUIRED
  - LIMIT OF ACCESS
  - REQD R/W & LIMIT OF ACCESS
  - R/W MARKERS
- FENCE
- RAILROAD
- POWER LINE
- TELEPHONE LINE
- POWER POLES
- TELEPHONE OR TELEGRAPH POLES

THIS PROJECT HAS BEEN PREPARED USING THE HORIZONTAL GEORGIA COORDINATE SYSTEM OF 1984 (NAD 1983)/94 WEST ZONE, AND THE NORTH AMERICAN VERTICAL DATUM (NAVD) OF 1988.

NOTE :
ALL REFERENCES IN THIS DOCUMENT, WHICH INCLUDES ALL PAPERS, WRITINGS, DOCUMENTS, DRAWINGS, OR PHOTOGRAPHS USED, OR TO BE USED IN CONNECTION WITH THIS DOCUMENT, TO "STATE HIGHWAY DEPARTMENT OF GEORGIA", "STATE HIGHWAY DEPARTMENT", "GEORGIA STATE HIGHWAY DEPARTMENT", "HIGHWAY DEPARTMENT", OR "DEPARTMENT" WHEN THE CONTEXT THEREOF MEANS THE STATE HIGHWAY DEPARTMENT OF GEORGIA, AND SHALL BE DEEMED TO MEAN THE DEPARTMENT OF TRANSPORTATION.

PLANS PREPARED BY
STV INCORPORATED

SCALE IN FEET
0 1200 2400 4800

LENGTH OF RIGHT OF WAY PROJECT	COUNTY NO. 139
	MILES
NET LENGTH OF RIGHT OF WAY	3.02
NET LENGTH OF BRIDGES	0
NET LENGTH OF EXCEPTIONS	0
GROSS LENGTH OF RIGHT OF WAY	3.02

THIS PROJECT IS LOCATED 100% IN HALL COUNTY AND CONGRESSIONAL DISTRICT 9.

PLANS COMPLETED DATE: SEPTEMBER 28, 2022

REVISIONS:

HALL COUNTY

THE DATA, TOGETHER WITH ALL OTHER INFORMATION SHOWN ON THESE PLANS OR IN ANYWAY INDICATED THEREBY, WHETHER BY DRAWINGS OR NOTES, OR IN ANY OTHER MANNER, ARE BASED UPON FIELD INVESTIGATIONS AND ARE BELIEVED TO BE INDICATIVE OF ACTUAL CONDITIONS. HOWEVER, THE SAME ARE SHOWN AS INFORMATION ONLY, ARE NOT GUARANTEED, AND DO NOT BIND THE DEPARTMENT OF TRANSPORTATION IN ANY WAY. THE ATTENTION OF BIDDER IS SPECIFICALLY DIRECTED TO SUBSECTIONS 102.04, 102.05, AND 104.03 OF THE SPECIFICATIONS.

STV 100 Years
3700 CRESTWOOD PARKWAY NW, SUITE 800
DULUTH, GEORGIA 30096
PHONE: 678-453-0797 FAX: 678-966-9171

5/24/2023	GPLOT-V8	0015280_60-002.dgn	SHEET NO.	TOTAL SHEETS
GoCC	gplotborder-V81-P0.tbl	GAWPLN	2	46

THOMPSONS MILL ROAD

Curve* 1	Curve* 2
PI Sta= 14+12.86	PI Sta= 18+56.81
N= 1493664.3580	N= 1493815.1760
E= 2385449.9750	E= 2385878.8700
DELTA= 31°28'47.8" (RT)	DELTA= 3°03'34.0" (RT)
D= 7°38'21.97"	D= 1°38'13.28"
T= 211.38	T= 93.47
L= 412.07	L= 186.89
R= 750.00	R= 3500.00
E= 29.22	E= 1.25
e= N/A	e= N/A

FRIENDSHIP ROAD

Curve* 1	Curve* 2
PI Sta= 12+49.94	PI Sta= 13+82.00
N= 1493677.5710	N= 1493639.6810
E= 2385273.3100	E= 2385399.8110
DELTA= 1°38'33.6" (LT)	DELTA= 34°12'07.8" (RT)
D= 5°43'46.48"	D= 57°17'44.81"
T= 14.34	T= 30.77
L= 28.67	L= 59.69
R= 1000.00	R= 100.00
E= 0.10	E= 4.63
e= N/A	e= N/A

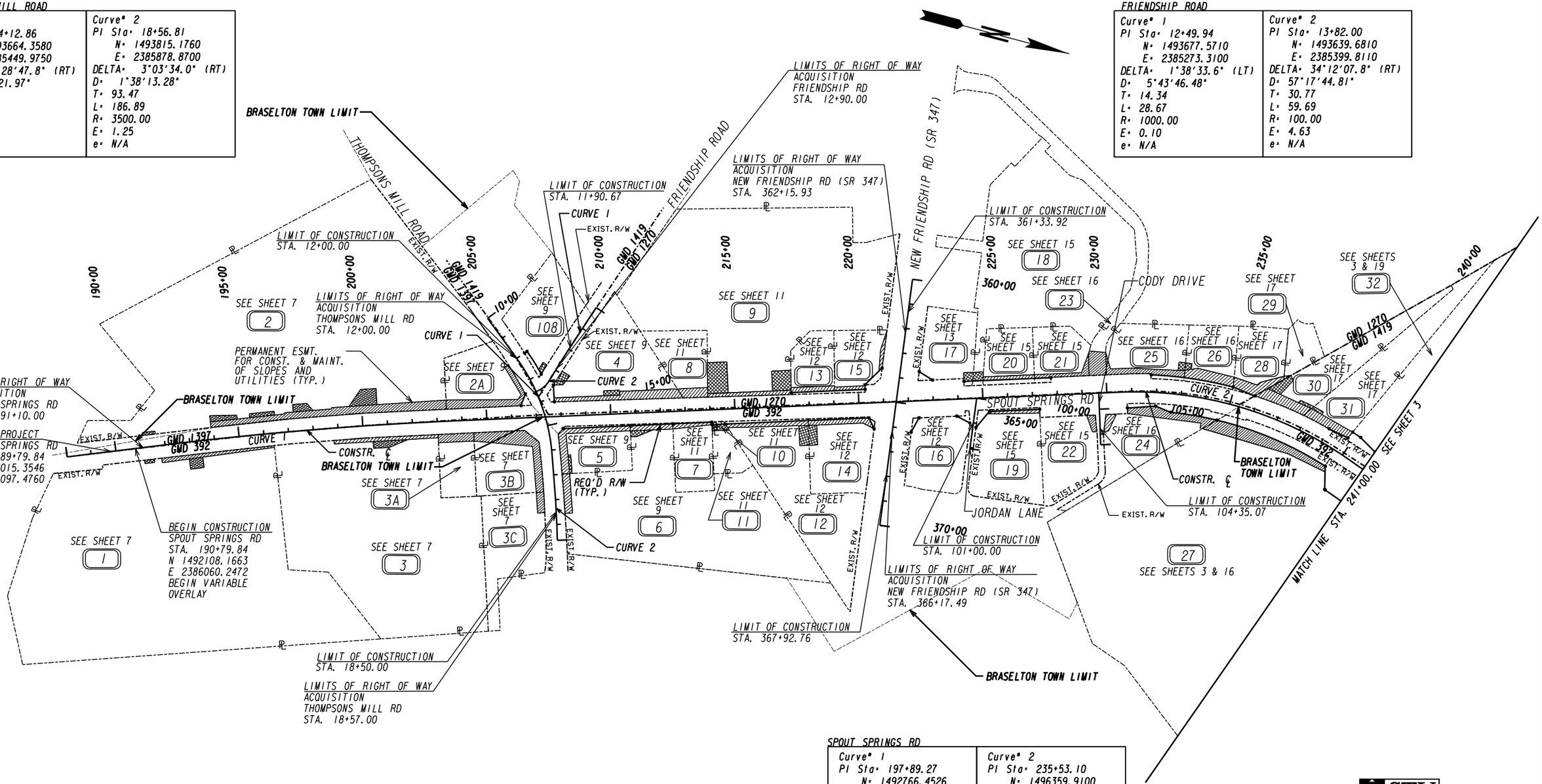

SPOUT SPRINGS RD

Curve* 1	Curve* 2
PI Sta= 197+89.27	PI Sta= 235+53.10
N= 1492766.4526	N= 1496359.9100
E= 2385796.1942	E= 2384674.5400
DELTA= 04°31'18.0" (RT)	DELTA= 37°14'48.5" (RT)
D= 00°22'55.10"	D= 03°49'10.99"
T= 592.19	T= 505.49
L= 1183.77	L= 975.12
R= 15000.00	R= 1500.00
E= 11.69	E= 82.88
e= N/A	e= 3.40%

STV 100 Years
3700 CRESTWOOD PARKWAY NW, SUITE 800
DULUTH, GEORGIA 30096
PHONE: (770)452-0797 FAX: (770)936-9171

SCALE IN FEET
0 200 400 800

PROPERTY AND EXISTING R/W LINE
REQUIRED R/W LINE
CONSTRUCTION LIMITS
EASEMENT FOR CONSTR & MAINTENANCE OF SLOPES AND UTILITIES
EASEMENT FOR CONSTR OF SLOPES
EASEMENT FOR CONSTR OF DRIVES

BEGIN LIMIT OF ACCESS.....BLA
END LIMIT OF ACCESS.....ELA
LIMIT OF ACCESS
REQ'D R/W & LIMIT OF ACCESS
ORANGE BARRIER FENCE
ESA - ENV. SENSITIVE AREA
(SEE ERIT TABLE)

DATE	REVISIONS	DATE	REVISIONS

HALL COUNTY
DEPARTMENT OF PUBLIC WORKS

RIGHT OF WAY MAP

PROJECT NO: 0015280
COUNTY: HALL
LAND LOT NO: N/A
LAND DISTRICT: N/A
GMD: 1397 / 392 / 1270 / 1419
DATE 9/28/22 SH 2 OF 46

5/24/2023 GoCC	GPLOT-V8 gplotborder-V81-P0.tbl	0015280_60-003.dgn GRWPLN	SHEET NO. 3	TOTAL SHEETS 46

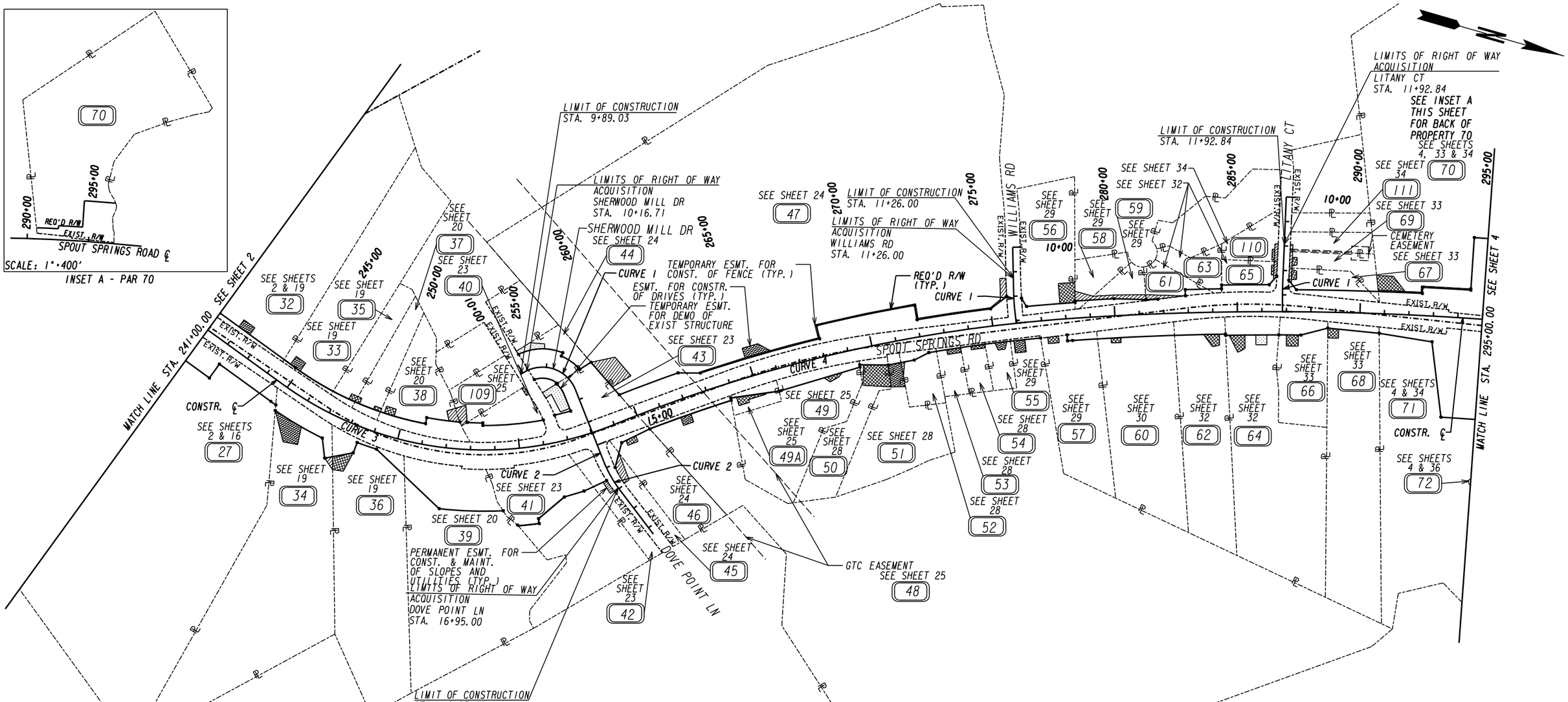

SPOUT SPRINGS RD

Curve* 3	Curve* 4
PI Sta= 252+58.44	PI Sta= 268+69.40 (1) PI Sta= 288+06.87 (2)
N= 1497997.0139	N= 1499368.4233 (1) N= 1501205.0160 (2)
E= 2385267.5410	E= 2384184.6992 (1) E= 2383517.5559 (2)
DELTA= 58°12'20.6" (LT)	DELTA= 27°43'28.4" (RT)
D= 04°05'33.20"	D= 00°57'17.75"(1) D= 00°28'38.87"(2)
T= 779.32	T= 1653.62(1) T= 2306.90(2)
L= 1422.23	L= 1919.56(1) L= 1967.50(2)
R= 1400.00	R= 6000.00(1) R= 12000.00(2)
E= 202.29	E= 223.70
e= 3.40%	e= N/A

SHERWOOD MILL DR/DOVE POINT LN

Curve* 1	Curve* 2
PI Sta= 11+77.15	PI Sta= 16+39.17
N= 1498308.6300	N= 1498648.9340
E= 2384553.1880	E= 2384995.0270
DELTA=101°02'23.9" (RT)	DELTA= 15°40'26.1" (LT)
D= 39°47'19.45"	D= 11°27'32.96"
T= 174.81	T= 68.82
L= 253.94	L= 136.78
R= 144.00	R= 500.00
E= 82.48	E= 4.71
e= 4.00%	e= N/A

WILLAMS ROAD

Curve* 1
PI Sta= 12+17.88
N= 1500033.8780
E= 2383848.7730
DELTA= 04°51'25.2" (LT)
D= 07°38'21.97"
T= 31.81
L= 63.58
R= 750.00
E= 0.67
e= N/A

LITANY CT

Curve* 1
PI Sta= 13+62.64
N= 1501070.4310
E= 2383487.1060
DELTA= 02°14'21.0" (LT)
D= 02°51'53.24"
T= 39.09
L= 78.16
R= 2000.00
E= 0.38
e= N/A

STV 100 Years
3700 CRESTWOOD PARKWAY NW, SUITE 800
DULUTH, GEORGIA 30096
PHONE: (770)452-0797 FAX: (770)936-9171

SCALE IN FEET
0 200 400 800

PROPERTY AND EXISTING R/W LINE
REQUIRED R/W LINE
CONSTRUCTION LIMITS
EASEMENT FOR CONSTR & MAINTENANCE OF SLOPES AND UTILITIES
EASEMENT FOR CONSTR OF SLOPES
EASEMENT FOR CONSTR OF DRIVES

BEGIN LIMIT OF ACCESS.....BLA
END LIMIT OF ACCESS.....ELA
LIMIT OF ACCESS
REQ'D R/W & LIMIT OF ACCESS
ORANGE BARRIER FENCE
ESA - ENV. SENSITIVE AREA (SEE ERIT TABLE)

DATE	REVISIONS	DATE	REVISIONS

HALL COUNTY
DEPARTMENT OF PUBLIC WORKS

RIGHT OF WAY MAP

PROJECT NO: 0015280
COUNTY: HALL
LAND LOT NO: N/A
LAND DISTRICT: N/A
GMD: 1419 / 392
DATE 9/28/22 SH 3 OF 46

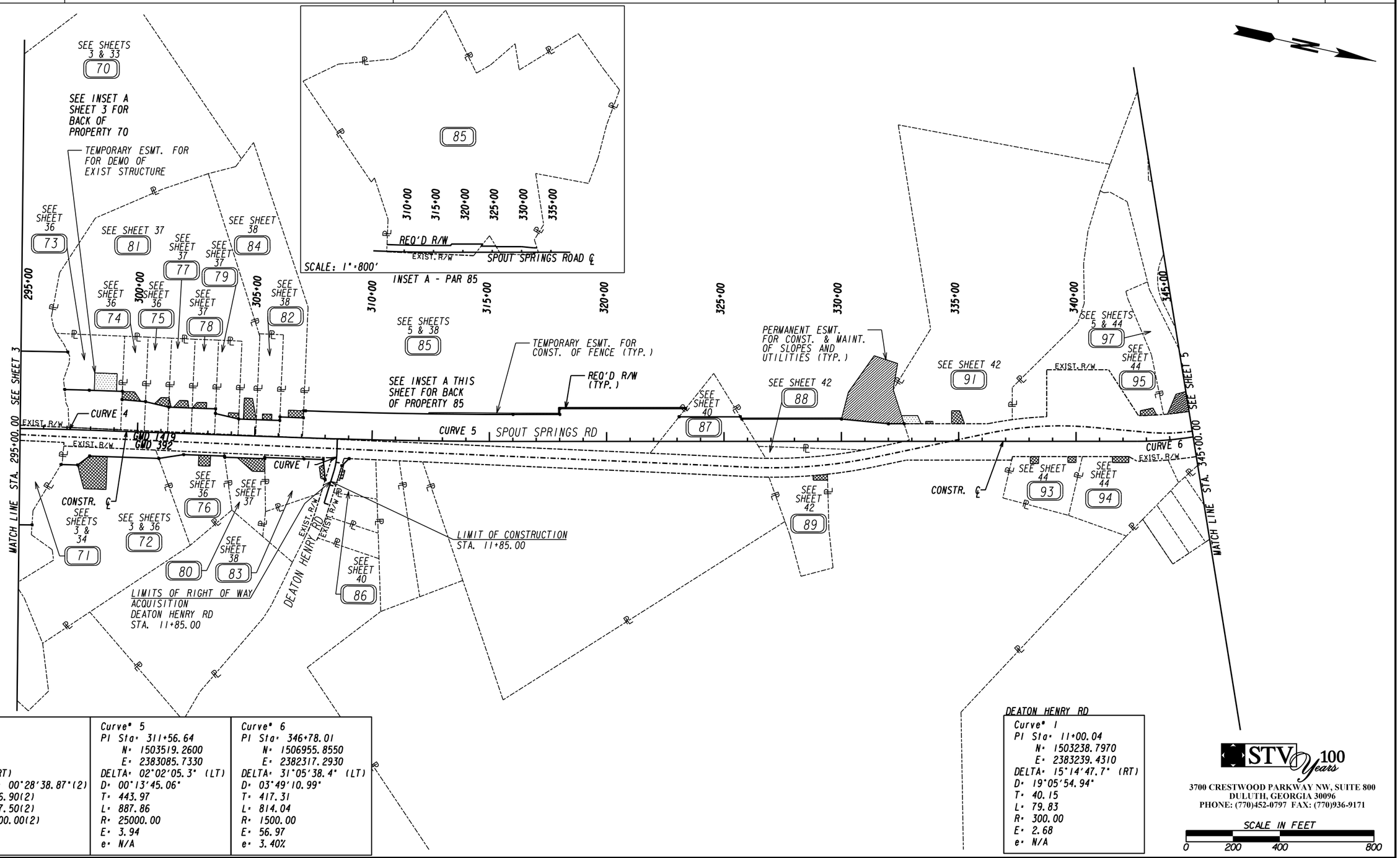

SPOUT SPRINGS RD

Curve 4	Curve 5	Curve 6
PI Sta: 275+54.97	PI Sta: 311+56.64	PI Sta: 346+78.01
N: 1499906.49	N: 1503519.2600	N: 1506955.8550
E: 2383759.85	E: 2383085.7330	E: 2382317.2930
DELTA: 27°43'28.4" (RT)	DELTA: 02°02'05.3" (LT)	DELTA: 31°05'38.4" (LT)
D: 00°57'17.75"(1) D: 00°28'38.87"(2)	D: 00°13'45.06"	D: 03°49'10.99"
T: 1653.62(1) T: 2306.90(2)	T: 443.97	T: 417.31
L: 1919.56(1) L: 1967.50(2)	L: 887.86	L: 814.04
R: 6000.00(1) R: 12000.00(2)	R: 25000.00	R: 1500.00
E: 223.70	E: 3.94	E: 56.97
e: N/A	e: N/A	e: 3.40%

DEATON HENRY RD

Curve 1
PI Sta: 11+00.04
N: 1503238.7970
E: 2383239.4310
DELTA: 15°14'47.7" (RT)
D: 19°05'54.94"
T: 40.15
L: 79.83
R: 300.00
E: 2.68
e: N/A

STV 100 Years
3700 CRESTWOOD PARKWAY NW, SUITE 800
DULUTH, GEORGIA 30096
PHONE: (770)452-0797 FAX: (770)936-9171

SCALE IN FEET
0 200 400 800

PROPERTY AND EXISTING R/W LINE
REQUIRED R/W LINE
CONSTRUCTION LIMITS
EASEMENT FOR CONSTR & MAINTENANCE OF SLOPES AND UTILITIES
EASEMENT FOR CONSTR OF SLOPES
EASEMENT FOR CONSTR OF DRIVES

BEGIN LIMIT OF ACCESS.....BLA
END LIMIT OF ACCESS.....ELA
LIMIT OF ACCESS
REQ'D R/W & LIMIT OF ACCESS
ORANGE BARRIER FENCE
ESA - ENV. SENSITIVE AREA
(SEE ERIT TABLE)

DATE	REVISIONS	DATE	REVISIONS

HALL COUNTY
DEPARTMENT OF PUBLIC WORKS

RIGHT OF WAY MAP

PROJECT NO: 0015280
COUNTY: HALL
LAND LOT NO: N/A
LAND DISTRICT: N/A
GMD: 1419 / 392
DATE 9/28/22 SH 4 OF 46

5/24/2023	GPLOT-V8	0015280_60-005.dgn	SHEET NO.	TOTAL SHEETS
GoCC	gplotborder-V81-P0.tbl	GAWPLN	5	46

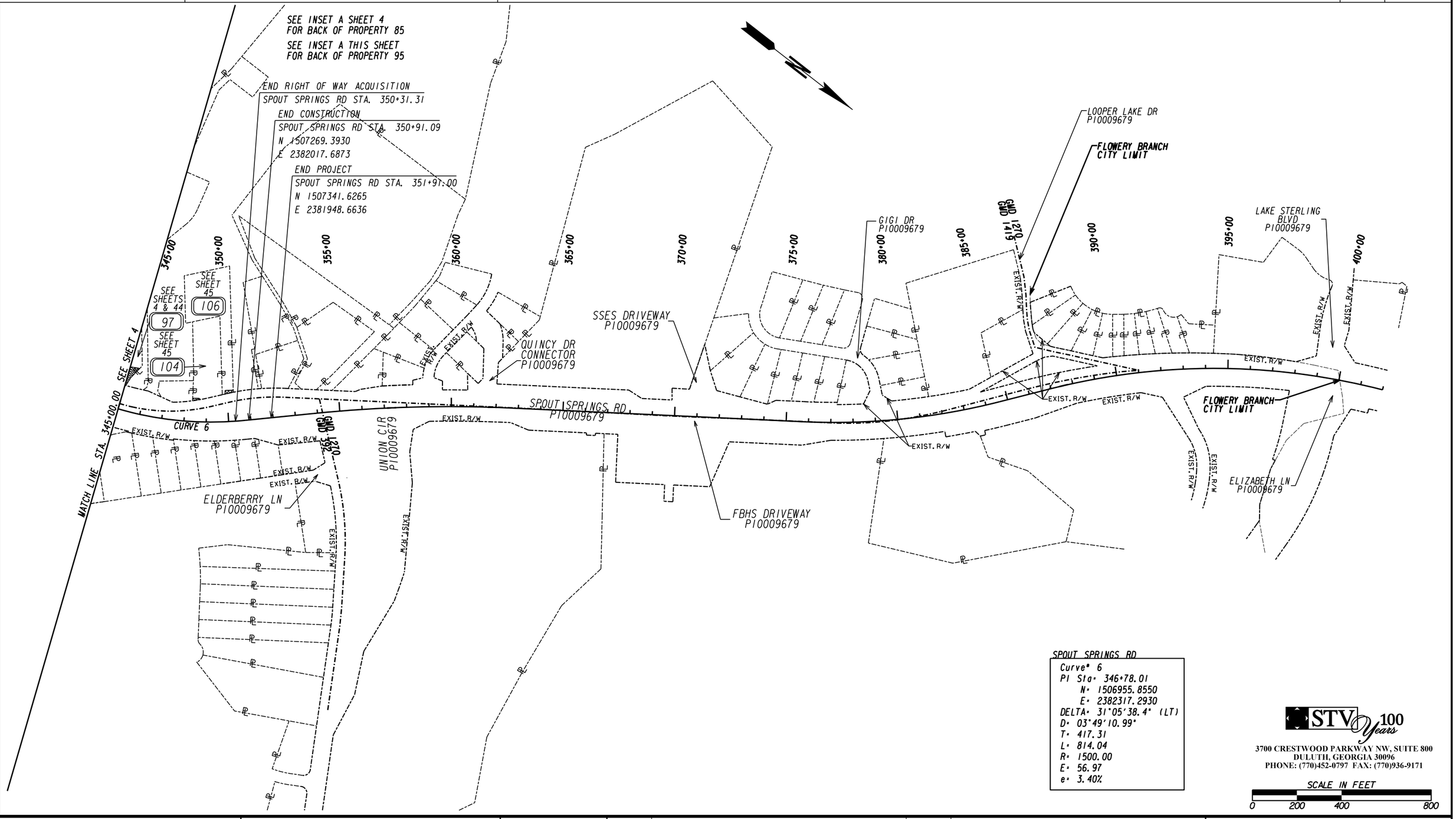

SPOUT SPRINGS RD
Curve# 6
PI Sta: 346+78.01
N: 1506955.8550
E: 2382317.2930
DELTA: 31°05'38.4" (LT)
D: 03°49'10.99"
T: 417.31
L: 814.04
R: 1500.00
E: 56.97
e: 3.40%

STV 100 Years
3700 CRESTWOOD PARKWAY NW, SUITE 800
DULUTH, GEORGIA 30096
PHONE: (770)452-0797 FAX: (770)936-9171

SCALE IN FEET
0 200 400 800

PROPERTY AND EXISTING R/W LINE
REQUIRED R/W LINE
CONSTRUCTION LIMITS
EASEMENT FOR CONSTR & MAINTENANCE & MAINTENANCE OF SLOPES
EASEMENT FOR CONSTR OF SLOPES
EASEMENT FOR CONSTR OF DRIVES

BEGIN LIMIT OF ACCESS.....BLA
END LIMIT OF ACCESS.....ELA
LIMIT OF ACCESS
REQ'D R/W & LIMIT OF ACCESS
ORANGE BARRIER FENCE
ESA - ENV. SENSITIVE AREA
(SEE ERIT TABLE)

DATE	REVISIONS	DATE	REVISIONS

HALL COUNTY
DEPARTMENT OF PUBLIC WORKS

RIGHT OF WAY MAP

PROJECT NO: 0015280
COUNTY: HALL
LAND LOT NO: N/A
LAND DISTRICT: N/A
GMD: 1419 / 392 / 1270
DATE 9/28/22 SH 5 OF 46

5/24/2023	GPLOT-V8	0015280_60-006.dgn	SHEET NO.	TOTAL SHEETS
GoCC	gplotborder-V81-P0.tbl	GAWPLN	6	46

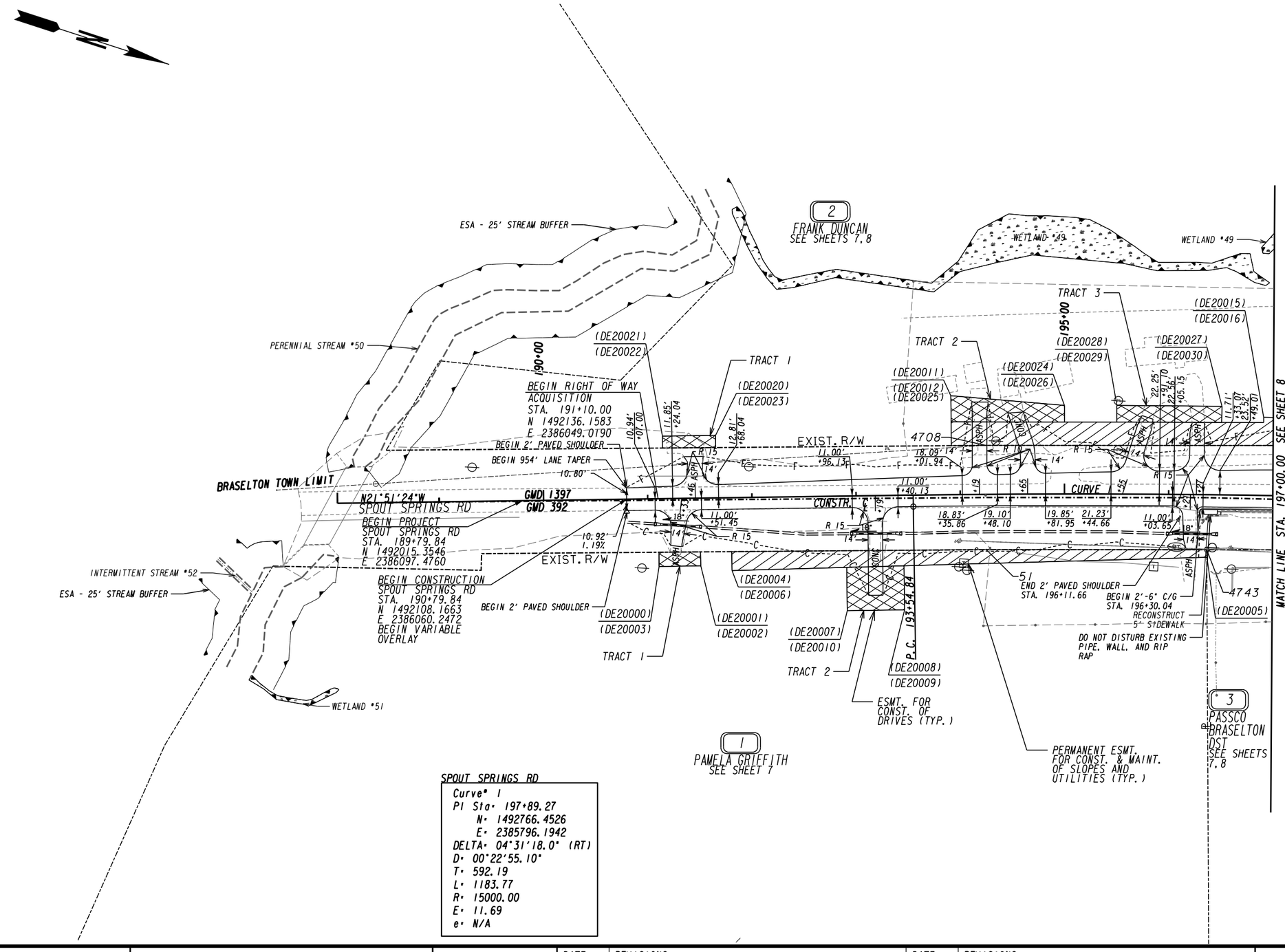

SPOUT SPRINGS RD

Curve* 1
PI Sta* 197+89.27
N* 1492766.4526
E* 2385796.1942
DELTA* 04°31'18.0" (RT)
D* 00°22'55.10"
T* 592.19
L* 1183.77
R* 15000.00
E* 11.69
e* N/A

STV 100 Years
3700 CRESTWOOD PARKWAY NW, SUITE 800
DULUTH, GEORGIA 30096
PHONE: (770)452-0797 FAX: (770)936-9171

SCALE IN FEET
0 50 100 200

PROPERTY AND EXISTING R/W LINE
REQUIRED R/W LINE
CONSTRUCTION LIMITS
EASEMENT FOR CONSTR & MAINTENANCE OF SLOPES AND UTILITIES
EASEMENT FOR CONSTR OF SLOPES
EASEMENT FOR CONSTR OF DRIVES

BEGIN LIMIT OF ACCESS.....BLA
END LIMIT OF ACCESS.....ELA
LIMIT OF ACCESS
REQ'D R/W & LIMIT OF ACCESS
ORANGE BARRIER FENCE
ESA - ENV. SENSITIVE AREA
(SEE ERIT TABLE)

HALL COUNTY GEORGIA CONSTITUTIONAL 1818

DATE	REVISIONS	DATE	REVISIONS

HALL COUNTY
DEPARTMENT OF PUBLIC WORKS

RIGHT OF WAY PLANS

PROJECT NO: 0015280
COUNTY: HALL
LAND LOT NO: N/A
LAND DISTRICT: N/A
GMD: 1397 / 392
DATE 9/28/22 SH 6 OF 46

1 PAMELA GRIFFITH
SEE SHEET 6

PESWT - PAR 1/SV367 EASM'T. FOR CONST. AND MAINT. OF SLOPES AND UTILITIES DE20000

PNT	OFFSET/ DIST	STATION/ BEARING	ALIGNMENT
DE20004	51.77 R	191+80.00	C/L Spout Springs Road
	244.20	N 21°30'19.6" W	
51	53.05 R	194+24.54	C/L Spout Springs Road
	211.63	N 21°00'58.4" W	
4743	52.77 R	196+37.20	C/L Spout Springs Road
	7.23	N 68°41'53.9" E	
DE20005	60.00 R	196+37.31	C/L Spout Springs Road
	455.78	S 22°39'37.7" E	
DE20006	70.00 R	191+80.00	C/L Spout Springs Road
	18.23	S 68°08'35.5" W	
DE20004	51.77 R	191+80.00	C/L Spout Springs Road

REQD EASMT = 6021.81 SF
REQD EASMT = 0.138 ACRES
REMAINDER = +/- 21 ACRES

DWESMT - PAR 1/SV367 - TRACT 1 REQ'D DRWY. EASM'T. DE20589

PNT	OFFSET/	STATION/	ALIGNMENT
DE20000	51.34 R	191+10.00	C/L Spout Springs Road
DE20001	51.59 R	191+50.00	C/L Spout Springs Road
DE20002	65.00 R	191+50.00	C/L Spout Springs Road
DE20003	65.00 R	191+10.00	C/L Spout Springs Road
DE20000	51.34 R	191+10.00	C/L Spout Springs Road

DWESMT - PAR 1/SV367 - TRACT 2 REQ'D DRWY. EASM'T. DE20590

PNT	OFFSET/	STATION/	ALIGNMENT
DE20007	68.46 R	192+90.00	C/L Spout Springs Road
DE20008	67.69 R	193+45.00	C/L Spout Springs Road
DE20009	110.00 R	193+45.00	C/L Spout Springs Road
DE20010	110.00 R	192+90.00	C/L Spout Springs Road
DE20007	68.46 R	192+90.00	C/L Spout Springs Road

2 FRANK DUNCAN
SEE SHEETS 6, 8

PESWT - PAR 2/SV348 EASM'T. FOR CONST. AND MAINT. OF SLOPES AND UTILITIES DE20001

PNT	OFFSET/ DIST	STATION/ BEARING	ALIGNMENT
4690	48.00 L	203+39.89	C/L Spout Springs Road
	333.71	S 17°36'37.7" E	
4698	48.52 L	200+07.12	C/L Spout Springs Road
	302.16	S 19°18'03.6" E	
4709	48.22 L	197+06.28	C/L Spout Springs Road
	282.55	S 21°00'58.4" E	
4708	46.95 L	194+24.94	C/L Spout Springs Road
	33.08	S 21°30'19.6" E	
DE20011	46.99 L	193+92.00	C/L Spout Springs Road
	23.01	S 68°20'12.4" W	
DE20012	70.00 L	193+92.00	C/L Spout Springs Road
	299.89	N 20°53'13.6" W	
DE20015	70.00 L	196+90.00	C/L Spout Springs Road
	5.00	S 69°53'20.4" W	
DE20016	75.00 L	196+90.00	C/L Spout Springs Road
	191.29	N 19°36'58.3" W	
DE20017	75.00 L	198+80.00	C/L Spout Springs Road
	5.00	S 70°52'43.1" W	
DE20018	80.00 L	198+80.00	C/L Spout Springs Road
	462.34	N 18°37'19.6" W	
DE20019	85.00 L	203+39.78	C/L Spout Springs Road
	37.00	N 72°30'03.8" E	
4690	48.00 L	203+39.89	C/L Spout Springs Road

REQD EASMT = 27336.14 SF
REQD EASMT = 0.628 ACRES
REMAINDER = +/- 22 ACRES

DWESMT - PAR 2/SV348 - TRACT 1 REQ'D DRWY. EASM'T. DE20002

PNT	OFFSET/	STATION/	ALIGNMENT
DE20020	48.31 L	191+66.00	C/L Spout Springs Road
DE20021	48.63 L	191+15.00	C/L Spout Springs Road
DE20022	60.00 L	191+15.00	C/L Spout Springs Road
DE20023	60.00 L	191+66.00	C/L Spout Springs Road
DE20020	48.31 L	191+66.00	C/L Spout Springs Road

DWESMT - PAR 2/SV348 - TRACT 2 REQ'D DRWY. EASM'T. DE20003

PNT	OFFSET/	STATION/	ALIGNMENT
DE20024	69.06 L	195+00.00	C/L Spout Springs Road
DE20012	70.00 L	193+92.00	C/L Spout Springs Road
DE20025	95.00 L	193+92.00	C/L Spout Springs Road
DE20026	85.00 L	195+00.00	C/L Spout Springs Road
DE20024	69.06 L	195+00.00	C/L Spout Springs Road

DWESMT - PAR 2/SV348 - TRACT 3 REQ'D DRWY. EASM'T. DE20004

PNT	OFFSET/	STATION/	ALIGNMENT
DE20027	69.53 L	196+50.00	C/L Spout Springs Road
DE20028	68.99 L	195+50.00	C/L Spout Springs Road
DE20029	85.00 L	195+50.00	C/L Spout Springs Road
DE20030	85.00 L	196+50.00	C/L Spout Springs Road
DE20027	69.53 L	196+50.00	C/L Spout Springs Road

DWESMT - PAR 2/SV348 - TRACT 4 REQ'D DRWY. EASM'T. DE20005

PNT	OFFSET/	STATION/	ALIGNMENT
DE20031	74.61 L	198+05.00	C/L Spout Springs Road
DE20032	74.75 L	197+26.00	C/L Spout Springs Road
DE20033	105.00 L	197+26.00	C/L Spout Springs Road
DE20034	105.00 L	197+83.00	C/L Spout Springs Road
DE20031	74.61 L	198+05.00	C/L Spout Springs Road

2 FRANK DUNCAN
SEE SHEETS 6, 8

DWESMT - PAR 2/SV348 - TRACT 5 REQ'D DRWY. EASM'T. DE20591

PNT	OFFSET/	STATION/	ALIGNMENT
DE20035	79.92 L	200+62.00	C/L Spout Springs Road
DE20036	79.61 L	199+50.00	C/L Spout Springs Road
DE20037	145.00 L	200+00.00	C/L Spout Springs Road
DE20038	145.00 L	200+62.00	C/L Spout Springs Road
DE20035	79.92 L	200+62.00	C/L Spout Springs Road

3 PASSCO BRASELTON DST
SEE SHEETS 6, 8

PESWT - PAR 3/SV364 EASM'T. FOR CONST. AND MAINT. OF SLOPES AND UTILITIES DE20008

PNT	OFFSET/ DIST	STATION/ BEARING	ALIGNMENT
DE20046	52.61 R	198+80.00	C/L Spout Springs Road
	126.52	N 19°18'03.6" W	
4793	51.49 R	200+07.11	C/L Spout Springs Road
	293.70	N 17°36'37.4" W	
4796	52.18 R	203+01.83	C/L Spout Springs Road
	12.82	N 72°30'09.5" E	
DE20051	65.00 R	203+01.87	C/L Spout Springs Road
	419.79	S 18°20'00.7" E	
DE20052	67.00 R	198+80.00	C/L Spout Springs Road
	14.39	S 70°52'41.9" W	
DE20046	52.61 R	198+80.00	C/L Spout Springs Road

REQD EASMT = 6259.57 SF
REQD EASMT = 0.144 ACRES
REMAINDER = +/- 12 ACRES

DWESMT - PAR 3/SV364 REQ'D DRWY. EASM'T. DE20009

PNT	OFFSET/	STATION/	ALIGNMENT
DE20053	68.03 R	200+38.00	C/L Spout Springs Road
DE20054	67.03 R	201+80.00	C/L Spout Springs Road
DE20055	95.00 R	201+02.00	C/L Spout Springs Road
DE20056	95.00 R	200+38.00	C/L Spout Springs Road
DE20053	68.03 R	200+38.00	C/L Spout Springs Road

3A ALDI, INC
SEE SHEET 8

PESWT - PAR 3A/SV453 EASM'T. FOR CONST. AND MAINT. OF SLOPES AND UTILITIES DE20010

PNT	OFFSET/ DIST	STATION/ BEARING	ALIGNMENT
4796	52.18 R	203+01.83	C/L Spout Springs Road
	143.42	N 17°36'37.9" W	
4721	51.49 R	204+45.26	C/L Spout Springs Road
	33.51	N 72°30'09.2" E	
DE20317	85.00 R	204+45.35	C/L Spout Springs Road
	143.42	S 17°20'01.2" E	
DE20318	85.00 R	203+01.93	C/L Spout Springs Road
	20.00	S 72°30'09.5" W	
DE20051	65.00 R	203+01.87	C/L Spout Springs Road
	12.82	S 72°30'09.5" W	
4796	52.18 R	203+01.83	C/L Spout Springs Road

REQD EASMT = 4755.93 SF
REQD EASMT = 0.109 ACRES
REMAINDER = +/- 0.84 ACRES

3B ALDI, INC
SEE SHEET 8

PESWT - PAR 3B/SV452 EASM'T. FOR CONST. AND MAINT. OF SLOPES AND UTILITIES DE20011

PNT	OFFSET/ DIST	STATION/ BEARING	ALIGNMENT
4721	51.49 R	204+45.26	C/L Spout Springs Road
	205.57	N 17°36'37.6" W	
4512	50.51 R	206+50.82	C/L Spout Springs Road
	74.69	N 24°02'55.0" E	
4519	46.06 R	15+60.08	Thompsons Mill Road
	27.73	N 69°21'22.1" E	
4522	46.87 R	15+89.64	Thompsons Mill Road

ARC LENGTH = 174.12
CHORD BEAR = N 69°54'52.7" E
LNTH CHORD = 174.10
RADIUS = 3171.65
DEGREE = 1°48'23.4"

4575	45.07 R	17+65.25	Thompsons Mill Road
	29.94	S 18°35'53.7" E	
DE20319	75.00 R	17+64.85	Thompsons Mill Road
	185.95	S 70°21'05.3" W	
DE20320	75.00 R	15+75.00	Thompsons Mill Road
	236.12	S 9°42'32.6" E	
DE20317	85.00 R	204+45.35	C/L Spout Springs Road
	33.51	S 72°30'09.2" W	
4721	51.49 R	204+45.26	C/L Spout Springs Road

REQD EASMT = 17635.81 SF
REQD EASMT = 0.405 ACRES
REMAINDER = +/- 1.5 ACRES

3C ALDI, INC
SEE SHEET 8

PESWT - PAR 3C/SV454 EASM'T. FOR CONST. AND MAINT. OF SLOPES AND UTILITIES DE20012

PNT	OFFSET/ DIST	STATION/ BEARING	ALIGNMENT
4575	45.07 R	17+65.25	Thompsons Mill Road

ARC LENGTH = 34.94
CHORD BEAR = N 71°48'10.7" E
LNTH CHORD = 34.94
RADIUS = 3171.65
DEGREE = 1°48'23.4"

4510	45.59 R	18+00.64	Thompsons Mill Road
	48.72	N 72°38'33.9" E	
DE21432	46.44 R	18+50.00	Thompsons Mill Road
	28.56	S 17°57'17.8" E	
DE21433	75.00 R	18+50.00	Thompsons Mill Road
	83.32	S 71°20'52.6" W	
DE20319	75.00 R	17+64.85	Thompsons Mill Road
	29.94	N 18°35'53.7" W	
4575	45.07 R	17+65.25	Thompsons Mill Road

REQD EASMT = 2455.28 SF
REQD EASMT = 0.056 ACRES
REMAINDER = +/- 2.1 ACRES

STV 100 Years
3700 CRESTWOOD PARKWAY NW, SUITE 800
DULUTH, GEORGIA 30096
PHONE: (770)452-0797 FAX: (770)936-9171

DATE	REVISIONS	DATE	REVISIONS

HALL COUNTY
DEPARTMENT OF PUBLIC WORKS

RIGHT OF WAY DATA

PROJECT NO: 0015280
COUNTY: HALL
LAND LOT NO: N/A
LAND DISTRICT: N/A
GMD: 1397 / 392
DATE 9/28/22 SH 7 OF 46

SPOUT SPRINGS RD

Curve* 1
PI Sta* 197+89.27
N* 1492766.4526
E* 2385796.1942
DELTA* 04°31'18.0" (RT)
D* 00°22'55.10"
T* 592.19
L* 1183.77
R* 15000.00
E* 11.69
e* N/A

FRIENDSHIP ROAD

Curve* 1
PI Sta* 12+49.94
N* 1493677.5710
E* 2385273.3100
DELTA* 1°38'33.6" (LT)
D* 5°43'46.48"
T* 14.34
L* 28.67
R* 1000.00
E* 0.10
e* N/A

Curve* 2
PI Sta* 13+82.00
N* 1493639.6810
E* 2385399.8110
DELTA* 34°12'07.8" (RT)
D* 57°17'44.81"
T* 30.77
L* 59.69
R* 100.00
E* 4.63
e* N/A

THOMPSONS MILL ROAD

Curve* 1
PI Sta* 14+12.86
N* 1493664.3580
E* 2385449.9750
DELTA* 31°28'47.8" (RT)
D* 7°38'21.97"
T* 211.38
L* 412.07
R* 750.00
E* 29.22
e* N/A

Curve* 2
PI Sta* 18+56.81
N* 1493815.1760
E* 2385878.8700
DELTA* 3°03'34.0" (RT)
D* 1°38'13.28"
T* 93.47
L* 186.89
R* 3500.00
E* 1.25
e* N/A

STATION EQUALITY FOR THOMPSONS MILL ROAD AT FRIENDSHIP ROAD

THOMPSONS MILL RD STA. 13+55.03
= FRIENDSHIP RD STA. 14+19.98
N 1493608.7890
E 2385424.9375

NOTE: END 2'-6" C/G BEGIN 2' PAVED SHOULDER FRIENDSHIP ROAD STA. 13+73.79 11.00' LT

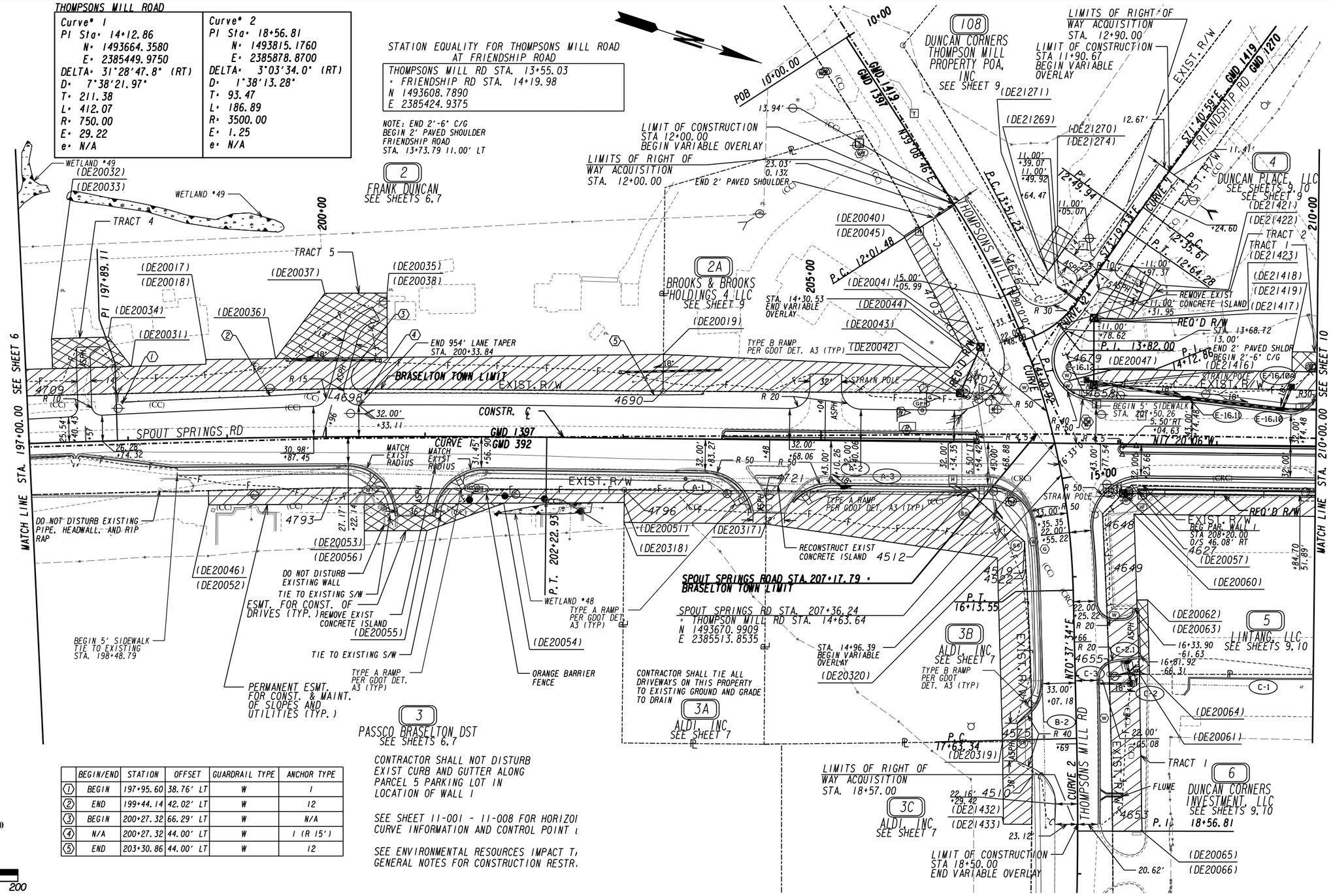

	BEGIN/END	STATION	OFFSET	GUARDRAIL TYPE	ANCHOR TYPE
1	BEGIN	197+95.60	38.76' LT	W	I
2	END	199+44.14	42.02' LT	W	12
3	BEGIN	200+27.32	66.29' LT	W	N/A
4	N/A	200+27.32	44.00' LT	W	I (R 15')
5	END	203+30.86	44.00' LT	W	12

CONTRACTOR SHALL NOT DISTURB EXIST CURB AND GUTTER ALONG PARCEL 5 PARKING LOT IN LOCATION OF WALL 1

SEE SHEET 11-001 - 11-008 FOR HORIZOI CURVE INFORMATION AND CONTROL POINT I

SEE ENVIRONMENTAL RESOURCES IMPACT T, GENERAL NOTES FOR CONSTRUCTION RESTR.

STV 100 Years
3700 CRESTWOOD PARKWAY NW, SUITE 800
DULUTH, GEORGIA 30096
PHONE: (770)452-0797 FAX: (770)936-9171

SCALE IN FEET
0 50 100 200

PROPERTY AND EXISTING R/W LINE
REQUIRED R/W LINE
CONSTRUCTION LIMITS
EASEMENT FOR CONSTR & MAINTENANCE OF SLOPES AND UTILITIES
EASEMENT FOR CONSTR OF SLOPES
EASEMENT FOR CONSTR OF DRIVES

BEGIN LIMIT OF ACCESS.....BLA
END LIMIT OF ACCESS.....ELA
LIMIT OF ACCESS
REQ'D R/W & LIMIT OF ACCESS
ORANGE BARRIER FENCE
ESA - ENV. SENSITIVE AREA (SEE ERIT TABLE)

DATE	REVISIONS		DATE	REVISIONS	

HALL COUNTY
DEPARTMENT OF PUBLIC WORKS

RIGHT OF WAY PLANS

PROJECT NO: 0015280
COUNTY: HALL
LAND LOT NO: N/A
LAND DISTRICT: N/A
GMD: 1397 / 392 / 1419 / 1270
DATE 9/28/22 SH 8 OF 46

2A BROOKS & BROOKS HOLDINGS 4, LLC
SEE SHEET 8

REQD R/W - PAR 2A/SV451 REQ'D R/W DE20006

PNT	OFFSET/ DIST		STATION/ BEARING	ALIGNMENT
DE20041	42.90	R	13+45.00	Thompsons Mill Road
	52.15		N 45°57'53.2" E	
4707	37.23	R	13+99.78	Thompsons Mill Road
	43.39		S 17°36'37.3" E	
DE20042	49.44	L	206+40.00	C/L Spout Springs Road
	50.87		N 84°14'36.5" W	
DE20041	42.90	R	13+45.00	Thompsons Mill Road

REQD R/W = 1013.10 SF
REQD R/W = 0.023 ACRES
REMAINDER = +/- 1.5 ACRES

PESMT - PAR 2A/SV451 EASM'T. FOR CONST. AND MAINT. OF SLOPES AND UTILITIES DE20007

PNT	OFFSET/ DIST		STATION/ BEARING	ALIGNMENT
DE20040	42.19	R	12+00.00	Thompsons Mill Road

ARC LENGTH = 109.08
CHORD BEAR = N 44°35'13.8" E
LNTH CHORD = 109.07
RADIUS = 2268.47
DEGREE = 2°31'32.7"

4703	44.36	R	13+15.75	Thompsons Mill Road
	27.58		N 45°57'53.1" E	
DE20041	42.90	R	13+45.00	Thompsons Mill Road
	50.87		S 84°14'36.5" E	
DE20042	49.44	L	206+40.00	C/L Spout Springs Road
	300.11		S 17°36'37.6" E	
4690	48.00	L	203+39.89	C/L Spout Springs Road
	37.00		S 72°30'03.8" W	
DE20019	85.00	L	203+39.78	C/L Spout Springs Road
	290.39		N 15°21'41.8" W	
DE20043	75.00	L	206+30.00	C/L Spout Springs Road
	22.62		N 74°08'22.7" W	
DE20044	60.00	R	13+40.00	Thompsons Mill Road
	128.73		S 44°22'35.9" W	
DE20045	60.00	R	12+00.00	Thompsons Mill Road
	17.81		N 50°51'13.7" W	
DE20040	42.19	R	12+00.00	Thompsons Mill Road

REQD EASMT = 12212.39 SF
REQD EASMT = 0.280 ACRES

4 DUNCAN PLACE, LLC
SEE SHEETS 8, 10

REQD R/W - PAR 4/SV346 REQ'D R/W DE20013

PNT	OFFSET/ DIST		STATION/ BEARING	ALIGNMENT
4679	32.88	L	13+90.88	Friendship Road
	46.67		N 72°26'11.6" W	
DE21417	23.39	L	13+55.00	Friendship Road
	67.82		N 72°01'57.0" E	
DE21416	58.99	L	207+75.00	C/L Spout Springs Road
	14.22		S 16°38'32.4" E	
4658	59.17	L	207+60.79	C/L Spout Springs Road
	32.21		S 48°24'12.9" W	
4679	32.88	L	13+90.88	Friendship Road

REQD R/W = 1127.23 SF
REQD R/W = 0.026 ACRES
REMAINDER = +/- 2.8 ACRES

PESMT - PAR 4/SV346 EASM'T. FOR CONST. AND MAINT. OF SLOPES AND UTILITIES DE20014

PNT	OFFSET/ DIST		STATION/ BEARING	ALIGNMENT
4669	52.71	L	212+94.48	C/L Spout Springs Road
	519.51		S 16°38'32.4" E	
DE21416	58.99	L	207+75.00	C/L Spout Springs Road
	16.01		S 72°01'57.0" W	
DE20047	75.00	L	207+74.83	C/L Spout Springs Road
	265.18		N 17°20'06.4" W	
DE20048	75.00	L	210+40.00	C/L Spout Springs Road
	15.00		S 72°39'53.6" W	
DE20049	90.00	L	210+40.00	C/L Spout Springs Road
	232.64		N 17°20'06.4" W	
DE20050	90.00	L	212+72.64	C/L Spout Springs Road
	43.21		N 42°18'24.4" E	
4669	52.71	L	212+94.48	C/L Spout Springs Road

REQD EASMT = 13357.78 SF
REQD EASMT = 0.307 ACRES

DWESMT - PAR 4/SV346 - TRACT 1 REQ'D DRWY. EASM'T. DE20015

PNT	OFFSET/		STATION/	ALIGNMENT
DE20048	75.00	L	210+40.00	C/L Spout Springs Road
DE21418	75.00	L	209+75.00	C/L Spout Springs Road
DE21419	95.00	L	209+75.00	C/L Spout Springs Road
DE21420	95.00	L	210+40.00	C/L Spout Springs Road
DE20048	75.00	L	210+40.00	C/L Spout Springs Road

DWESMT - PAR 4/SV346 - TRACT 2 REQ'D DRWY. EASM'T. DE20016

PNT	OFFSET/		STATION/	ALIGNMENT
DE21417	74.53	L	13+59.20	Thompsons Mill Road
DE21421	24.32	L	12+90.00	Friendship Road
DE21422	60.00	L	12+90.00	Friendship Road
DE21423	55.00	L	13+35.00	Friendship Road
DE21417	74.53	L	13+59.20	Thompsons Mill Road

5 LINTANG, LLC
SEE SHEETS 8, 10

REQD R/W - PAR 5/SV361 REQ'D R/W DE20017

PNT	OFFSET/ DIST		STATION/ BEARING	ALIGNMENT
DE20057	50.00	R	208+05.83	C/L Spout Springs Road
	11.96		N 62°41'07.7" W	
4627	41.49	R	208+14.24	C/L Spout Springs Road
	262.18		N 16°38'32.4" W	
4644	44.66	R	210+76.40	C/L Spout Springs Road
	5.34		N 72°17'24.3" E	
DE20058	50.00	R	210+76.44	C/L Spout Springs Road
	270.61		S 17°20'06.4" E	
DE20057	50.00	R	208+05.83	C/L Spout Springs Road

REQD R/W = 1851.86 SF
REQD R/W = 0.043 ACRES
REMAINDER = +/- 1.2 ACRES

PESMT - PAR 5/SV361 EASM'T. FOR CONST. AND MAINT. OF SLOPES AND UTILITIES DE20018

PNT	OFFSET/ DIST		STATION/ BEARING	ALIGNMENT
4655	232.73	R	207+93.89	C/L Spout Springs Road

ARC LENGTH = 109.92
CHORD BEAR = S 69°45'51.7" W
LNTH CHORD = 109.92
RADIUS = 7601.54
DEGREE = 0°45'13.5"

4649	122.95	R	207+88.33	C/L Spout Springs Road
	52.27		S 69°21'22.1" W	
4648	70.77	R	207+85.31	C/L Spout Springs Road
	29.20		N 62°41'07.7" W	
DE20057	50.00	R	208+05.83	C/L Spout Springs Road
	270.61		N 17°20'06.4" W	
DE20058	50.00	R	210+76.44	C/L Spout Springs Road
	21.00		N 72°17'24.3" E	
DE20059	71.00	R	210+76.57	C/L Spout Springs Road
	259.57		S 17°20'06.3" E	
DE20060	71.00	R	208+17.00	C/L Spout Springs Road
	161.58		N 70°00'29.4" E	
DE20061	65.00	L	17+00.03	Thompsons Mill Road
	30.60		S 17°56'22.7" E	
4655	232.73	R	207+93.89	C/L Spout Springs Road

REQD EASMT = 10899.03 SF
REQD EASMT = 0.250 ACRES

DWESMT - PAR 5/SV361 REQ'D DRWY. EASM'T. DE20019

PNT	OFFSET/		STATION/	ALIGNMENT
DE20061	65.00	L	17+00.03	Thompsons Mill Road
DE20062	64.19	L	16+25.00	Thompsons Mill Road
DE20063	75.00	L	16+25.00	Thompsons Mill Road
DE20064	75.00	L	17+00.28	Thompsons Mill Road
DE20061	65.00	L	17+00.03	Thompsons Mill Road

6 DUNCAN CORNERS INVESTMENT, LLC
SEE SHEETS 8, 10

REQD R/W - PAR 6/SV359 REQ'D R/W DE20020

PNT	OFFSET/ DIST		STATION/ BEARING	ALIGNMENT
4644	44.66	R	210+76.40	C/L Spout Springs Road
	171.51		N 16°38'32.4" W	
4643	46.73	R	212+47.90	C/L Spout Springs Road
	3.27		N 72°39'57.8" E	
DE20067	50.00	R	212+47.90	C/L Spout Springs Road
	171.46		S 17°20'06.8" E	
DE20058	50.00	R	210+76.44	C/L Spout Springs Road
	5.34		S 72°17'24.3" W	
4644	44.66	R	210+76.40	C/L Spout Springs Road

REQD R/W = 738.17 SF
REQD R/W = 0.017 ACRES
REMAINDER = +/- 8.5 ACRES

PESMT - PAR 6/SV359 - TRACT 1 EASM'T. FOR CONST. AND MAINT. OF SLOPES AND UTILITIES DE20592

PNT	OFFSET/ DIST		STATION/ BEARING	ALIGNMENT
DE20065	35.25	L	18+57.00	Thompsons Mill Road

ARC LENGTH = 16.85
CHORD BEAR = S 71°18'39.8" W
LNTH CHORD = 16.85
RADIUS = 7601.54
DEGREE = 0°45'13.5"

4653	35.04	L	18+40.31	Thompsons Mill Road

ARC LENGTH = 141.82
CHORD BEAR = S 70°42'47.1" W
LNTH CHORD = 141.82
RADIUS = 7601.54
DEGREE = 0°45'13.5"

4655	34.40	L	16+99.26	Thompsons Mill Road
	30.60		N 17°56'22.7" W	
DE20061	65.00	L	17+00.03	Thompsons Mill Road
	158.70		N 71°05'07.3" E	
DE20066	65.00	L	18+57.00	Thompsons Mill Road
	29.75		S 17°50'02.0" E	
DE20065	35.25	L	18+57.00	Thompsons Mill Road

REQD EASMT = 4743.31 SF
REQD EASMT = 0.109 ACRES

PESMT - PAR 6/SV359 - TRACT 2 EASM'T. FOR CONST. AND MAINT. OF SLOPES AND UTILITIES DE20021

PNT	OFFSET/ DIST		STATION/ BEARING	ALIGNMENT
DE20058	50.00	R	210+76.44	C/L Spout Springs Road
	171.46		N 17°20'06.8" W	
DE20067	50.00	R	212+47.90	C/L Spout Springs Road
	21.00		N 72°40'20.5" E	
DE20068	71.00	R	212+47.90	C/L Spout Springs Road
	171.32		S 17°20'06.6" E	
DE20059	71.00	R	210+76.57	C/L Spout Springs Road
	21.00		S 72°17'24.3" W	
DE20058	50.00	R	210+76.44	C/L Spout Springs Road

REQD EASMT = 3599.29 SF
REQD EASMT = 0.083 ACRES

DWESMT - PAR 6/SV359 REQ'D DRWY. EASM'T. DE20593

PNT	OFFSET/		STATION/	ALIGNMENT
DE20059	71.00	R	210+76.57	C/L Spout Springs Road
DE20069	71.00	R	211+65.00	C/L Spout Springs Road
DE20070	95.00	R	211+00.00	C/L Spout Springs Road
DE20071	95.00	R	210+76.73	C/L Spout Springs Road
DE20059	71.00	R	210+76.57	C/L Spout Springs Road

108 DUNCAN CORNERS THOMPSON MILL PROPERTY POA, INC
SEE SHEET 8

DWESMT - PAR 108/SV347 REQ'D DRWY. EASM'T. DE20488

PNT	OFFSET/		STATION/	ALIGNMENT
DE21270	40.84	R	13+00.00	Friendship Road
DE21269	50.00	L	13+02.68	Thompsons Mill Road

ARC LENGTH = 21.22
CHORD BEAR = S 46°07'01.7" W
LNTH CHORD = 21.22
RADIUS = 800.00
DEGREE = 7°09'43.1"

DE21271	60.00	R	13+33.39	Friendship Road
DE21274	60.00	R	13+00.00	Friendship Road
DE21270	40.84	R	13+00.00	Friendship Road

REMAINDER = +/- 1.9 ACRES

STV 100 Years
3700 CRESTWOOD PARKWAY NW, SUITE 800
DULUTH, GEORGIA 30096
PHONE: (770)452-0797 FAX: (770)936-9171

DATE	REVISIONS	DATE	REVISIONS

HALL COUNTY
DEPARTMENT OF PUBLIC WORKS

RIGHT OF WAY DATA

PROJECT NO: 0015280
COUNTY: HALL
LAND LOT NO: N/A
LAND DISTRICT: N/A
GMD: 1397 / 392 / 1419 / 1270
DATE 9/28/22 SH 9 OF 46

5/24/2023	GPLOT-V8	0015280_60-10.dgn	SHEET NO.	TOTAL SHEETS
GoCC	gplotborder-V81-P0.tbl	GRWPLN	10	46

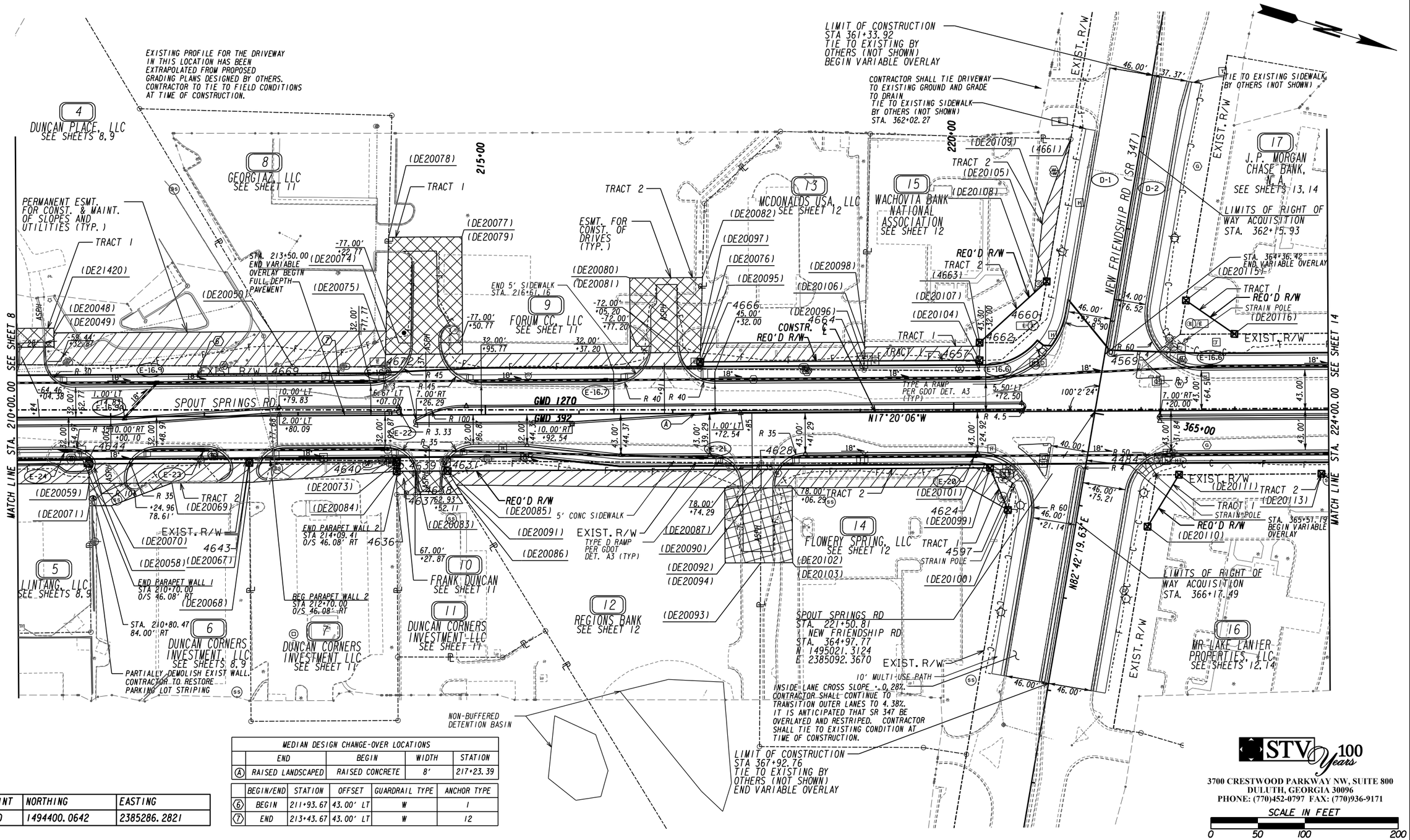

MEDIAN DESIGN CHANGE-OVER LOCATIONS				
	END	BEGIN	WIDTH	STATION
(A)	RAISED LANDSCAPED	RAISED CONCRETE	8'	217+23.39

	BEGIN/END	STATION	OFFSET	GUARDRAIL TYPE	ANCHOR TYPE
(6)	BEGIN	211+93.67	43.00' LT	W	1
(7)	END	213+43.67	43.00' LT	W	12

REFERENCE POINT	NORTHING	EASTING
STA 215+00.00	1494400.0642	2385286.2821

STV 100 Years
3700 CRESTWOOD PARKWAY NW, SUITE 800
DULUTH, GEORGIA 30096
PHONE: (770)452-0797 FAX: (770)936-9171

SCALE IN FEET
0 50 100 200

PROPERTY AND EXISTING R/W LINE
REQUIRED R/W LINE
CONSTRUCTION LIMITS
EASEMENT FOR CONSTR & MAINTENANCE OF SLOPES AND UTILITIES
EASEMENT FOR CONSTR OF SLOPES
EASEMENT FOR CONSTR OF DRIVES

BEGIN LIMIT OF ACCESS.....BLA
END LIMIT OF ACCESS.....ELA
LIMIT OF ACCESS
REQ'D R/W & LIMIT OF ACCESS
ORANGE BARRIER FENCE
ESA - ENV. SENSITIVE AREA
(SEE ERIT TABLE)

DATE	REVISIONS		DATE	REVISIONS	

HALL COUNTY
DEPARTMENT OF PUBLIC WORKS

RIGHT OF WAY PLANS

PROJECT NO: 0015280
COUNTY: HALL
LAND LOT NO: N/A
LAND DISTRICT: N/A
GMD: 1270 / 392
DATE 9/28/22 SH 10 OF 46

7 DUNCAN CORNERS INVESTMENT LLC
SEE SHEET 10

REQD R/W - PAR 7/SV358 REQ'D R/W DE20022

PNT	OFFSET/ DIST	STATION/ BEARING	ALIGNMENT
4643	46.73 R	212+47.90	C/L Spout Springs Road
	157.13	N 16°38'32.4" W	
4640	48.63 R	214+05.02	C/L Spout Springs Road
	1.37	N 72°42'01.4" E	
DE20073	50.00 R	214+05.02	C/L Spout Springs Road
	157.12	S 17°20'06.0" E	
DE20067	50.00 R	212+47.90	C/L Spout Springs Road
	3.27	S 72°39'57.8" W	
4643	46.73 R	212+47.90	C/L Spout Springs Road

REQD R/W = 364.20 SF
REQD R/W = 0.008 ACRES
REMAINDER = +/- 1.0 ACRES

PESWT - PAR 7/SV358 EASW'T. FOR CONST. AND MAINT. OF SLOPES AND UTILITIES DE20594

PNT	OFFSET/ DIST	STATION/ BEARING	ALIGNMENT
DE20067	50.00 R	212+47.90	C/L Spout Springs Road
	157.12	N 17°20'06.0" W	
DE20073	50.00 R	214+05.02	C/L Spout Springs Road
	10.00	N 72°42'01.4" E	
DE20084	60.00 R	214+05.01	C/L Spout Springs Road
	157.50	S 21°20'24.0" E	
DE20068	71.00 R	212+47.90	C/L Spout Springs Road
	21.00	S 72°40'20.5" W	
DE20067	50.00 R	212+47.90	C/L Spout Springs Road

REQD EASWT = 2435.32 SF
REQD EASWT = 0.056 ACRES

8 GEORGIAZ LLC
SEE SHEET 10

PESWT - PAR 8/SV345 EASW'T. FOR CONST. AND MAINT. OF SLOPES AND UTILITIES DE20023

PNT	OFFSET/ DIST	STATION/ BEARING	ALIGNMENT
4672	51.52 L	213+93.32	C/L Spout Springs Road
	98.85	S 16°38'32.3" E	
4669	52.71 L	212+94.48	C/L Spout Springs Road
	43.21	S 42°18'24.4" W	
DE20050	90.00 L	212+72.64	C/L Spout Springs Road
	121.93	N 17°20'06.4" W	
DE20074	90.00 L	213+94.57	C/L Spout Springs Road
	38.50	N 74°31'38.6" E	
4672	51.52 L	213+93.32	C/L Spout Springs Road

REQD EASWT = 4175.96 SF
REQD EASWT = 0.096 ACRES
REMAINDER = +/- 1.1 ACRES

9 FORUM CC, LLC
SEE SHEET 10

PESWT - PAR 9/SV344 EASW'T. FOR CONST. AND MAINT. OF SLOPES AND UTILITIES DE20024

PNT	OFFSET/ DIST	STATION/ BEARING	ALIGNMENT
4666	47.45 L	217+29.35	C/L Spout Springs Road
	336.06	S 16°38'32.4" E	
4672	51.52 L	213+93.32	C/L Spout Springs Road
	13.49	S 74°31'38.6" W	
DE20075	65.00 L	213+93.76	C/L Spout Springs Road
	336.17	N 17°20'06.4" W	
DE20076	65.00 L	217+29.92	C/L Spout Springs Road
	17.56	N 74°31'38.6" E	
4666	47.45 L	217+29.35	C/L Spout Springs Road

REQD EASWT = 5215.56 SF
REQD EASWT = 0.120 ACRES
REMAINDER = +/- 13 ACRES

DWESWT - PAR 9/SV344 - TRACT 1 REQ'D DRWY. EASW'T. DE20025

PNT	OFFSET/	STATION/	ALIGNMENT
DE20077	65.00 L	214+76.00	C/L Spout Springs Road
DE20075	65.00 L	213+93.76	C/L Spout Springs Road
DE20078	190.00 L	213+97.82	C/L Spout Springs Road
DE20079	190.00 L	214+76.00	C/L Spout Springs Road
DE20077	65.00 L	214+76.00	C/L Spout Springs Road

DWESWT - PAR 9/SV344 - TRACT 2 REQ'D DRWY. EASW'T. DE20026

PNT	OFFSET/	STATION/	ALIGNMENT
DE20076	65.00 L	217+29.92	C/L Spout Springs Road
DE20080	65.00 L	216+55.00	C/L Spout Springs Road
DE20081	145.00 L	216+55.00	C/L Spout Springs Road
DE20082	145.00 L	217+32.53	C/L Spout Springs Road
DE20076	65.00 L	217+29.92	C/L Spout Springs Road

10 FRANK DUNCAN
SEE SHEET 10

REQD R/W - PAR 10/SV441 REQ'D R/W DE20027

PNT	OFFSET/ DIST	STATION/ BEARING	ALIGNMENT
4640	48.63 R	214+05.02	C/L Spout Springs Road
	17.44	N 16°38'32.3" W	
4639	48.84 R	214+22.46	C/L Spout Springs Road
	11.40	N 60°44'31.4" E	
DE20083	60.00 R	214+24.82	C/L Spout Springs Road
	19.80	S 17°20'06.4" E	
DE20084	60.00 R	214+05.01	C/L Spout Springs Road
	11.37	S 72°42'01.4" W	
4640	48.63 R	214+05.02	C/L Spout Springs Road

REQD R/W = 209.61 SF
REQD R/W = 0.005 ACRES
REMAINDER = +/- 0.01 ACRES

DWESWT - PAR 10/SV441 REQ'D DRWY. EASW'T. DE20028

PNT	OFFSET/	STATION/	ALIGNMENT
DE20084	60.00 R	214+05.01	C/L Spout Springs Road
DE20083	60.00 R	214+24.82	C/L Spout Springs Road
4638	61.90 R	214+25.22	C/L Spout Springs Road
4637	84.98 R	214+25.00	C/L Spout Springs Road
4636	84.79 R	214+05.00	C/L Spout Springs Road
DE20084	60.00 R	214+05.01	C/L Spout Springs Road

11 DUNCAN CORNERS INVESTMENT LLC
SEE SHEET 10

REQD R/W - PAR 11/SV357 REQ'D R/W DE20029

PNT	OFFSET/ DIST	STATION/ BEARING	ALIGNMENT
4639	48.84 R	214+22.46	C/L Spout Springs Road
	30.46	N 16°38'32.3" W	
4631	49.21 R	214+52.92	C/L Spout Springs Road
	12.60	N 41°33'03.4" E	
DE20085	60.00 R	214+59.43	C/L Spout Springs Road
	34.62	S 17°20'06.4" E	
DE20083	60.00 R	214+24.81	C/L Spout Springs Road
	11.40	S 60°44'31.4" W	
4639	48.84 R	214+22.46	C/L Spout Springs Road

REQD R/W = 356.23 SF
REQD R/W = 0.008 ACRES
REMAINDER = +/- 0.49 ACRES

DWESWT - PAR 11/SV357 REQ'D DRWY. EASW'T. DE20030

PNT	OFFSET/	STATION/	ALIGNMENT
DE20083	60.00 R	214+24.81	C/L Spout Springs Road
DE20085	60.00 R	214+59.43	C/L Spout Springs Road
DE20086	85.00 R	214+74.52	C/L Spout Springs Road
4637	84.98 R	214+24.99	C/L Spout Springs Road
4638	61.90 R	214+25.22	C/L Spout Springs Road
DE20083	60.00 R	214+24.81	C/L Spout Springs Road

STV 100 Years
3700 CRESTWOOD PARKWAY NW, SUITE 800
DULUTH, GEORGIA 30096
PHONE: (770)452-0797 FAX: (770)936-9171

DATE	REVISIONS	DATE	REVISIONS

HALL COUNTY
DEPARTMENT OF PUBLIC WORKS

RIGHT OF WAY DATA

PROJECT NO: 0015280
COUNTY: HALL
LAND LOT NO: N/A
LAND DISTRICT: N/A
GMD: 1270 / 392
DATE 9/28/22 SH 11 OF 46

12 REGIONS BANK
SEE SHEET 10

REQD R/W - PAR 12/SV356 REQ'D R/W DE20031

PNT	OFFSET/ DIST	STATION/ BEARING	ALIGNMENT
4631	49.21 R	214+52.92	C/L Spout Springs Road
	341.31	N 16°38'32.4" W	
4628	53.34 R	217+94.20	C/L Spout Springs Road
	6.66	N 73°21'27.6" E	
DE20087	60.00 R	217+94.12	C/L Spout Springs Road
	334.69	S 17°20'06.4" E	
DE20085	60.00 R	214+59.43	C/L Spout Springs Road
	12.60	S 41°33'03.4" W	
4631	49.21 R	214+52.92	C/L Spout Springs Road

REQD R/W = 2942.47 SF
REQD R/W = 0.068 ACRES
REMAINDER = +/- 3.7 ACRES

PESMT - PAR 12/SV356 EASM'T. FOR CONST. AND MAINT. OF SLOPES AND UTILITIES DE20032

PNT	OFFSET/ DIST	STATION/ BEARING	ALIGNMENT
DE20085	60.00 R	214+59.43	C/L Spout Springs Road
	334.69	N 17°20'06.4" W	
DE20087	60.00 R	217+94.12	C/L Spout Springs Road
	20.00	N 73°21'27.6" E	
DE20090	80.00 R	217+93.88	C/L Spout Springs Road
	325.43	S 16°27'17.3" E	
DE20091	75.00 R	214+68.48	C/L Spout Springs Road
	17.52	S 41°33'03.4" W	
DE20085	60.00 R	214+59.43	C/L Spout Springs Road

REQD EASMT = 5764.84 SF
REQD EASMT = 0.132 ACRES

DWESMT - PAR 12/SV356 REQ'D DRWY. EASM'T. DE20033

PNT	OFFSET/	STATION/	ALIGNMENT
DE20092	79.40 R	217+55.00	C/L Spout Springs Road
DE20090	80.00 R	217+93.88	C/L Spout Springs Road
DE20093	160.00 R	217+92.91	C/L Spout Springs Road
DE20094	160.00 R	217+55.00	C/L Spout Springs Road
DE20092	79.40 R	217+55.00	C/L Spout Springs Road

13 MCDONALDS USA, LLC
SEE SHEET 10

REQD R/W - PAR 13/SV343 REQ'D R/W DE20034

PNT	OFFSET/ DIST	STATION/ BEARING	ALIGNMENT
4664	45.34 L	219+04.38	C/L Spout Springs Road
	175.04	S 16°38'32.4" E	
4666	47.45 L	217+29.35	C/L Spout Springs Road
	29.27	N 82°37'23.6" E	
	7.55	S 74°31'38.6" W	
DE20095	55.00 L	217+29.60	C/L Spout Springs Road
	175.09	N 17°20'06.4" W	
DE20096	55.00 L	219+04.69	C/L Spout Springs Road
	9.67	N 74°31'38.6" E	
4664	45.34 L	219+04.38	C/L Spout Springs Road

REQD R/W = 1506.61 SF
REQD R/W = 0.035 ACRES
REMAINDER = +/- 0.91 ACRES

PESMT - PAR 13/SV343 EASM'T. FOR CONST. AND MAINT. OF SLOPES AND UTILITIES DE20035

PNT	OFFSET/ DIST	STATION/ BEARING	ALIGNMENT
DE20096	55.00 L	219+04.69	C/L Spout Springs Road
	175.09	S 17°20'06.4" E	
DE20095	55.00 L	217+29.60	C/L Spout Springs Road
	20.01	S 74°31'38.6" W	
DE20097	75.00 L	217+30.25	C/L Spout Springs Road
	175.09	N 17°20'06.4" W	
DE20098	75.00 L	219+05.34	C/L Spout Springs Road
	20.01	N 74°31'38.6" E	
DE20096	55.00 L	219+04.69	C/L Spout Springs Road

REQD EASMT = 3501.84 SF
REQD EASMT = 0.080 ACRES

14 FLOWERY SPRING, LLC
SEE SHEET 10

REQD R/W - PAR 14/SV355-TRACT 1 REQ'D R/W DE20036

PNT	OFFSET/ DIST	STATION/ BEARING	ALIGNMENT
DE20099	60.00 R	220+38.28	C/L Spout Springs Road
	28.86	N 16°43'47.1" E	
4597	73.98 R	365+88.22	New Friendship Road
	29.27	N 82°37'23.6" E	
DE20100	73.94 R	366+17.49	New Friendship Road
	48.79	S 49°56'22.5" W	
DE20099	60.00 R	220+38.28	C/L Spout Springs Road

REQD R/W = 385.62 SF
REQD R/W = 0.009 ACRES
REMAINDER = +/- 1.7 ACRES

REQD R/W - PAR 14/SV355-TRACT 2 REQ'D R/W DE20037

PNT	OFFSET/ DIST	STATION/ BEARING	ALIGNMENT
4628	53.34 R	217+94.20	C/L Spout Springs Road
	238.51	N 16°38'32.4" W	
4624	56.22 R	220+32.69	C/L Spout Springs Road
	6.75	N 16°43'47.1" E	
DE20099	60.00 R	220+38.28	C/L Spout Springs Road
	244.16	S 17°20'06.4" E	
DE20087	60.00 R	217+94.12	C/L Spout Springs Road
	6.66	S 73°21'27.6" W	
4628	53.34 R	217+94.20	C/L Spout Springs Road

REQD R/W = 1255.78 SF
REQD R/W = 0.029 ACRES

PESMT - PAR 14/SV355 EASM'T. FOR CONST. AND MAINT. OF SLOPES AND UTILITIES DE20038

PNT	OFFSET/ DIST	STATION/ BEARING	ALIGNMENT
DE20087	60.00 R	217+94.12	C/L Spout Springs Road
	244.16	N 17°20'06.4" W	
DE20099	60.00 R	220+38.28	C/L Spout Springs Road
	48.79	N 49°56'22.5" E	
DE20100	73.94 R	366+17.49	New Friendship Road
	50.12	S 12°35'05.6" W	
DE20101	80.00 R	220+13.69	C/L Spout Springs Road
	219.81	S 17°20'05.8" E	
DE20090	80.00 R	217+93.88	C/L Spout Springs Road
	20.00	S 73°21'27.6" W	
DE20087	60.00 R	217+94.12	C/L Spout Springs Road

REQD EASMT = 5381.67 SF
REQD EASMT = 0.124 ACRES

DWESMT - PAR 14/SV355 REQ'D DRWY. EASM'T. DE20039

PNT	OFFSET/	STATION/	ALIGNMENT
DE20090	80.00 R	217+93.88	C/L Spout Springs Road
DE20102	80.00 R	218+27.00	C/L Spout Springs Road
DE20103	160.00 R	218+27.00	C/L Spout Springs Road
DE20093	160.00 R	217+92.91	C/L Spout Springs Road
DE20090	80.00 R	217+93.88	C/L Spout Springs Road

15 WACHOVIA BANK NATIONAL ASSOCIATION
SEE SHEET 10

REQD R/W - PAR 15/SV342-TRACT 1 REQ'D R/W DE20040

PNT	OFFSET/ DIST	STATION/ BEARING	ALIGNMENT
4657	43.85 L	220+27.63	C/L Spout Springs Road
	123.26	S 16°38'32.4" E	
4664	45.34 L	219+04.38	C/L Spout Springs Road
	9.67	S 74°31'38.6" W	
DE20096	55.00 L	219+04.69	C/L Spout Springs Road
	123.08	N 17°20'06.4" W	
DE20104	55.00 L	220+27.77	C/L Spout Springs Road
	11.15	N 73°21'27.7" E	
4657	43.85 L	220+27.63	C/L Spout Springs Road

REQD R/W = 1282.08 SF
REQD R/W = 0.029 ACRES
REMAINDER = +/- 1.0 ACRES

REQD R/W - PAR 15/SV342-TRACT 2 REQ'D R/W DE20041

PNT	OFFSET/ DIST	STATION/ BEARING	ALIGNMENT
DE20105	74.30 R	363+70.00	New Friendship Road
	41.65	N 82°37'23.6" E	
4660	74.24 R	364+11.65	New Friendship Road
	38.10	S 57°00'34.4" E	
4662	73.42 L	220+63.40	C/L Spout Springs Road
	35.41	S 16°38'32.4" E	
4663	73.85 L	220+27.39	C/L Spout Springs Road
	96.89	N 59°23'56.6" W	
DE20105	74.30 R	363+70.00	New Friendship Road

REQD R/W = 1678.51 SF
REQD R/W = 0.039 ACRES

PESMT - PAR 15/SV342-TRACT 1 EASM'T. FOR CONST. AND MAINT. OF SLOPES AND UTILITIES DE20042

PNT	OFFSET/ DIST	STATION/ BEARING	ALIGNMENT
DE20104	55.00 L	220+27.77	C/L Spout Springs Road
	123.08	S 17°20'06.4" E	
DE20096	55.00 L	219+04.69	C/L Spout Springs Road
	15.01	S 74°31'38.6" W	
DE20106	70.00 L	219+05.18	C/L Spout Springs Road
	122.77	N 17°20'06.4" W	
DE20107	70.00 L	220+27.95	C/L Spout Springs Road
	15.00	N 73°21'27.7" E	
DE20104	55.00 L	220+27.77	C/L Spout Springs Road

REQD EASMT = 1843.83 SF
REQD EASMT = 0.042 ACRES

PESMT - PAR 15/SV342-TRACT 2 EASM'T. FOR CONST. AND MAINT. OF SLOPES AND UTILITIES DE20043

PNT	OFFSET/ DIST	STATION/ BEARING	ALIGNMENT
4661	74.52 R	362+15.93	New Friendship Road
	154.07	N 82°37'23.7" E	
DE20105	74.30 R	363+70.00	New Friendship Road
	17.43	S 59°24'18.5" E	
DE20108	85.00 R	363+83.75	New Friendship Road
	83.90	S 79°17'18.1" W	
DE20109	90.00 R	363+00.00	New Friendship Road
	85.49	N 86°51'34.0" W	
4661	74.52 R	362+15.93	New Friendship Road

REQD EASMT = 1684.74 SF
REQD EASMT = 0.039 ACRES

16 MR LAKE LANIER PROPERTIES, LLC
SEE SHEETS 10, 14

REQD R/W - PAR 16/SV353-TRACT 1 REQ'D R/W DE20044

PNT	OFFSET/ DIST	STATION/ BEARING	ALIGNMENT
4484	68.51 R	222+15.83	C/L Spout Springs Road
	24.17	N 17°22'36.4" W	
DE20111	68.49 R	222+40.00	C/L Spout Springs Road
	64.83	S 75°50'13.4" E	
DE20110	76.05 L	366+10.00	New Friendship Road
	56.11	S 82°37'23.6" W	
4484	68.51 R	222+15.83	C/L Spout Springs Road

REQD R/W = 667.80 SF
REQD R/W = 0.015 ACRES
REMAINDER = +/- 1.5 ACRES

REQD R/W - PAR 16/SV353-TRACT 2 REQ'D R/W DE20045

PNT	OFFSET/ DIST	STATION/ BEARING	ALIGNMENT
DE20113	68.38 R	223+92.00	C/L Spout Springs Road
	34.75	N 17°22'36.4" W	
4485	68.36 R	224+26.75	C/L Spout Springs Road
	20.00	S 72°37'23.6" W	
4486	48.36 R	224+26.74	C/L Spout Springs Road
	14.92	N 17°22'36.3" W	
4503	48.35 R	224+41.66	C/L Spout Springs Road
	12.84	N 65°04'55.6" E	
4504	61.07 R	224+43.35	C/L Spout Springs Road
	36.93	N 73°06'28.6" E	
DE20114	98.00 R	224+43.07	C/L Spout Springs Road
	59.03	S 12°46'40.8" W	
DE20113	68.38 R	223+92.00	C/L Spout Springs Road

REQD R/W = 1081.69 SF
REQD R/W = 0.025 ACRES

STV 100 Years
3700 CRESTWOOD PARKWAY NW, SUITE 800
DULUTH, GEORGIA 30096
PHONE: (770)452-0797 FAX: (770)936-9171

DATE	REVISIONS	DATE	REVISIONS

HALL COUNTY
DEPARTMENT OF PUBLIC WORKS

RIGHT OF WAY DATA

PROJECT NO: 0015280
COUNTY: HALL
LAND LOT NO: N/A
LAND DISTRICT: N/A
GMD: 1270 / 392
DATE 9/28/22 SH 12 OF 46

17 J.P. MORGAN CHASE BANK, N.A.
SEE SHEETS 10, 14

REQD R/W - PAR 17/SV341-TRACT 1 REQ'D R/W DE20046

PNT	OFFSET/ DIST	STATION/ BEARING	ALIGNMENT
DE20116	81.55 L	223+00.00	C/L Spout Springs Road
	57.83	S 17°22'36.4" E	
4569	75.75 L	364+01.58	New Friendship Road
	36.58	S 82°37'23.6" W	
DE20115	75.70 L	363+65.00	New Friendship Road
	62.83	N 17°36'17.3" E	
DE20116	81.55 L	223+00.00	C/L Spout Springs Road

REQD R/W = 1041.57 SF
REQD R/W = 0.024 ACRES
REMAINDER = +/- 1.4 ACRES

REQD R/W - PAR 17/SV341-TRACT 2 REQ'D R/W DE20047

PNT	OFFSET/ DIST	STATION/ BEARING	ALIGNMENT
4566	51.66 L	224+54.38	C/L Spout Springs Road
	27.47	S 17°22'36.3" E	
4567	51.64 L	224+26.91	C/L Spout Springs Road
	18.36	S 72°33'03.1" W	
DE20117	70.00 L	224+26.87	C/L Spout Springs Road
	36.22	N 17°20'06.4" W	
DE20118	70.00 L	224+63.09	C/L Spout Springs Road
	2.20	N 79°11'33.0" E	
4577	67.82 L	224+62.84	C/L Spout Springs Road

ARC LENGTH = 18.54
CHORD BEAR = S 79°40'08.9" E
LNTH CHORD = 18.24
RADIUS = 29.50
DEGREE = 194°13'22.7"

4566	51.66 L	224+54.38	C/L Spout Springs Road

REQD R/W = 609.15 SF
REQD R/W = 0.014 ACRES

DWESMT - PAR 17/SV341 REQ'D DRWY. EASM'T. DE20048

PNT	OFFSET/	STATION/	ALIGNMENT
DE20118	70.00 L	224+63.09	C/L Spout Springs Road
DE20117	70.00 L	224+26.87	C/L Spout Springs Road
4568	81.64 L	224+26.85	C/L Spout Springs Road
DE20119	105.00 L	224+26.80	C/L Spout Springs Road
DE20120	105.00 L	224+67.10	C/L Spout Springs Road
DE20118	70.00 L	224+63.09	C/L Spout Springs Road

STV 100 Years
3700 CRESTWOOD PARKWAY NW, SUITE 800
DULUTH, GEORGIA 30096
PHONE: (770)452-0797 FAX: (770)936-9171

DATE	REVISIONS	DATE	REVISIONS

HALL COUNTY
DEPARTMENT OF PUBLIC WORKS

RIGHT OF WAY DATA

PROJECT NO: 0015280
COUNTY: HALL
LAND LOT NO: N/A
LAND DISTRICT: N/A
GMD: 1270 / 392
DATE 9/28/22 SH 13 OF 46

5/24/2023	GPLOT-V8	0015280_60-14.dgn	SHEET NO.	TOTAL SHEETS
GoCC	gplotborder-V81-P0.tbl	GRWPLN	14	46

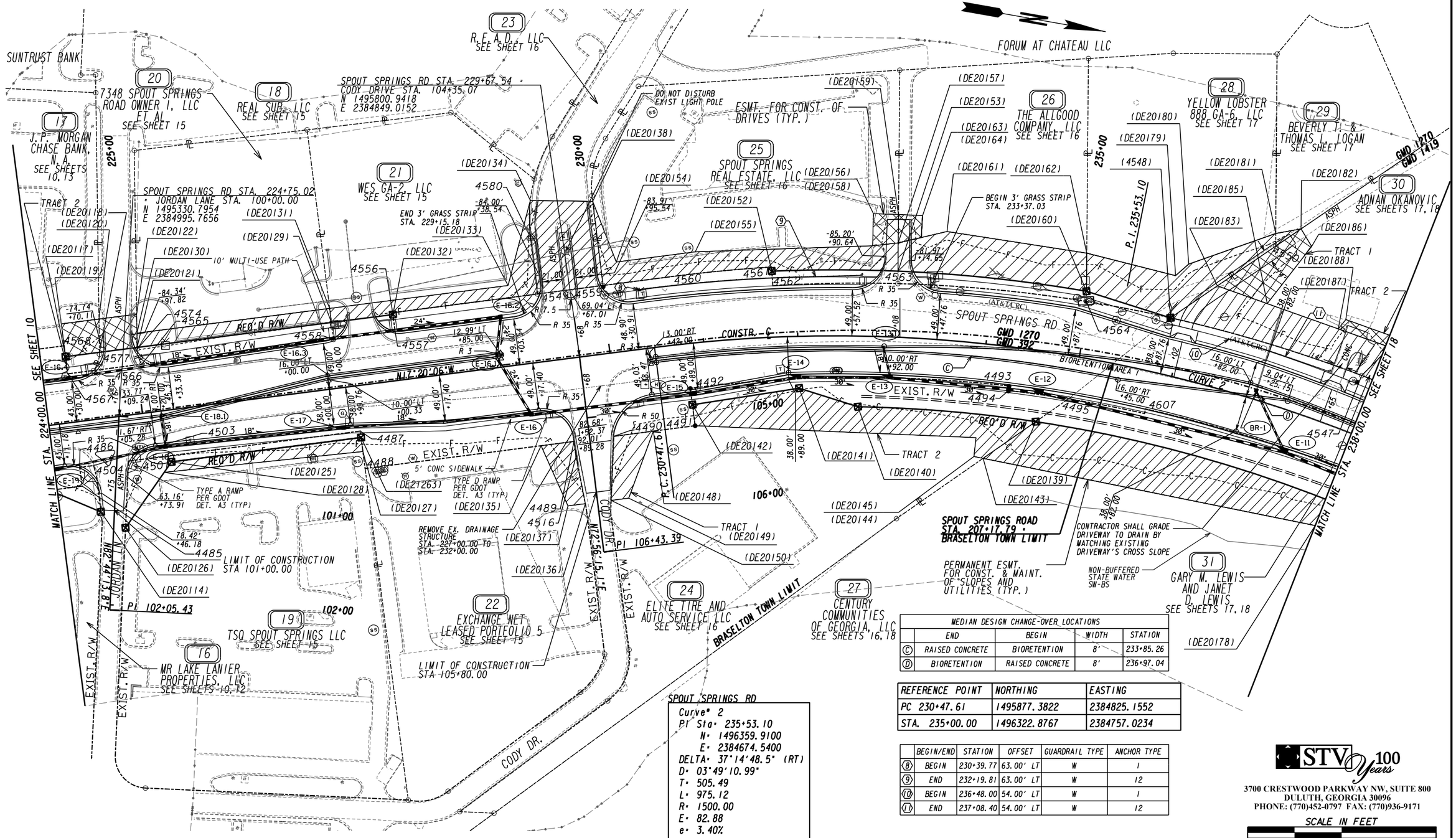

SPOUT SPRINGS RD
Curve* 2
PI Sta* 235+53.10
N* 1496359.9100
E* 2384674.5400
DELTA* 37°14'48.5" (RT)
D* 03°49'10.99"
T* 505.49
L* 975.12
R* 1500.00
E* 82.88
e* 3.40%

MEDIAN DESIGN CHANGE-OVER LOCATIONS

	END	BEGIN	WIDTH	STATION
Ⓒ	RAISED CONCRETE	BIORETENTION	8'	233+85.26
Ⓓ	BIORETENTION	RAISED CONCRETE	8'	236+97.04

REFERENCE POINT	NORTHING	EASTING
PC 230+47.61	1495877.3822	2384825.1552
STA. 235+00.00	1496322.8767	2384757.0234

	BEGIN/END	STATION	OFFSET	GUARDRAIL TYPE	ANCHOR TYPE
⑧	BEGIN	230+39.77	63.00' LT	W	1
⑨	END	232+19.81	63.00' LT	W	12
⑩	BEGIN	236+48.00	54.00' LT	W	1
⑪	END	237+08.40	54.00' LT	W	12

STV 100 Years
3700 CRESTWOOD PARKWAY NW, SUITE 800
DULUTH, GEORGIA 30096
PHONE: (770)452-0797 FAX: (770)936-9171

SCALE IN FEET
0 50 100 200

PROPERTY AND EXISTING R/W LINE
REQUIRED R/W LINE
CONSTRUCTION LIMITS
EASEMENT FOR CONSTR & MAINTENANCE OF SLOPES AND UTILITIES
EASEMENT FOR CONSTR OF SLOPES
EASEMENT FOR CONSTR OF DRIVES

BEGIN LIMIT OF ACCESS.....BLA
END LIMIT OF ACCESS.....ELA
LIMIT OF ACCESS
REQ'D R/W & LIMIT OF ACCESS
ORANGE BARRIER FENCE
ESA - ENV. SENSITIVE AREA
(SEE ERIT TABLE)

HALL COUNTY, GEORGIA CONSTITUTION 1818

DATE	REVISIONS	DATE	REVISIONS

HALL COUNTY
DEPARTMENT OF PUBLIC WORKS

RIGHT OF WAY PLANS

PROJECT NO: 0015280
COUNTY: HALL
LAND LOT NO: N/A
LAND DISTRICT: N/A
GMD: 1270 / 392 / 1419
DATE 9/28/22 SH 14 OF 46

18 REAL SUB, LLC
SEE SHEET 14

REQD R/W - PAR 18/SV339 REQ'D R/W DE20049

PNT	OFFSET/ DIST	STATION/ BEARING	ALIGNMENT
4565	51.70 L	225+05.99	C/L Spout Springs Road
	51.61	S 17°22'36.4" E	
4566	51.66 L	224+54.38	C/L Spout Springs Road

ARC LENGTH = 18.54
CHORD BEAR = N 79°40'08.9" W
LNTH CHORD = 18.24
RADIUS = 29.50
DEGREE = 194°13'22.7"

4577	67.82 L	224+62.84	C/L Spout Springs Road
	2.20	S 79°11'33.0" W	
DE20118	70.00 L	224+63.09	C/L Spout Springs Road
	40.26	N 17°20'06.4" W	
DE20121	70.00 L	225+03.36	C/L Spout Springs Road
	1.65	N 79°11'33.0" E	
4574	68.36 L	225+03.17	C/L Spout Springs Road

ARC LENGTH = 17.13
CHORD BEAR = N 63°03'30.7" E
LNTH CHORD = 16.89
RADIUS = 29.50
DEGREE = 194°13'22.7"

4565	51.70 L	225+05.99	C/L Spout Springs Road

REQD R/W = 798.67 SF
REQD R/W = 0.018 ACRES
REMAINDER = +/- 8.7 ACRES

DWESMT - PAR 18/SV339 REQ'D DRWY. EASM'T. DE20050

PNT	OFFSET/	STATION/	ALIGNMENT
DE20121	70.00 L	225+03.36	C/L Spout Springs Road
DE20118	70.00 L	224+63.09	C/L Spout Springs Road
DE20120	105.00 L	224+67.10	C/L Spout Springs Road
DE20122	105.00 L	225+07.36	C/L Spout Springs Road
DE20121	70.00 L	225+03.36	C/L Spout Springs Road

19 TSQ SPOUT SPRINGS LLC
SEE SHEET 14

REQD R/W - PAR 19/SV352 REQ'D R/W DE20051

PNT	OFFSET/ DIST	STATION/ BEARING	ALIGNMENT
4501	48.32 R	224+78.98	C/L Spout Springs Road
	247.76	N 17°22'36.4" W	
4487	48.14 R	227+26.74	C/L Spout Springs Road
	6.86	N 72°37'23.6" E	
DE21263	55.00 R	227+26.74	C/L Spout Springs Road
	202.74	S 17°20'06.4" E	
DE20125	55.00 R	225+24.00	C/L Spout Springs Road
	85.09	S 65°06'00.6" E	
DE20126	118.00 R	224+66.80	C/L Spout Springs Road
	70.74	S 82°34'36.6" W	
4501	48.32 R	224+78.98	C/L Spout Springs Road

REQD R/W = 3136.43 SF
REQD R/W = 0.072 ACRES
REMAINDER = +/- 2.3 ACRES

PESWT - PAR 19/SV352 EASM'T. FOR CONST. AND MAINT. OF SLOPES AND UTILITIES DE20052

PNT	OFFSET/ DIST	STATION/ BEARING	ALIGNMENT
DE20125	55.00 R	225+24.00	C/L Spout Springs Road
	202.74	N 17°20'06.4" W	
DE21263	55.00 R	227+26.74	C/L Spout Springs Road
	15.00	N 72°37'23.6" E	
DE20127	70.00 R	227+26.75	C/L Spout Springs Road
	211.89	S 15°58'56.9" E	
DE20128	65.00 R	225+14.92	C/L Spout Springs Road
	13.50	N 65°06'00.6" W	
DE20125	55.00 R	225+24.00	C/L Spout Springs Road

REQD EASMT = 2602.24 SF
REQD EASMT = 0.060 ACRES

20 7348 SPOUT SPRINGS ROAD OWNER I, LLC ET AL
SEE SHEET 14

REQD R/W - PAR 20/SV338 REQ'D R/W DE20053

PNT	OFFSET/ DIST	STATION/ BEARING	ALIGNMENT
4558	51.85 L	227+11.14	C/L Spout Springs Road
	205.15	S 17°22'36.4" E	
4565	51.70 L	225+05.99	C/L Spout Springs Road

ARC LENGTH = 17.13
CHORD BEAR = S 63°03'30.7" W
LNTH CHORD = 16.89
RADIUS = 29.50
DEGREE = 194°13'22.7"

4574	68.36 L	225+03.17	C/L Spout Springs Road
	1.65	S 79°11'33.0" W	
DE20121	70.00 L	225+03.36	C/L Spout Springs Road
	207.82	N 17°20'06.4" W	
DE20129	70.00 L	227+11.18	C/L Spout Springs Road
	18.15	N 72°47'24.0" E	
4558	51.85 L	227+11.14	C/L Spout Springs Road

REQD R/W = 3781.14 SF
REQD R/W = 0.087 ACRES
REMAINDER = +/- 0.93 ACRES

PESWT - PAR 20/SV338 EASM'T. FOR CONST. AND MAINT. OF SLOPES AND UTILITIES DE20054

PNT	OFFSET/ DIST	STATION/ BEARING	ALIGNMENT
DE20129	70.00 L	227+11.18	C/L Spout Springs Road
	207.82	S 17°20'06.4" E	
DE20121	70.00 L	225+03.36	C/L Spout Springs Road
	15.10	S 79°11'33.0" W	
DE20130	85.00 L	225+05.07	C/L Spout Springs Road
	206.14	N 17°20'06.4" W	
DE20131	85.00 L	227+11.21	C/L Spout Springs Road
	15.00	N 72°47'24.0" E	
DE20129	70.00 L	227+11.18	C/L Spout Springs Road

REQD EASMT = 3104.68 SF
REQD EASMT = 0.071 ACRES

21 WES GA-2, LLC
SEE SHEET 14

REQD R/W - PAR 21/SV337 REQ'D R/W DE20055

PNT	OFFSET/ DIST	STATION/ BEARING	ALIGNMENT
4557	51.90 L	227+76.92	C/L Spout Springs Road
	65.78	S 17°22'36.4" E	
4558	51.85 L	227+11.14	C/L Spout Springs Road
	18.15	S 72°47'24.0" W	
DE20129	70.00 L	227+11.18	C/L Spout Springs Road
	65.73	N 17°20'06.4" W	
DE20132	70.00 L	227+76.90	C/L Spout Springs Road
	18.10	N 72°37'23.6" E	
4557	51.90 L	227+76.92	C/L Spout Springs Road

REQD R/W = 1191.89 SF
REQD R/W = 0.027 ACRES
REMAINDER = +/- 0.99 ACRES

PESWT - PAR 21/SV337 EASM'T. FOR CONST. AND MAINT. OF SLOPES AND UTILITIES DE20056

PNT	OFFSET/ DIST	STATION/ BEARING	ALIGNMENT
4549	72.01 L	229+31.77	C/L Spout Springs Road
	154.87	S 17°22'36.3" E	
4556	71.90 L	227+76.90	C/L Spout Springs Road
	1.90	N 72°37'23.6" E	
DE20132	70.00 L	227+76.90	C/L Spout Springs Road
	65.73	S 17°20'06.4" E	
DE20129	70.00 L	227+11.18	C/L Spout Springs Road
	15.00	S 72°47'24.0" W	
DE20131	85.00 L	227+11.21	C/L Spout Springs Road
	190.69	N 17°20'06.4" W	
DE20133	85.00 L	229+01.90	C/L Spout Springs Road
	93.14	N 85°16'12.5" W	
DE20134	171.31 L	229+36.88	C/L Spout Springs Road

ARC LENGTH = 40.02
CHORD BEAR = N 79°29'19.8" E
LNTH CHORD = 39.92
RADIUS = 165.15
DEGREE = 34°41'35.4"

4580	131.68 L	229+32.14	C/L Spout Springs Road
	59.67	N 73°01'03.0" E	
4549	72.01 L	229+31.77	C/L Spout Springs Road

REQD EASMT = 4162.25 SF
REQD EASMT = 0.096 ACRES

22 SPOUT SPRINGS ASSOCIATES LLC
SEE SHEET 14

PESWT - PAR 22/SV351 EASM'T. FOR CONST. AND MAINT. OF SLOPES AND UTILITIES DE20057

PNT	OFFSET/ DIST	STATION/ BEARING	ALIGNMENT
DE20135	88.00 R	229+15.00	C/L Spout Springs Road
	35.19	N 17°22'36.4" W	
4489	87.98 R	229+50.19	C/L Spout Springs Road
	16.07	N 72°22'42.6" E	
4516	104.05 R	229+50.27	C/L Spout Springs Road
	51.07	N 68°51'54.7" E	
DE20136	155.00 R	229+53.65	C/L Spout Springs Road
	18.65	S 17°20'06.4" E	
DE20137	155.00 R	229+35.00	C/L Spout Springs Road
	69.92	S 56°02'36.9" W	
DE20135	88.00 R	229+15.00	C/L Spout Springs Road

REQD EASMT = 1778.74 SF
REQD EASMT = 0.041 ACRES
REMAINDER = +/- 1.6 ACRES

STV 100 Years
3700 CRESTWOOD PARKWAY NW, SUITE 800
DULUTH, GEORGIA 30096
PHONE: (770)452-0797 FAX: (770)936-9171

DATE	REVISIONS	DATE	REVISIONS

HALL COUNTY
DEPARTMENT OF PUBLIC WORKS

RIGHT OF WAY DATA

PROJECT NO: 0015280
COUNTY: HALL
LAND LOT NO: N/A
LAND DISTRICT: N/A
GMD: 1270 / 392 / 1419
DATE 9/28/22 SH 15 OF 46

23 R. E. A. D. LLC
SEE SHEET 14

PESWT - PAR 23/SV446 EASW'T. FOR CONST. AND MAINT. OF SLOPES AND UTILITIES DE20058

PNT	OFFSET/ DIST	STATION/ BEARING	ALIGNMENT
4559	72.06 L	230+01.77	C/L Spout Springs Road
	70.00	S 17°22'36.4" E	
4549	72.01 L	229+31.77	C/L Spout Springs Road
	59.67	S 73°01'03.0" W	
4580	131.68 L	229+32.14	C/L Spout Springs Road

ARC LENGTH = 40.02
CHORD BEAR = S 79°29'19.8" W
LNTH CHORD = 39.92
RADIUS = 165.15
DEGREE = 34°41'35.4"

DE20134	171.31 L	229+36.88	C/L Spout Springs Road
	66.10	N 9°14'07.3" W	
DE20138	162.00 L	230+02.33	C/L Spout Springs Road
	89.94	N 73°01'03.0" E	
4559	72.06 L	230+01.77	C/L Spout Springs Road

REQD EASWT = 6587.50 SF
REQD EASWT = 0.151 ACRES
REMAINDER = +/- 2.1 ACRES

24 ELITE TIRE AND AUTO SERVICE LLC
SEE SHEET 14

REQD R/W - PAR 24/SV350 REQ'D R/W DE20059

PNT	OFFSET/ DIST	STATION/ BEARING	ALIGNMENT
4492	47.53 R	230+80.79	C/L Spout Springs Road

ARC LENGTH = 338.83
CHORD BEAR = N 10°25'44.6" W
LNTH CHORD = 338.00
RADIUS = 1397.13
DEGREE = 4°06'03.4"

4493	41.42 R	234+29.85	C/L Spout Springs Road
	5.00	N 86°39'55.7" E	
4494	46.42 R	234+29.91	C/L Spout Springs Road

ARC LENGTH = 64.19
CHORD BEAR = N 2°09'39.3" W
LNTH CHORD = 64.19
RADIUS = 1392.13
DEGREE = 4°06'56.5"

4495	45.65 R	234+96.13	C/L Spout Springs Road
	42.23	S 44°50'21.4" E	
DE10028	75.00 R	234+64.50	C/L Spout Springs Road

ARC LENGTH = 0.00
CHORD BEAR = N 44°50'42.1" W
LNTH CHORD = 0.00
RADIUS = 1425.00
DEGREE = 4°01'14.7"

DE20139	75.00 R	234+64.50	C/L Spout Springs Road

ARC LENGTH = 189.52
CHORD BEAR = S 5°13'17.7" E
LNTH CHORD = 189.38
RADIUS = 1425.00
DEGREE = 4°01'14.7"

DE20140	75.00 R	232+65.00	C/L Spout Springs Road
	65.31	S 7°33'14.8" W	
DE20141	55.00 R	232+00.00	C/L Spout Springs Road
	114.45	S 18°47'30.5" E	
DE20142	65.00 R	230+81.21	C/L Spout Springs Road
	17.48	S 72°37'23.7" W	
4492	47.53 R	230+80.79	C/L Spout Springs Road

REQD R/W = 9501.86 SF
REQD R/W = 0.218 ACRES
REMAINDER = +/- 1.8 ACRES

24 ELITE TIRE AND AUTO SERVICE LLC
SEE SHEET 14

PESWT - PAR 24/SV350-TRACT 1 EASW'T. FOR CONST. AND MAINT. OF SLOPES AND UTILITIES DE20060

PNT	OFFSET/ DIST	STATION/ BEARING	ALIGNMENT
4490	87.95 R	229+92.68	C/L Spout Springs Road
	42.32	N 17°22'36.4" W	
DE20148	87.92 R	230+35.00	C/L Spout Springs Road
	75.67	S 79°47'02.0" E	
DE20149	155.00 R	230+00.00	C/L Spout Springs Road
	18.74	S 17°20'06.4" E	
DE20150	155.00 R	229+81.27	C/L Spout Springs Road
	68.02	S 82°19'22.7" W	
4490	87.95 R	229+92.68	C/L Spout Springs Road

REQD EASMT = 2047.36 SF
REQD EASMT = 0.047 ACRES

PESWT - PAR 24/SV350-TRACT 2 EASW'T. FOR CONST. AND MAINT. OF SLOPES AND UTILITIES DE20061

PNT	OFFSET/ DIST	STATION/ BEARING	ALIGNMENT
4491	87.52 R	230+81.76	C/L Spout Springs Road
	22.52	S 72°37'23.7" W	
DE20142	65.00 R	230+81.21	C/L Spout Springs Road
	114.45	N 18°47'30.5" W	
DE20141	55.00 R	232+00.00	C/L Spout Springs Road
	65.31	N 7°33'14.8" E	
DE20140	75.00 R	232+65.00	C/L Spout Springs Road

ARC LENGTH = 189.52
CHORD BEAR = N 5°13'17.7" W
LNTH CHORD = 189.38
RADIUS = 1425.00
DEGREE = 4°01'14.7"

DE20139	75.00 R	234+64.50	C/L Spout Springs Road
	68.04	S 44°50'21.4" E	
DE20143	120.89 R	234+10.74	C/L Spout Springs Road
	9.91	S 1°27'24.2" W	
DE20144	120.00 R	234+00.00	C/L Spout Springs Road
	20.00	S 86°07'30.2" W	
DE20145	100.00 R	234+00.00	C/L Spout Springs Road
	298.05	S 7°33'57.4" E	
4491	87.52 R	230+81.76	C/L Spout Springs Road

REQD EASMT = 11062.68 SF
REQD EASMT = 0.254 ACRES

25 SPOUT SPRINGS REAL ESTATE, LLC
SEE SHEET 14

REQD R/W - PAR 25/SV336 REQ'D R/W DE20062

PNT	OFFSET/ DIST	STATION/ BEARING	ALIGNMENT
4563	56.77 L	233+03.84	C/L Spout Springs Road

ARC LENGTH = 132.77
CHORD BEAR = S 10°58'50.8" E
LNTH CHORD = 132.73
RADIUS = 1497.13
DEGREE = 3°49'37.3"

4562	54.48 L	231+75.84	C/L Spout Springs Road
	15.53	S 76°02'54.0" W	
DE20152	70.00 L	231+75.45	C/L Spout Springs Road

ARC LENGTH = 133.93
CHORD BEAR = N 10°00'30.8" W
LNTH CHORD = 133.89
RADIUS = 1570.00
DEGREE = 3°38'57.9"

DE20153	70.00 L	233+03.41	C/L Spout Springs Road
	13.24	N 80°29'09.0" E	
4563	56.77 L	233+03.84	C/L Spout Springs Road

REQD R/W = 1912.54 SF
REQD R/W = 0.044 ACRES
REMAINDER = +/- 1.5 ACRES

PESWT - PAR 25/SV336 EASW'T. FOR CONST. AND MAINT. OF SLOPES AND UTILITIES DE20063

PNT	OFFSET/ DIST	STATION/ BEARING	ALIGNMENT
DE20153	70.00 L	233+03.41	C/L Spout Springs Road

ARC LENGTH = 133.93
CHORD BEAR = S 10°00'30.8" E
LNTH CHORD = 133.89
RADIUS = 1570.00
DEGREE = 3°38'57.9"

DE20152	70.00 L	231+75.45	C/L Spout Springs Road
	4.47	S 76°02'54.0" W	
4561	74.47 L	231+75.33	C/L Spout Springs Road

ARC LENGTH = 101.94
CHORD BEAR = S 15°27'06.9" E
LNTH CHORD = 101.92
RADIUS = 1517.13
DEGREE = 3°46'35.7"

4560	72.44 L	230+78.18	C/L Spout Springs Road
	77.88	S 17°22'36.3" E	
4559	72.06 L	230+01.77	C/L Spout Springs Road
	89.94	S 73°01'03.0" W	
DE20138	162.00 L	230+02.33	C/L Spout Springs Road
	69.04	N 58°41'15.5" E	
DE20154	95.00 L	230+19.00	C/L Spout Springs Road
	84.34	N 17°21'21.3" W	
DE20155	96.00 L	231+00.00	C/L Spout Springs Road
	188.22	N 11°57'09.1" W	
DE20156	96.00 L	232+77.00	C/L Spout Springs Road
	27.40	N 16°28'50.9" W	
DE20157	100.00 L	233+02.45	C/L Spout Springs Road
	30.02	N 80°29'09.0" E	
DE20153	70.00 L	233+03.41	C/L Spout Springs Road

REQD EASMT = 7872.34 SF
REQD EASMT = 0.181 ACRES

DWESWT - PAR 25/SV336 REQ'D DRWY. EASW'T. DE20064

PNT	OFFSET/	STATION/	ALIGNMENT
DE20157	100.00 L	233+02.45	C/L Spout Springs Road
DE20156	96.00 L	232+77.00	C/L Spout Springs Road
DE20158	130.00 L	232+77.00	C/L Spout Springs Road
DE20159	130.00 L	233+01.53	C/L Spout Springs Road
DE20157	100.00 L	233+02.45	C/L Spout Springs Road

26 THE ALLGOOD COMPANY, LLC
SEE SHEET 14

REQD R/W - PAR 26/SV335 REQ'D R/W DE20065

PNT	OFFSET/ DIST	STATION/ BEARING	ALIGNMENT
4564	59.37 L	234+97.21	C/L Spout Springs Road

ARC LENGTH = 200.89
CHORD BEAR = S 4°35'46.3" E
LNTH CHORD = 200.74
RADIUS = 1497.13
DEGREE = 3°49'37.3"

4563	56.77 L	233+03.84	C/L Spout Springs Road
	13.24	S 80°29'09.0" W	
DE20153	70.00 L	233+03.41	C/L Spout Springs Road

ARC LENGTH = 201.10
CHORD BEAR = N 3°53'42.8" W
LNTH CHORD = 200.96
RADIUS = 1570.00
DEGREE = 3°38'57.9"

DE20160	70.00 L	234+95.54	C/L Spout Springs Road
	10.77	N 80°29'09.0" E	
4564	59.37 L	234+97.21	C/L Spout Springs Road

REQD R/W = 2381.44 SF
REQD R/W = 0.055 ACRES
REMAINDER = +/- 1.1 ACRES

PESWT - PAR 26/SV335 EASW'T. FOR CONST. AND MAINT. OF SLOPES AND UTILITIES DE20066

PNT	OFFSET/ DIST	STATION/ BEARING	ALIGNMENT
DE20160	70.00 L	234+95.54	C/L Spout Springs Road

ARC LENGTH = 201.10
CHORD BEAR = S 3°53'42.8" E
LNTH CHORD = 200.96
RADIUS = 1570.00
DEGREE = 3°38'57.9"

DE20153	70.00 L	233+03.41	C/L Spout Springs Road
	30.02	S 80°29'09.0" W	
DE20157	100.00 L	233+02.45	C/L Spout Springs Road
	53.12	N 23°05'34.2" W	
DE20161	115.00 L	233+50.00	C/L Spout Springs Road
	149.93	N 1°12'45.5" W	
DE20162	110.00 L	234+89.45	C/L Spout Springs Road
	40.52	N 80°29'09.0" E	
DE20160	70.00 L	234+95.54	C/L Spout Springs Road

REQD EASMT = 8106.13 SF
REQD EASMT = 0.186 ACRES

DWESWT - PAR 26/SV335 REQ'D DRWY. EASW'T. DE20067

PNT	OFFSET/	STATION/	ALIGNMENT
DE20163	106.88 L	233+25.00	C/L Spout Springs Road
DE20157	100.00 L	233+02.45	C/L Spout Springs Road
DE20159	130.00 L	233+01.53	C/L Spout Springs Road
DE20164	130.00 L	233+25.00	C/L Spout Springs Road
DE20163	106.88 L	233+25.00	C/L Spout Springs Road

27 CENTURY COMMUNITIES OF GEORGIA, LLC
SEE SHEETS 14, 18

REQD R/W - PAR 27/SV305 REQ'D R/W DE20068

PNT	OFFSET/ DIST	STATION/ BEARING	ALIGNMENT
4495	45.65 R	234+96.13	C/L Spout Springs Road

ARC LENGTH = 82.15
CHORD BEAR = N 0°51'02.3" E
LNTH CHORD = 82.14
RADIUS = 1392.13
DEGREE = 4°06'56.5"

4606	44.84 R	235+80.83	C/L Spout Springs Road
	5.00	N 87°27'31.6" W	
4607	39.84 R	235+80.78	C/L Spout Springs Road

ARC LENGTH = 381.22
CHORD BEAR = N 10°21'28.6" E
LNTH CHORD = 380.03
RADIUS = 1397.13
DEGREE = 4°06'03.4"

4605	38.85 R	239+72.16	C/L Spout Springs Road
	494.67	N 18°10'28.8" E	
4604	24.69 R	244+67.92	C/L Spout Springs Road
	70.07	N 78°58'31.9" E	
DE20167	85.00 R	245+02.53	C/L Spout Springs Road

ARC LENGTH = 24.83
CHORD BEAR = S 19°25'55.9" W
LNTH CHORD = 24.83
RADIUS = 1485.00
DEGREE = 3°51'29.9"

DE20168	85.00 R	244+79.12	C/L Spout Springs Road
	259.12	S 19°54'42.1" W	
DE20170	85.00 R	242+20.00	C/L Spout Springs Road
	70.00	S 70°05'17.9" E	
DE20171	155.00 R	242+20.00	C/L Spout Springs Road
	197.27	S 19°54'42.1" W	
DE20172	155.00 R	240+22.73	C/L Spout Springs Road

ARC LENGTH = 2.45
CHORD BEAR = S 19°51'34.1" W
LNTH CHORD = 2.45
RADIUS = 1345.00
DEGREE = 4°15'35.7"

DE20173	155.00 R	240+20.00	C/L Spout Springs Road
	94.74	S 76°20'48.8" W	
DE20174	75.00 R	239+65.00	C/L Spout Springs Road

ARC LENGTH = 475.48
CHORD BEAR = S 8°08'50.8" W
LNTH CHORD = 473.28
RADIUS = 1425.00
DEGREE = 4°01'14.7"

DE20139	75.00 R	234+64.49	C/L Spout Springs Road
	42.23	N 44°50'21.4" W	
4495	45.65 R	234+96.13	C/L Spout Springs Road

REQD R/W = 59235.98 SF
REQD R/W = 1.360 ACRES
REMAINDER = +/- 38 ACRES

PESWT - PAR 27/SV305 EASW'T. FOR CONST. AND MAINT. OF SLOPES AND UTILITIES DE20069

PNT	OFFSET/ DIST	STATION/ BEARING	ALIGNMENT
DE20139	75.00 R	234+64.49	C/L Spout Springs Road

ARC LENGTH = 475.48
CHORD BEAR = N 8°08'50.8" E
LNTH CHORD = 473.28
RADIUS = 1425.00
DEGREE = 4°01'14.7"

DE20174	75.00 R	239+65.00	C/L Spout Springs Road
	23.48	N 76°20'48.8" E	
DE20177	95.00 R	239+78.05	C/L Spout Springs Road
	166.38	S 11°21'52.8" W	
DE20178	105.00 R	238+00.00	C/L Spout Springs Road
	359.29	S 1°27'24.2" W	
DE20143	120.89 R	234+10.74	C/L Spout Springs Road
	68.04	N 44°50'21.4" W	
DE20139	75.00 R	234+64.49	C/L Spout Springs Road

REQD EASWT = 19807.85 SF
REQD EASWT = 0.455 ACRES

STV 100 Years
3700 CRESTWOOD PARKWAY NW, SUITE 800
DULUTH, GEORGIA 30096
PHONE: (770)452-0797 FAX: (770)936-9171

DATE	REVISIONS	DATE	REVISIONS

HALL COUNTY
DEPARTMENT OF PUBLIC WORKS

RIGHT OF WAY DATA

PROJECT NO: 0015280
COUNTY: HALL
LAND LOT NO: N/A
LAND DISTRICT: N/A
GMD: 1270 / 392 / 1419
DATE 9/28/22 SH 16 OF 46

28 YELLOW LOBSTER 888 GA-6, LLC
SEE SHEET 14

REQD R/W - PAR 28/SV332 REQ'D R/W DE20070

PNT	OFFSET/ DIST	STATION/ BEARING	ALIGNMENT
4548	60.20 L	235+84.60	C/L Spout Springs Road
ARC LENGTH = 90.88			
CHORD BEAR = S 0°59'12.4" W			
LNTH CHORD = 90.86			
RADIUS = 1497.13			
DEGREE = 3°49'37.3"			
4564	59.37 L	234+97.21	C/L Spout Springs Road
	10.77	S 80°29'09.0" W	
DE20160	70.00 L	234+95.54	C/L Spout Springs Road
	93.43	N 7°29'44.3" E	
4548	60.20 L	235+84.60	C/L Spout Springs Road
REQD R/W = 439.39 SF			
REQD R/W = 0.010 ACRES			
REMAINDER = +/- 1.2 ACRES			

PESMT - PAR 28/SV332 EASM'T. FOR CONST. AND MAINT. OF SLOPES AND UTILITIES DE20071

PNT	OFFSET/ DIST	STATION/ BEARING	ALIGNMENT
4548	60.20 L	235+84.60	C/L Spout Springs Road
	93.43	S 7°29'44.3" W	
DE20160	70.00 L	234+95.54	C/L Spout Springs Road
	40.52	S 80°29'09.0" W	
DE20162	110.00 L	234+89.44	C/L Spout Springs Road
	97.16	N 4°13'10.2" E	
DE20179	105.00 L	235+80.00	C/L Spout Springs Road
	18.45	N 51°10'49.8" W	
DE20180	120.00 L	235+90.00	C/L Spout Springs Road
	97.89	N 29°22'50.0" W	
DE20181	175.00 L	236+63.75	C/L Spout Springs Road
	13.42	N 80°25'36.0" E	
4550	162.09 L	236+67.04	C/L Spout Springs Road
	134.96	S 44°15'04.2" E	
4548	60.20 L	235+84.60	C/L Spout Springs Road
REQD EASMT = 7316.78 SF			
REQD EASMT = 0.168 ACRES			

29 Beverly T. & Thomas L. Logan
SEE SHEET 14

PESMT - PAR 29/SV450 EASM'T. FOR CONST. AND MAINT. OF SLOPES AND UTILITIES DE20072

PNT	OFFSET/ DIST	STATION/ BEARING	ALIGNMENT
DE20182	187.34 L	236+85.40	C/L Spout Springs Road
	32.52	S 44°15'04.3" E	
4550	162.09 L	236+67.04	C/L Spout Springs Road
	13.42	S 80°25'36.0" W	
DE20181	175.00 L	236+63.75	C/L Spout Springs Road
	27.22	N 20°20'39.0" W	
DE20182	187.34 L	236+85.40	C/L Spout Springs Road
REQD EASMT = 179.40 SF			
REQD EASMT = 0.004 ACRES			
REMAINDER = +/- 0.55 ACRES			

30 ADNAN OKANOVIC
SEE SHEETS 14, 18

PESMT - PAR 30/SV329 EASM'T. FOR CONST. AND MAINT. OF SLOPES AND UTILITIES DE20073

PNT	OFFSET/ DIST	STATION/ BEARING	ALIGNMENT
4547	61.25 L	237+88.38	C/L Spout Springs Road
ARC LENGTH = 212.04			
CHORD BEAR = S 6°46'59.6" W			
LNTH CHORD = 211.87			
RADIUS = 1497.13			
DEGREE = 3°49'37.3"			
4548	60.20 L	235+84.60	C/L Spout Springs Road
	60.14	N 44°15'04.2" W	
DE20183	105.00 L	236+22.63	C/L Spout Springs Road
	194.30	N 9°34'30.1" E	
DE20184	100.00 L	238+04.55	C/L Spout Springs Road
	42.33	S 54°59'32.5" E	
4547	61.25 L	237+88.38	C/L Spout Springs Road
REQD EASMT = 8136.91 SF			
REQD EASMT = 0.187 ACRES			
REMAINDER = +/- 1.9 ACRES			

DWESMT - PAR 30/SV329 - TRACT 1 REQ'D DRWY. EASM'T. DE20074

PNT	OFFSET/	STATION/	ALIGNMENT
DE20185	101.14 L	236+75.00	C/L Spout Springs Road
DE20183	105.00 L	236+22.63	C/L Spout Springs Road
4550	162.09 L	236+67.04	C/L Spout Springs Road
DE20182	187.34 L	236+85.40	C/L Spout Springs Road
DE20186	173.00 L	237+00.00	C/L Spout Springs Road
DE20185	101.14 L	236+75.00	C/L Spout Springs Road

DWESMT - PAR 30/SV329 - TRACT 2 REQ'D DRWY. EASM'T. DE20595

PNT	OFFSET/	STATION/	ALIGNMENT
DE20184	100.00 L	238+04.55	C/L Spout Springs Road
DE20187	99.02 L	237+50.00	C/L Spout Springs Road
DE20188	111.00 L	237+54.00	C/L Spout Springs Road
DE20189	112.00 L	238+09.38	C/L Spout Springs Road
DE20184	100.00 L	238+04.55	C/L Spout Springs Road

31 MICHAEL ROS DUBOSE
SEE SHEETS 14, 18

REQD R/W - PAR 31/SV328 REQ'D R/W DE20075

PNT	OFFSET/ DIST	STATION/ BEARING	ALIGNMENT
4544	61.14 L	239+79.35	C/L Spout Springs Road
	7.14	S 18°10'28.9" W	
1249	61.15 L	239+72.49	C/L Spout Springs Road
ARC LENGTH = 75.45			
CHORD BEAR = S 16°43'51.4" W			
LNTH CHORD = 75.44			
RADIUS = 1497.13			
DEGREE = 3°49'37.3"			
DE20190	61.31 L	239+00.00	C/L Spout Springs Road
	84.26	N 10°50'19.5" E	
DE20192	70.00 L	239+80.31	C/L Spout Springs Road
	8.92	S 65°18'44.5" E	
4544	61.14 L	239+79.35	C/L Spout Springs Road
REQD R/W = 334.00 SF			
REQD R/W = 0.008 ACRES			
REMAINDER = +/- 2.3 ACRES			

PESMT - PAR 31/SV328 EASM'T. FOR CONST. AND MAINT. OF SLOPES AND UTILITIES DE20076

PNT	OFFSET/ DIST	STATION/ BEARING	ALIGNMENT
DE20192	70.00 L	239+80.31	C/L Spout Springs Road
	84.26	S 10°50'19.5" W	
DE20190	61.31 L	239+00.00	C/L Spout Springs Road
ARC LENGTH = 116.19			
CHORD BEAR = S 13°03'50.2" W			
LNTH CHORD = 116.16			
RADIUS = 1497.13			
DEGREE = 3°49'37.3"			
4547	61.25 L	237+88.38	C/L Spout Springs Road
	42.33	N 54°59'32.5" W	
DE20184	100.00 L	238+04.55	C/L Spout Springs Road
	190.72	N 14°59'40.2" E	
DE20193	100.00 L	239+83.46	C/L Spout Springs Road
	30.18	S 65°18'44.5" E	
DE20192	70.00 L	239+80.31	C/L Spout Springs Road
REQD EASMT = 6847.35 SF			
REQD EASMT = 0.157 ACRES			

DWESMT - PAR 31/SV328 REQ'D DRWY. EASM'T. DE20077

PNT	OFFSET/	STATION/	ALIGNMENT
DE20194	97.84 L	238+50.00	C/L Spout Springs Road
DE20184	100.00 L	238+04.55	C/L Spout Springs Road
DE20189	112.00 L	238+09.38	C/L Spout Springs Road
DE20195	110.00 L	238+50.00	C/L Spout Springs Road
DE20194	97.84 L	238+50.00	C/L Spout Springs Road

STV 100 Years
3700 CRESTWOOD PARKWAY NW, SUITE 800
DULUTH, GEORGIA 30096
PHONE: (770)452-0797 FAX: (770)936-9171

DATE	REVISIONS	DATE	REVISIONS

HALL COUNTY
DEPARTMENT OF PUBLIC WORKS

RIGHT OF WAY DATA

PROJECT NO: 0015280
COUNTY: HALL
LAND LOT NO: N/A
LAND DISTRICT: N/A
GMD: 1270 / 392 / 1419
DATE 9/28/22 SH 17 OF 46

5/24/2023	GPLOT-V8	0015280_60-18.dgn	SHEET NO.	TOTAL SHEETS
GoCC	gplotborder-V81-P0.tbl	GAWPLN	18	46

	BEGIN/END	STATION	OFFSET	GUARDRAIL TYPE	ANCHOR TYPE
12	BEGIN	238+22.89	67.42' LT	W	N/A
13	N/A	238+36.67	50.50' LT	W	I (R 15')
14	END	241+00.00	50.00' LT	W	12
15	BEGIN	246+15.19	44.80' RT	W	12
16	N/A	247+48.41	45.00' RT	W	I (R 15')
17	END	247+62.68	61.53' RT	W	N/A
18	BEGIN	248+31.24	45.00' RT	W	12
19	END	249+52.41	45.88' RT	W	I
20	BEGIN	251+50.89	54.00' LT	W	I

SPOUT SPRINGS RD

Curve° 2
PI Sta: 235+53.10
N: 1496359.9100
E: 2384674.5400
DELTA: 37°14'48.5" (RT)
D: 03°49'10.99"
T: 505.49
L: 975.12
R: 1500.00
E: 82.88
e: 3.40%

Curve° 3
PI Sta: 252+58.44
N: 1497997.0139
E: 2385267.5410
DELTA: 58°12'20.6" (LT)
D: 04°05'33.20"
T: 779.32
L: 1422.23
R: 1400.00
E: 202.29
e: 3.40%

MEDIAN DESIGN CHANGE-OVER LOCATIONS				
	END	BEGIN	WIDTH	STATION
©	RAISED CONCRETE	BIORETENTION	8'	244+58.16

REFERENCE POINT	NORTHING	EASTING
PT 240+22.73	1496835.1792	2384846.6947
PC 244+79.12	1497264.2814	2385002.1265

STV 100 Years
3700 CRESTWOOD PARKWAY NW, SUITE 800
DULUTH, GEORGIA 30096
PHONE: (770)452-0797 FAX: (770)936-9171

SCALE IN FEET
0 50 100 200

PROPERTY AND EXISTING R/W LINE
REQUIRED R/W LINE
CONSTRUCTION LIMITS
EASEMENT FOR CONSTR & MAINTENANCE OF SLOPES AND UTILITIES
EASEMENT FOR CONSTR OF SLOPES
EASEMENT FOR CONSTR OF DRIVES

BEGIN LIMIT OF ACCESS.....BLA
END LIMIT OF ACCESS.....ELA
LIMIT OF ACCESS
REQ'D R/W & LIMIT OF ACCESS
ORANGE BARRIER FENCE
ESA - ENV. SENSITIVE AREA
(SEE ERIT TABLE)

DATE	REVISIONS		DATE	REVISIONS

HALL COUNTY
DEPARTMENT OF PUBLIC WORKS

RIGHT OF WAY PLANS

PROJECT NO: 0015280
COUNTY: HALL
LAND LOT NO: N/A
LAND DISTRICT: N/A
GMD: 1270 / 1419 / 392
DATE 9/28/22 SH 18 OF 46

32 DENNIS A. DUNCAN AND JANET E. DUNCAN
SEE SHEET 18

REQD R/W - PAR 32/SV327 REQ'D R/W DE20078

PNT	OFFSET/ DIST	STATION/ BEARING	ALIGNMENT
4539	74.01 L	244+23.54	C/L Spout Springs Road
	446.15	S 18°10'28.8" W	
4544	61.14 L	239+79.35	C/L Spout Springs Road
	39.10	N 65°18'44.5" W	
DE20193	100.00 L	239+83.46	C/L Spout Springs Road
	38.98	N 19°06'33.7" E	
DE20196	100.00 L	240+20.00	C/L Spout Springs Road
	81.57	N 30°30'20.6" E	
DE20197	85.00 L	241+00.00	C/L Spout Springs Road
	322.72	N 19°54'42.1" E	
DE20198	85.00 L	244+22.73	C/L Spout Springs Road
	11.02	S 74°18'26.2" E	
4539	74.01 L	244+23.54	C/L Spout Springs Road

REQD R/W = 9070.17 SF
REQD R/W = 0.208 ACRES
REMAINDER = +/- 8.8 ACRES

DWESMT - PAR 32/SV327 REQ'D DRWY. EASM'T. DE20079

PNT	OFFSET/	STATION/	ALIGNMENT
DE20203	85.00 L	242+50.00	C/L Spout Springs Road
DE20322	85.00 L	241+95.00	C/L Spout Springs Road
DE20343	120.00 L	241+95.00	C/L Spout Springs Road
DE20348	120.00 L	242+50.00	C/L Spout Springs Road
DE20203	85.00 L	242+50.00	C/L Spout Springs Road

33 VINCENT BOYD EUBANKS
SEE SHEET 18

REQD R/W - PAR 33/SV326 REQ'D R/W DE20080

PNT	OFFSET/ DIST	STATION/ BEARING	ALIGNMENT
4464	68.63 L	246+71.96	C/L Spout Springs Road
	238.50	S 18°10'28.8" W	
4539	74.01 L	244+23.54	C/L Spout Springs Road
	11.02	N 74°18'26.2" W	
DE20198	85.00 L	244+22.73	C/L Spout Springs Road
	56.40	N 19°54'42.1" E	
DE20204	85.00 L	244+79.12	C/L Spout Springs Road

ARC LENGTH = 182.19
CHORD BEAR = N 15°56'33.3" E
LNTH CHORD = 182.04
RADIUS = 1315.00
DEGREE = 4°21'25.5"

DE20205	85.00 L	246+73.09	C/L Spout Springs Road
	16.40	S 74°17'34.1" E	
4464	68.63 L	246+71.96	C/L Spout Springs Road

REQD R/W = 2529.06 SF
REQD R/W = 0.058 ACRES
REMAINDER = +/- 5.2 ACRES

DWESMT - PAR 33/SV326 REQ'D DRWY. EASM'T. DE20081

PNT	OFFSET/	STATION/	ALIGNMENT
DE20206	85.00 L	245+05.00	C/L Spout Springs Road

ARC LENGTH = 24.31
CHORD BEAR = S 19°22'55.5" W
LNTH CHORD = 24.31
RADIUS = 1315.00
DEGREE = 4°21'25.5"

DE20204	85.00 L	244+79.12	C/L Spout Springs Road
DE20207	85.00 L	244+55.00	C/L Spout Springs Road
DE20208	125.00 L	244+55.00	C/L Spout Springs Road
DE20209	125.00 L	245+05.00	C/L Spout Springs Road
DE20206	85.00 L	245+05.00	C/L Spout Springs Road

34 RONNIE E. CORBIN
SEE SHEET 18

REQD R/W - PAR 34/SV304 REQ'D R/W DE20082

PNT	OFFSET/ DIST	STATION/ BEARING	ALIGNMENT
4604	24.69 R	244+67.93	C/L Spout Springs Road
	205.00	N 18°10'28.8" E	
4603	31.64 R	246+69.13	C/L Spout Springs Road

ARC LENGTH = 63.56
CHORD BEAR = N 16°39'25.9" E
LNTH CHORD = 63.56
RADIUS = 1200.00
DEGREE = 4°46'28.7"

4602	38.05 R	247+30.83	C/L Spout Springs Road
	131.47	N 73°08'31.7" E	
DE20210	156.84 R	247+83.54	C/L Spout Springs Road
	31.98	S 26°39'39.7" E	
DE20211	175.00 R	247+60.00	C/L Spout Springs Road
	82.67	S 67°04'50.9" W	
DE20212	105.00 R	247+20.00	C/L Spout Springs Road

ARC LENGTH = 222.27
CHORD BEAR = S 14°17'04.3" W
LNTH CHORD = 222.07
RADIUS = 1505.00
DEGREE = 3°48'25.3"

DE20213	105.00 R	245+13.24	C/L Spout Springs Road
	93.11	S 78°58'32.7" W	
4604	24.69 R	244+67.93	C/L Spout Springs Road

REQD R/W = 22842.64 SF
REQD R/W = 0.524 ACRES
REMAINDER = +/- 9.9 ACRES

PESMT - PAR 34/SV304 EASM'T. FOR CONST. AND MAINT. OF SLOPES AND UTILITIES DE20083

PNT	OFFSET/ DIST	STATION/ BEARING	ALIGNMENT
DE20211	175.00 R	247+60.00	C/L Spout Springs Road
	31.98	N 26°39'39.7" W	
DE20210	156.84 R	247+83.54	C/L Spout Springs Road
	52.68	N 73°08'31.7" E	
DE20214	205.00 R	248+02.46	C/L Spout Springs Road
	56.79	S 39°26'02.6" W	
DE20211	175.00 R	247+60.00	C/L Spout Springs Road

REQD EASMT = 830.15 SF
REQD EASMT = 0.019 ACRES

DWESMT - PAR 34/SV304 REQ'D DRWY. EASM'T. DE20084

PNT	OFFSET/	STATION/	ALIGNMENT
DE20213	105.00 R	245+13.24	C/L Spout Springs Road

ARC LENGTH = 125.52
CHORD BEAR = N 16°07'34.1" E
LNTH CHORD = 125.49
RADIUS = 1505.00
DEGREE = 3°48'25.3"

DE21373	105.00 R	246+30.00	C/L Spout Springs Road
DE20216	175.00 R	246+50.00	C/L Spout Springs Road
DE20217	195.00 R	246+00.00	C/L Spout Springs Road
DE20213	105.00 R	245+13.24	C/L Spout Springs Road

35 PATRICK SCOTT O'DONNELL AND LISA GARMAN O'DONNELL
SEE SHEET 18

REQD R/W - PAR 35/SV325 REQ'D R/W DE20085

PNT	OFFSET/ DIST	STATION/ BEARING	ALIGNMENT
4535	58.04 L	247+76.14	C/L Spout Springs Road

ARC LENGTH = 92.16
CHORD BEAR = S 15°46'27.9" W
LNTH CHORD = 92.14
RADIUS = 1100.00
DEGREE = 5°12'31.3"

4534	67.76 L	246+80.19	C/L Spout Springs Road
	7.87	S 18°10'28.7" W	
4464	68.63 L	246+71.96	C/L Spout Springs Road
	16.40	N 74°17'34.1" W	
DE20205	85.00 L	246+73.09	C/L Spout Springs Road

ARC LENGTH = 99.58
CHORD BEAR = N 9°48'14.6" E
LNTH CHORD = 99.56
RADIUS = 1315.00
DEGREE = 4°21'25.5"

DE20218	85.00 L	247+79.11	C/L Spout Springs Road
	27.11	S 76°20'21.0" E	
4535	58.04 L	247+76.14	C/L Spout Springs Road

REQD R/W = 2178.47 SF
REQD R/W = 0.050 ACRES
REMAINDER = +/- 1.1 ACRES

DWESMT - PAR 35/SV325 REQ'D DRWY. EASM'T. DE20086

PNT	OFFSET/	STATION/	ALIGNMENT
DE20218	85.00 L	247+79.11	C/L Spout Springs Road

ARC LENGTH = 27.34
CHORD BEAR = S 8°13'48.6" W
LNTH CHORD = 27.34
RADIUS = 1315.00
DEGREE = 4°21'25.5"

DE20219	85.00 L	247+50.00	C/L Spout Springs Road
DE20220	110.00 L	247+50.00	C/L Spout Springs Road
DE20221	110.00 L	247+81.97	C/L Spout Springs Road
DE20218	85.00 L	247+79.11	C/L Spout Springs Road

36 ROBERT G. STOVALL AND SHARON V. STOVALL
SEE SHEET 18

REQD R/W - PAR 36/SV303 REQ'D R/W DE20087

PNT	OFFSET/ DIST	STATION/ BEARING	ALIGNMENT
4602	38.05 R	247+30.83	C/L Spout Springs Road

ARC LENGTH = 321.07
CHORD BEAR = N 7°28'29.2" E
LNTH CHORD = 320.11
RADIUS = 1200.00
DEGREE = 4°46'28.7"

4601	61.56 R	250+39.75	C/L Spout Springs Road
	85.04	N 72°10'58.7" E	
DE20222	143.93 R	250+59.43	C/L Spout Springs Road
	157.64	S 26°44'49.9" W	
DE20223	70.00 R	249+30.00	C/L Spout Springs Road

ARC LENGTH = 84.00
CHORD BEAR = S 3°05'46.3" W
LNTH CHORD = 83.99
RADIUS = 1470.00
DEGREE = 3°53'51.6"

DE20224	70.00 R	248+50.00	C/L Spout Springs Road
	40.00	S 85°15'58.6" E	
DE20225	110.00 R	248+50.00	C/L Spout Springs Road
	86.55	S 26°39'39.7" E	
DE20210	156.84 R	247+83.54	C/L Spout Springs Road
	131.47	S 73°08'31.7" W	
4602	38.05 R	247+30.83	C/L Spout Springs Road

REQD R/W = 16255.38 SF
REQD R/W = 0.373 ACRES
REMAINDER = +/- 6.6 ACRES

DWESMT - PAR 36/SV303 REQ'D DRWY. EASM'T. DE20088

PNT	OFFSET/	STATION/	ALIGNMENT
DE20210	156.84 R	247+83.54	C/L Spout Springs Road
DE20225	110.00 R	248+50.00	C/L Spout Springs Road
DE20226	195.00 R	248+40.00	C/L Spout Springs Road
DE20214	205.00 R	248+02.46	C/L Spout Springs Road
DE20210	156.84 R	247+83.54	C/L Spout Springs Road

STV 100 Years
3700 CRESTWOOD PARKWAY NW, SUITE 800
DULUTH, GEORGIA 30096
PHONE: (770)452-0797 FAX: (770)936-9171

DATE	REVISIONS	DATE	REVISIONS

HALL COUNTY
DEPARTMENT OF PUBLIC WORKS

RIGHT OF WAY DATA

PROJECT NO: 0015280
COUNTY: HALL
LAND LOT NO: N/A
LAND DISTRICT: N/A
GMD: 1270 / 1419 / 392
DATE 9/28/22 SH 19 OF 46

37 PATRICK SCOTT O'DONNELL AND LISA GARMAN O'DONNELL
SEE SHEET 18

REQD R/W - PAR 37/SV324 REQ'D R/W DE20089

PNT	OFFSET/ DIST	STATION/ BEARING	ALIGNMENT
4537	48.00 L	248+93.81	C/L Spout Springs Road
ARC LENGTH = 113.68			
CHORD BEAR = S 10°24'48.7" W			
LNTH CHORD = 113.63			
RADIUS = 1100.00			
DEGREE = 5°12'31.3"			
4535	58.04 L	247+76.14	C/L Spout Springs Road
	27.11	N 76°20'21.0" W	
DE20218	85.00 L	247+79.11	C/L Spout Springs Road
ARC LENGTH = 110.81			
CHORD BEAR = N 5°13'14.2" E			
LNTH CHORD = 110.77			
RADIUS = 1315.00			
DEGREE = 4°21'25.5"			
DE20229	85.00 L	248+97.08	C/L Spout Springs Road
	37.13	S 82°19'34.0" E	
4537	48.00 L	248+93.81	C/L Spout Springs Road
REQD R/W = 3617.51 SF			
REQD R/W = 0.083 ACRES			
REMAINDER = +/- 0.92 ACRES			

DWESMT - PAR 37/SV324-TRACT 1 REQ'D DRWY. EASM'T. DE20090

PNT	OFFSET/	STATION/	ALIGNMENT
DE21375	85.00 L	248+00.00	C/L Spout Springs Road
ARC LENGTH = 19.63			
CHORD BEAR = S 7°12'25.2" W			
LNTH CHORD = 19.63			
RADIUS = 1315.00			
DEGREE = 4°21'25.5"			
DE20218	85.00 L	247+79.11	C/L Spout Springs Road
DE20221	110.00 L	247+81.97	C/L Spout Springs Road
DE21374	110.00 L	248+00.00	C/L Spout Springs Road
DE21375	85.00 L	248+00.00	C/L Spout Springs Road

DWESMT - PAR 37/SV324-TRACT 2 REQ'D DRWY. EASM'T. DE20091

PNT	OFFSET/	STATION/	ALIGNMENT
DE20229	85.00 L	248+97.08	C/L Spout Springs Road
ARC LENGTH = 30.13			
CHORD BEAR = S 3°27'46.7" W			
LNTH CHORD = 30.13			
RADIUS = 1315.00			
DEGREE = 4°21'25.5"			
DE20230	85.00 L	248+65.00	C/L Spout Springs Road
DE20231	100.00 L	248+65.00	C/L Spout Springs Road
DE20232	100.00 L	248+98.45	C/L Spout Springs Road
DE20229	85.00 L	248+97.08	C/L Spout Springs Road

38 DWIGHT B. & FRANCES L. PEUGH
SEE SHEETS 18, 21

REQD R/W - PAR 38/SV323 REQ'D R/W DE20092

PNT	OFFSET/ DIST	STATION/ BEARING	ALIGNMENT
4533	30.56 L	252+98.10	C/L Spout Springs Road
ARC LENGTH = 394.06			
CHORD BEAR = S 2°48'35.3" E			
LNTH CHORD = 391.96			
RADIUS = 1100.00			
DEGREE = 5°12'31.3"			
4537	48.00 L	248+93.81	C/L Spout Springs Road
	37.13	N 82°19'34.0" W	
DE20229	85.00 L	248+97.08	C/L Spout Springs Road
ARC LENGTH = 190.61			
CHORD BEAR = N 1°20'45.0" W			
LNTH CHORD = 190.44			
RADIUS = 1315.00			
DEGREE = 4°21'25.5"			
DE20235	85.00 L	251+00.00	C/L Spout Springs Road
	25.00	S 84°30'06.2" W	
DE20234	110.00 L	251+00.00	C/L Spout Springs Road
ARC LENGTH = 136.83			
CHORD BEAR = N 8°32'13.2" W			
LNTH CHORD = 136.77			
RADIUS = 1290.00			
DEGREE = 4°26'29.5"			
DE20233	110.00 L	252+48.50	C/L Spout Springs Road
	17.38	N 51°20'13.9" E	
4528	94.50 L	252+56.99	C/L Spout Springs Road
	17.98	N 51°20'13.9" E	
4532	78.42 L	252+65.56	C/L Spout Springs Road
	57.16	N 43°53'52.4" E	
4533	30.56 L	252+98.10	C/L Spout Springs Road
REQD R/W = 21169.76 SF			
REQD R/W = 0.486 ACRES			
REMAINDER = +/- 1.6 ACRES			

PESMT - PAR 38/SV323 EASM'T. FOR CONST. AND MAINT. OF SLOPES AND UTILITIES DE20569

PNT	OFFSET/ DIST	STATION/ BEARING	ALIGNMENT
DE20233	110.00 L	252+48.50	C/L Spout Springs Road
ARC LENGTH = 44.69			
CHORD BEAR = S 10°34'59.7" E			
LNTH CHORD = 44.69			
RADIUS = 1290.00			
DEGREE = 4°26'29.5"			
DE20236	110.00 L	252+00.00	C/L Spout Springs Road
	42.25	S 61°55'43.7" W	
DE20237	150.00 L	251+85.00	C/L Spout Springs Road
	35.85	N 32°30'58.5" W	
DE20238	163.88 L	252+22.23	C/L Spout Springs Road
	41.02	N 56°54'32.4" E	
4531	125.91 L	252+39.55	C/L Spout Springs Road
	17.90	N 51°20'13.9" E	
DE20233	110.00 L	252+48.50	C/L Spout Springs Road
REQD EASMT = 1924.86 SF			
REQD EASMT = 0.044 ACRES			

DWESMT - PAR 38/SV323 REQ'D DRWY. EASM'T. DE20094

PNT	OFFSET/	STATION/	ALIGNMENT
DE20239	85.00 L	249+60.00	C/L Spout Springs Road
ARC LENGTH = 42.27			
CHORD BEAR = S 1°09'07.9" W			
LNTH CHORD = 42.27			
RADIUS = 1315.00			
DEGREE = 4°21'25.5"			
DE20240	85.00 L	249+15.00	C/L Spout Springs Road
DE20241	115.00 L	249+15.00	C/L Spout Springs Road
DE20242	115.00 L	249+60.00	C/L Spout Springs Road
DE20239	85.00 L	249+60.00	C/L Spout Springs Road

39 BAILEY FAMILY ENTERPTISES, LLC
SEE SHEETS 18, 21

REQD R/W - PAR 39/SV302 REQ'D R/W DE20095

PNT	OFFSET/ DIST	STATION/ BEARING	ALIGNMENT
4601	61.56 R	250+39.75	C/L Spout Springs Road
ARC LENGTH = 241.34			
CHORD BEAR = N 5°57'06.6" W			
LNTH CHORD = 240.94			
RADIUS = 1200.00			
DEGREE = 4°46'28.7"			
4600	69.12 R	252+70.09	C/L Spout Springs Road
	10.03	N 82°27'34.4" E	
4599	79.11 R	252+69.28	C/L Spout Springs Road
ARC LENGTH = 98.69			
CHORD BEAR = N 14°00'56.1" W			
LNTH CHORD = 98.66			
RADIUS = 1210.00			
DEGREE = 4°44'06.7"			
4598	79.67 R	253+62.66	C/L Spout Springs Road
	65.72	N 50°10'13.5" E	
4594	140.12 R	253+86.56	C/L Spout Springs Road
	72.39	N 58°36'44.1" E	
4593	210.41 R	254+01.96	C/L Spout Springs Road
	46.00	N 41°06'37.8" E	
DE20243	250.00 R	254+22.08	C/L Spout Springs Road
ARC LENGTH = 261.74			
CHORD BEAR = S 14°08'05.9" E			
LNTH CHORD = 261.47			
RADIUS = 1650.00			
DEGREE = 3°28'20.9"			
DE20244	250.00 R	252+00.00	C/L Spout Springs Road
	194.61	S 27°29'00.2" W	
DE20222	140.53 R	250+58.66	C/L Spout Springs Road
	81.53	S 72°10'58.7" W	
4601	61.56 R	250+39.75	C/L Spout Springs Road
REQD R/W = 57856.30 SF			
REQD R/W = 1.328 ACRES			
REMAINDER = +/- 7.6 ACRES			

STV 100 Years
3700 CRESTWOOD PARKWAY NW, SUITE 800
DULUTH, GEORGIA 30096
PHONE: (770)452-0797 FAX: (770)936-9171

DATE	REVISIONS	DATE	REVISIONS

HALL COUNTY
DEPARTMENT OF PUBLIC WORKS

RIGHT OF WAY DATA

PROJECT NO: 0015280
COUNTY: HALL
LAND LOT NO: N/A
LAND DISTRICT: N/A
GMD: 1270 / 1419 / 392
DATE 9/28/22 SH 20 OF 46

5/24/2023	GPLOT-V8	0015280_60-21.dgn	SHEET NO.	TOTAL SHEETS
GoCC	gplotborder-V81-P0.tbl	GRWPLN	21	46

STV 100 Years
3700 CRESTWOOD PARKWAY NW, SUITE 800
DULUTH, GEORGIA 30096
PHONE: (770)452-0797 FAX: (770)936-9171

SEE SHEET 22 FOR ALIGNMENT CURVE DATA TABLES

REFERENCE POINT	NORTHING	EASTING
PRC 259+01.35	1498608.6573	2384784.5977

MEDIAN DESIGN CHANGE-OVER LOCATIONS				
	END	BEGIN	WIDTH	STATION
Ⓓ	BIORETENTION	RAISED CONCRETE	8'	253+92.29
Ⓑ	RAISED CONCRETE	RAISED LANDSCAPED	8'	262+76.05

SCALE IN FEET
0 50 100 200

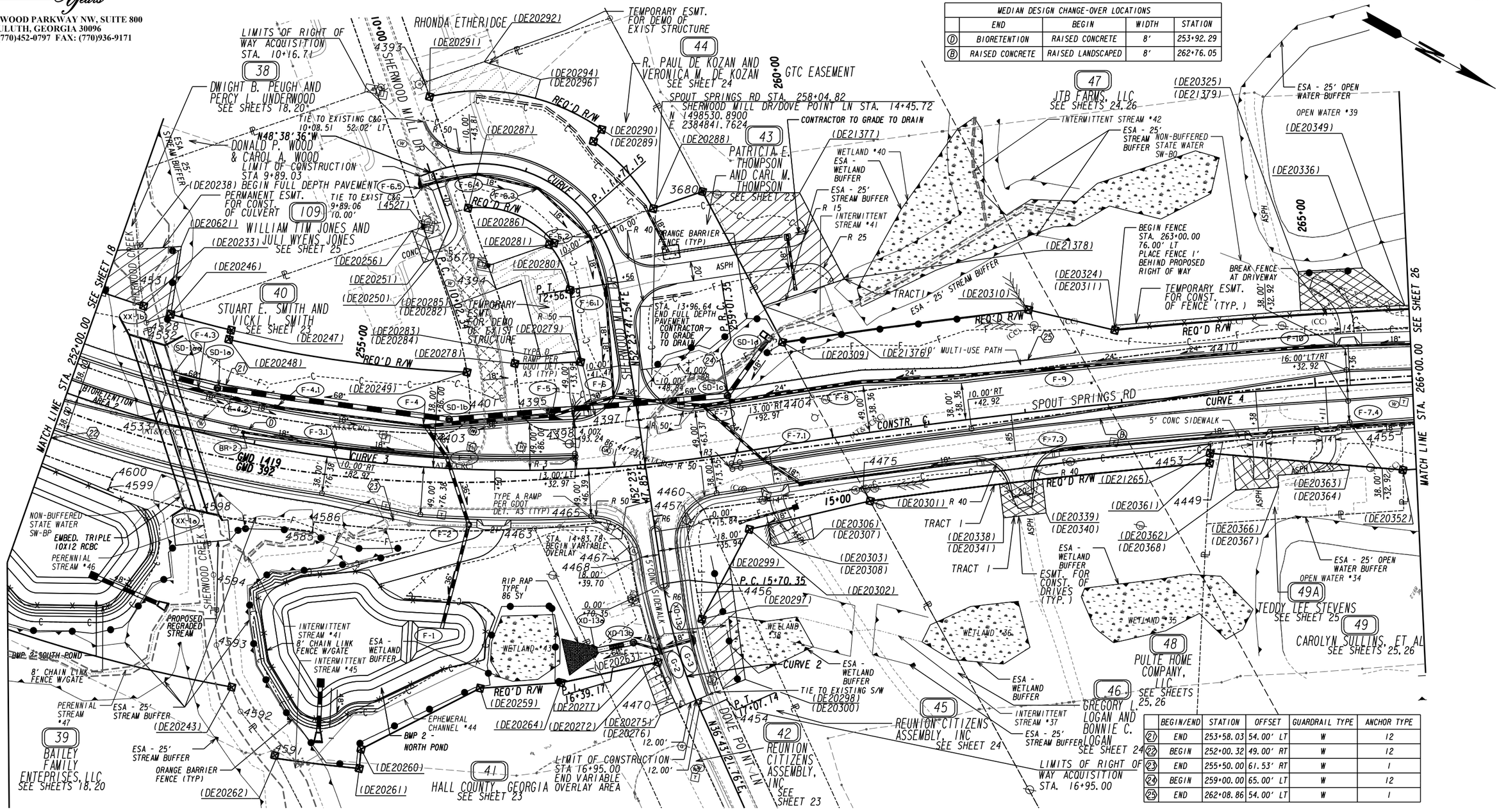

	BEGIN/END	STATION	OFFSET	GUARDRAIL TYPE	ANCHOR TYPE
21	END	253+58.03	54.00' LT	W	12
22	BEGIN	252+00.32	49.00' RT	W	12
23	END	255+50.00	61.53' RT	W	1
24	BEGIN	259+00.00	65.00' LT	W	12
25	END	262+08.86	54.00' LT	W	1

PROPERTY AND EXISTING R/W LINE
REQUIRED R/W LINE
CONSTRUCTION LIMITS
EASEMENT FOR CONSTR & MAINTENANCE OF SLOPES AND UTILITIES
EASEMENT FOR CONSTR OF SLOPES
EASEMENT FOR CONSTR OF DRIVES

BEGIN LIMIT OF ACCESS.....BLA
END LIMIT OF ACCESS.....ELA
LIMIT OF ACCESS
REQ'D R/W & LIMIT OF ACCESS
ORANGE BARRIER FENCE
ESA - ENV. SENSITIVE AREA (SEE ERIT TABLE)

DATE	REVISIONS	DATE	REVISIONS

HALL COUNTY
DEPARTMENT OF PUBLIC WORKS

RIGHT OF WAY PLANS

PROJECT NO: 0015280
COUNTY: HALL
LAND LOT NO: N/A
LAND DISTRICT: N/A
GMD: 1419 / 392
DATE 9/28/22 SH 21 OF 46

SPOUT SPRINGS RD

Curve° 3	Curve° 4
PI Sta: 252+58.44	PI Sta: 268+69.40 (1) PI Sta: 288+06.87 (2)
N: 1497997.0139	N: 1499368.4233 (1) N: 1501205.0160 (2)
E: 2385267.5410	E: 2384184.6992 (1) E: 2383517.5559 (2)
DELTA: 58°12'20.6" (LT)	DELTA: 27°43'28.4" (RT)
D: 04°05'33.20"	D: 00°57'17.75"(1) D: 00°28'38.87"(2)
T: 779.32	T: 1653.62(1) T: 2306.90(2)
L: 1422.23	L: 1919.56(1) L: 1967.50(2)
R: 1400.00	R: 6000.00(1) R: 12000.00(2)
E: 202.29	E: 223.70
e: 3.40%	e: N/A

SHERWOOD MILL DR/DOVE POINT LN

Curve° 1	Curve° 2
PI Sta: 11+77.15	PI Sta: 16+39.17
N: 1498308.6300	N: 1498648.9340
E: 2384553.1880	E: 2384995.0270
DELTA:101°02'23.9" (RT)	DELTA: 15°40'26.1" (LT)
D: 39°47'19.45"	D: 11°27'32.96"
T: 174.81	T: 68.82
L: 253.94	L: 136.78
R: 144.00	R: 500.00
E: 82.48	E: 4.71
e: 4.00%	e: N/A

STV 100 Years
3700 CRESTWOOD PARKWAY NW, SUITE 800
DULUTH, GEORGIA 30096
PHONE: (770)452-0797 FAX: (770)936-9171

DATE	REVISIONS	DATE	REVISIONS

HALL COUNTY
DEPARTMENT OF PUBLIC WORKS

ALIGNMENT CURVE DATA

PROJECT NO: 0015280
COUNTY: HALL
LAND LOT NO: N/A
LAND DISTRICT: N/A
GMD: 1419 / 392
DATE 9/28/22 SH 22 OF 46

40 STUART E. SMITH AND VICKI L. SMITH
SEE SHEET 21

REQD R/W - PAR 40/SV320 REQ'D R/W DE20096

PNT	OFFSET/ DIST		STATION/ BEARING	ALIGNMENT
4403	35.27	L	255+92.09	C/L Spout Springs Road
ARC LENGTH = 287.41				
CHORD BEAR = S 20°33'27.4" E				
LNTH CHORD = 286.59				
RADIUS = 1100.00				
DEGREE = 5°12'31.3"				
4533	30.56	L	252+98.09	C/L Spout Springs Road
	57.16		S 43°53'52.4" W	
4532	78.42	L	252+65.56	C/L Spout Springs Road
	17.98		S 51°20'13.9" W	
4528	94.50	L	252+56.99	C/L Spout Springs Road
	26.56		N 48°05'41.1" W	
DE20246	110.00	L	252+80.26	C/L Spout Springs Road
ARC LENGTH = 64.26				
CHORD BEAR = N 14°18'09.4" W				
LNTH CHORD = 64.25				
RADIUS = 1290.00				
DEGREE = 4°26'29.5"				
DE20247	110.00	L	253+50.00	C/L Spout Springs Road
	10.00		N 74°16'13.2" E	
DE20248	100.00	L	253+50.00	C/L Spout Springs Road
ARC LENGTH = 247.86				
CHORD BEAR = N 21°11'30.4" W				
LNTH CHORD = 247.49				
RADIUS = 1300.00				
DEGREE = 4°24'26.5"				
DE20249	100.00	L	256+16.93	C/L Spout Springs Road
ARC LENGTH = 31.44				
CHORD BEAR = N 54°27'39.1" E				
LNTH CHORD = 31.44				
RADIUS = 399.22				
DEGREE = 14°21'07.0"				
4401	68.93	L	256+22.04	C/L Spout Springs Road
ARC LENGTH = 49.87				
CHORD BEAR = S 75°39'45.9" E				
LNTH CHORD = 44.32				
RADIUS = 30.00				
DEGREE = 190°59'09.4"				
4403	35.27	L	255+92.09	C/L Spout Springs Road

REQD R/W = 22916.37 SF
REQD R/W = 0.526 ACRES
REMAINDER = +/- 0.57 ACRES

DWESWT - PAR 40/SV320 REQ'D DRWY. EASM'T. DE20596

PNT	OFFSET/		STATION/	ALIGNMENT
4527	246.58	L	255+54.89	C/L Spout Springs Road
DE20250	214.66	L	255+71.61	C/L Spout Springs Road
DE20251	209.89	L	255+59.04	C/L Spout Springs Road
DE20256	241.64	L	255+41.61	C/L Spout Springs Road
4527	246.58	L	255+54.89	C/L Spout Springs Road

41 HALL COUNTY, GEORGIA
SEE SHEET 21

REQD R/W - PAR 41/SV301 REQ'D R/W DE20097

PNT	OFFSET/ DIST		STATION/ BEARING	ALIGNMENT
4598	79.67	R	253+62.66	C/L Spout Springs Road
ARC LENGTH = 115.90				
CHORD BEAR = N 19°05'46.6" W				
LNTH CHORD = 115.86				
RADIUS = 1210.00				
DEGREE = 4°44'06.7"				
4585	78.45	R	254+72.35	C/L Spout Springs Road
	10.01		S 70°22'42.4" W	
4586	68.44	R	254+72.54	C/L Spout Springs Road
ARC LENGTH = 227.74				
CHORD BEAR = N 27°17'44.3" W				
LNTH CHORD = 227.39				
RADIUS = 1200.00				
DEGREE = 4°46'28.7"				
4463	60.08	R	256+90.02	C/L Spout Springs Road
	164.92		N 36°34'00.1" E	
DE20263	83.38	R	16+41.14	Sherwood Mill Dr/Dove Point Lane
	41.75		S 41°01'11.7" E	
DE20264	125.00	R	16+38.40	Sherwood Mill Dr/Dove Point Lane
	83.77		S 32°53'30.3" E	
DE20259	225.00	R	256+40.00	C/L Spout Springs Road
	137.65		S 56°05'49.3" E	
DE20260	295.00	R	255+40.00	C/L Spout Springs Road
	20.00		N 66°29'40.4" E	
DE20261	315.00	R	255+40.00	C/L Spout Springs Road
ARC LENGTH = 86.04				
CHORD BEAR = S 22°04'05.4" E				
LNTH CHORD = 86.03				
RADIUS = 1715.00				
DEGREE = 3°20'27.1"				
DE20262	315.00	R	254+69.76	C/L Spout Springs Road
	3.41		S 33°36'03.4" W	
4591	312.24	R	254+68.14	C/L Spout Springs Road
	57.49		S 23°03'38.0" W	
4592	273.09	R	254+33.31	C/L Spout Springs Road
	72.66		S 41°06'37.8" W	
4593	210.41	R	254+01.96	C/L Spout Springs Road
	72.39		S 58°36'44.1" W	
4594	140.12	R	253+86.56	C/L Spout Springs Road
	65.72		S 50°10'13.5" W	
4598	79.67	R	253+62.66	C/L Spout Springs Road

REQD R/W = 72564.79 SF
REQD R/W = 1.666 ACRES
REMAINDER = +/- 3.4 ACRES

42 REUNION CITIZENS ASSEMBLY, INC
SEE SHEET 21

REQD R/W - PAR 42/SV300 REQ'D R/W DE20099

PNT	OFFSET/ DIST		STATION/ BEARING	ALIGNMENT
4463	60.08	R	256+90.02	C/L Spout Springs Road
ARC LENGTH = 64.24				
CHORD BEAR = N 34°15'57.3" W				
LNTH CHORD = 64.23				
RADIUS = 1200.00				
DEGREE = 4°46'28.7"				
4465	56.31	R	257+51.59	C/L Spout Springs Road
ARC LENGTH = 46.01				
CHORD BEAR = N 8°08'03.4" E				
LNTH CHORD = 41.63				
RADIUS = 30.00				
DEGREE = 190°59'09.4"				
4467	29.36	R	15+27.55	Sherwood Mill Dr/Dove Point Lane
	13.63		N 52°04'04.7" E	
4468	29.28	R	15+41.19	Sherwood Mill Dr/Dove Point Lane
ARC LENGTH = 108.72				
CHORD BEAR = N 46°12'08.7" E				
LNTH CHORD = 108.53				
RADIUS = 531.00				
DEGREE = 10°47'24.6"				
DE20272	23.52	R	16+45.83	Sherwood Mill Dr/Dove Point Lane
	60.08		S 41°01'11.7" E	
DE20263	83.38	R	16+41.14	Sherwood Mill Dr/Dove Point Lane
	164.92		S 36°34'00.1" W	
4463	60.08	R	256+90.02	C/L Spout Springs Road

REQD R/W = 11149.05 SF
REQD R/W = 0.256 ACRES
REMAINDER = +/- 0.51 ACRES

PESWT - PAR 42/SV300 EASM'T. FOR CONST. AND MAINT. OF SLOPES AND UTILITIES DE20100

PNT	OFFSET/ DIST		STATION/ BEARING	ALIGNMENT
DE20272	23.52	R	16+45.83	Sherwood Mill Dr/Dove Point Lane
ARC LENGTH = 39.88				
CHORD BEAR = N 38°11'07.6" E				
LNTH CHORD = 39.87				
RADIUS = 531.00				
DEGREE = 10°47'24.6"				
4470	21.17	R	16+83.94	Sherwood Mill Dr/Dove Point Lane
	11.54		N 36°02'02.4" E	
DE20275	20.63	R	16+95.00	Sherwood Mill Dr/Dove Point Lane
	19.37		S 51°53'12.2" E	
DE20276	40.00	R	16+95.00	Sherwood Mill Dr/Dove Point Lane
	54.59		S 41°00'39.8" W	
DE20277	40.00	R	16+44.43	Sherwood Mill Dr/Dove Point Lane
	16.54		N 40°59'12.0" W	
DE20272	23.52	R	16+45.83	Sherwood Mill Dr/Dove Point Lane

REQD EASMT = 926.50 SF
REQD EASMT = 0.021 ACRES

43 PATRICIA E. THOMPSON AND CARL M. THOMPSON
SEE SHEET 21

REQD - PAR 43/SV318 REQ'D R/W DE20101

PNT	OFFSET/ DIST		STATION/ BEARING	ALIGNMENT
4404	44.39	L	259+84.86	C/L Spout Springs Road
	225.23		S 36°19'46.0" E	
4397	44.17	L	257+55.52	C/L Spout Springs Road
ARC LENGTH = 45.89				
CHORD BEAR = S 35°08'03.6" E				
LNTH CHORD = 45.89				
RADIUS = 1100.00				
DEGREE = 5°12'31.3"				
4398	41.15	L	257+08.29	C/L Spout Springs Road
ARC LENGTH = 48.48				
CHORD BEAR = S 12°20'09.9" W				
LNTH CHORD = 43.37				
RADIUS = 30.00				
DEGREE = 190°59'09.4"				
4395	70.20	L	256+74.75	C/L Spout Springs Road
ARC LENGTH = 40.07				
CHORD BEAR = S 54°35'44.3" W				
LNTH CHORD = 40.05				
RADIUS = 449.22				
DEGREE = 12°45'16.2"				
DE20278	110.00	L	256+69.91	C/L Spout Springs Road
ARC LENGTH = 67.87				
CHORD BEAR = N 30°19'45.9" W				
LNTH CHORD = 67.86				
RADIUS = 1290.00				
DEGREE = 4°26'29.5"				
DE20279	50.00	R	13+31.46	Sherwood Mill Dr/Dove Point Lane
	75.17		S 52°23'47.5" W	
DE20280	50.00	R	12+56.29	Sherwood Mill Dr/Dove Point Lane
ARC LENGTH = 51.71				
CHORD BEAR = S 36°38'19.2" W				
LNTH CHORD = 51.06				
RADIUS = 94.00				
DEGREE = 60°57'10.6"				
DE20281	50.00	R	11+77.08	Sherwood Mill Dr/Dove Point Lane
	166.95		N 48°05'41.1" W	
3680	112.92	L	12+10.96	Sherwood Mill Dr/Dove Point Lane
	239.97		N 32°58'41.9" E	
4404	44.39	L	259+84.86	C/L Spout Springs Road

REQD R/W = 45148.60 SF
REQD R/W = 1.036 ACRES
REMAINDER = +/- 0.19 ACRES

TESWT - PAR 43/SV318 EASM'T. FOR DEMO OF EXISTING STRUCTURE DE20571

PNT	OFFSET/ DIST		STATION/ BEARING	ALIGNMENT
DE20281	50.00	R	11+77.08	Sherwood Mill Dr/Dove Point Lane
ARC LENGTH = 51.71				
CHORD BEAR = N 36°38'19.2" E				
LNTH CHORD = 51.06				
RADIUS = 94.00				
DEGREE = 60°57'10.6"				
DE20280	50.00	R	12+56.29	Sherwood Mill Dr/Dove Point Lane
DE20283	50.00	R	13+20.00	Sherwood Mill Dr/Dove Point Lane
DE20284	90.00	R	13+20.00	Sherwood Mill Dr/Dove Point Lane
DE20285	95.00	R	12+05.00	Sherwood Mill Dr/Dove Point Lane
DE20282	121.43	R	11+78.16	Sherwood Mill Dr/Dove Point Lane
4394	121.14	R	11+73.52	Sherwood Mill Dr/Dove Point Lane
3679	104.21	R	10+84.31	Sherwood Mill Dr/Dove Point Lane
DE20281	50.00	R	11+77.08	Sherwood Mill Dr/Dove Point Lane

REQD EASMT AREA = 5523.15 SF

44 R. PAUL DE KOZAN AND VERONICA M. DE KOZAN
SEE SHEET 21

REQD - PAR 44/SV319 REQ'D R/W DE20102

PNT	OFFSET/ DIST		STATION/ BEARING	ALIGNMENT
DE20286	45.00	R	11+79.86	Sherwood Mill Dr/Dove Point Lane
ARC LENGTH = 99.81				
CHORD BEAR = S 6°53'32.5" E				
LNTH CHORD = 95.63				
RADIUS = 99.00				
DEGREE = 57°52'28.3"				
DE20287	45.00	R	10+34.69	Sherwood Mill Dr/Dove Point Lane
	121.26		S 41°54'18.8" W	
DE20291	75.00	L	10+17.64	Sherwood Mill Dr/Dove Point Lane
ARC LENGTH = 186.10				
CHORD BEAR = N 18°12'56.0" W				
LNTH CHORD = 180.55				
RADIUS = 219.00				
DEGREE = 26°09'44.8"				
DE20290	75.00	L	11+40.00	Sherwood Mill Dr/Dove Point Lane
	15.00		S 83°52'18.9" E	
DE20289	60.00	L	11+40.00	Sherwood Mill Dr/Dove Point Lane
ARC LENGTH = 93.50				
CHORD BEAR = N 19°15'32.1" E				
LNTH CHORD = 92.69				
RADIUS = 204.00				
DEGREE = 28°05'10.2"				
DE20288	60.00	L	12+06.00	Sherwood Mill Dr/Dove Point Lane
	108.11		S 48°05'41.1" E	
DE20286	45.00	R	11+79.86	Sherwood Mill Dr/Dove Point Lane

REQD R/W = 21870.63 SF
REQD R/W = 0.502 ACRES
REMAINDER = +/- 0.50 ACRES

TESMT - PAR 44/SV319 EASM'T. FOR DEMO OF EXISTING STRUCTURE DE20572

PNT	OFFSET/	STATION/	ALIGNMENT
DE20296	75.00 L	10+90.00	Sherwood Mill Dr/Dove Point Lane
ARC LENGTH = 110.05			
CHORD BEAR = S 28°09'45.9" E			
LNTH CHORD = 108.90			
RADIUS = 219.00			
DEGREE = 26°09'44.8"			
DE20291	75.00 L	10+17.64	Sherwood Mill Dr/Dove Point Lane
4393	90.62 L	10+16.71	Sherwood Mill Dr/Dove Point Lane
DE20292	105.00 L	10+54.53	Sherwood Mill Dr/Dove Point Lane
DE20294	95.00 L	10+90.00	Sherwood Mill Dr/Dove Point Lane
DE20296	75.00 L	10+90.00	Sherwood Mill Dr/Dove Point Lane

REQD EASMT AREA = 2623.22 SF

STV 100 Years
3700 CRESTWOOD PARKWAY NW, SUITE 800
DULUTH, GEORGIA 30096
PHONE: (770)452-0797 FAX: (770)936-9171

DATE	REVISIONS	DATE	REVISIONS

HALL COUNTY
DEPARTMENT OF PUBLIC WORKS

RIGHT OF WAY DATA

PROJECT NO: 0015280
COUNTY: HALL
LAND LOT NO: N/A
LAND DISTRICT: N/A
GMD: 1419 / 392
DATE 9/28/22 SH 23 OF 46

45 REUNION CITIZENS ASSEMBLY, INC
SEE SHEET 21

REQD - PAR 45/SV299 REQ'D R/W DE20103

PNT	OFFSET/ DIST	STATION/ BEARING	ALIGNMENT
DE20297	32.09 L	16+15.00	Sherwood Mill Dr/Dove Point Lane
ARC LENGTH = 27.82			
CHORD BEAR = S 50°22'06.4" W			
LNTH CHORD = 27.82			
RADIUS = 469.00			
DEGREE = 12°12'59.7"			
4456	32.76 L	15+85.26	Sherwood Mill Dr/Dove Point Lane
	55.60	S 52°04'04.7" W	
4457	32.65 L	15+28.68	Sherwood Mill Dr/Dove Point Lane
ARC LENGTH = 36.99			
CHORD BEAR = S 87°23'39.0" W			
LNTH CHORD = 34.69			
RADIUS = 30.00			
DEGREE = 190°59'09.4"			
4460	52.53 R	258+58.38	C/L Spout Springs Road
	65.00	N 36°33'10.6" E	
DE20299	70.29 L	15+62.80	Sherwood Mill Dr/Dove Point Lane
	61.23	N 88°48'01.2" E	
DE20297	32.09 L	16+15.00	Sherwood Mill Dr/Dove Point Lane
REQD R/W = 2578.83 SF			
REQD R/W = 0.059 ACRES			
REMAINDER = +/- 0.55 ACRES			

PESWT - PAR 45/SV299 EASW'T. FOR CONST. AND MAINT. OF SLOPES AND UTILITIES DE20104

PNT	OFFSET/ DIST	STATION/ BEARING	ALIGNMENT
DE20298	30.27 L	16+95.00	Sherwood Mill Dr/Dove Point Lane
ARC LENGTH = 75.03			
CHORD BEAR = S 44°05'08.3" W			
LNTH CHORD = 74.95			
RADIUS = 469.00			
DEGREE = 12°12'59.7"			
DE20297	32.09 L	16+15.00	Sherwood Mill Dr/Dove Point Lane
	61.23	S 88°48'01.2" W	
DE20299	70.29 L	15+62.80	Sherwood Mill Dr/Dove Point Lane
	117.36	N 53°08'48.8" E	
DE20300	55.00 L	16+95.00	Sherwood Mill Dr/Dove Point Lane
	24.73	S 51°53'12.2" E	
DE20298	30.27 L	16+95.00	Sherwood Mill Dr/Dove Point Lane
REQD EASWT = 3091.23 SF			
REQD EASWT = 0.071 ACRES			

46 GREGORY L. LOGAN AND BONNIE C. LOGAN
SEE SHEET 21

REQD R/W - PAR 46/SV298 REQ'D R/W DE20105

PNT	OFFSET/ DIST	STATION/ BEARING	ALIGNMENT
4460	52.53 R	258+58.38	C/L Spout Springs Road
	165.85	N 36°19'46.0" W	
4475	56.29 R	260+23.69	C/L Spout Springs Road
	14.65	N 32°11'23.6" E	
DE20301	70.00 R	260+28.92	C/L Spout Springs Road
	127.80	S 42°10'47.0" E	
DE20302	80.00 R	259+00.00	C/L Spout Springs Road
	43.36	N 88°48'08.9" E	
DE20299	70.29 L	15+62.80	Sherwood Mill Dr/Dove Point Lane
	65.00	S 36°33'10.6" W	
4460	52.53 R	258+58.38	C/L Spout Springs Road
REQD R/W = 4227.04 SF			
REQD R/W = 0.097 ACRES			
REMAINDER = +/- 1.9 ACRES			

DWESWT - PAR 46/SV298 REQ'D DRWY. EASW'T. DE20106

PNT	OFFSET/	STATION/	ALIGNMENT
DE20303	78.62 R	259+20.00	C/L Spout Springs Road
DE20306	75.30 R	259+65.00	C/L Spout Springs Road
DE20307	100.00 R	259+65.00	C/L Spout Springs Road
DE20308	100.00 R	259+19.92	C/L Spout Springs Road
DE20303	78.62 R	259+20.00	C/L Spout Springs Road

47 JTB FARMS, LLC
SEE SHEETS 21, 26

REQD R/W - PAR 47/SV317 REQ'D R/W DE20107

PNT	OFFSET/ DIST	STATION/ BEARING	ALIGNMENT
DE21081	28.88 R	12+00.00	Williams Road
ARC LENGTH = 57.98			
CHORD BEAR = N 69°52'29.1" E			
LNTH CHORD = 57.98			
RADIUS = 2419.25			
DEGREE = 2°22'06.0"			
4352	29.18 R	12+56.07	Williams Road
	27.31	N 69°11'17.4" E	
4349	27.35 L	275+66.78	C/L Spout Springs Road
	495.22	S 23°01'05.7" E	
4408	42.25 L	270+74.50	C/L Spout Springs Road
ARC LENGTH = 685.36			
CHORD BEAR = S 29°40'25.8" E			
LNTH CHORD = 683.82			
RADIUS = 2950.00			
DEGREE = 1°56'32.0"			
4410	50.13 L	263+95.59	C/L Spout Springs Road
	413.93	S 36°19'46.0" E	
4404	44.39 L	259+84.86	C/L Spout Springs Road
	64.27	S 32°58'41.9" W	
DE20309	105.00 L	259+63.75	C/L Spout Springs Road
ARC LENGTH = 255.65			
CHORD BEAR = N 36°29'54.8" W			
LNTH CHORD = 255.63			
RADIUS = 6105.00			
DEGREE = 0°56'18.6"			
DE20310	105.00 L	262+15.00	C/L Spout Springs Road
	91.34	N 15°43'10.3" W	
DE20311	75.00 L	263+00.00	C/L Spout Springs Road
ARC LENGTH = 506.25			
CHORD BEAR = N 32°05'59.6" W			
LNTH CHORD = 506.10			
RADIUS = 6075.00			
DEGREE = 0°56'35.3"			
DE20312	75.00 L	268+00.00	C/L Spout Springs Road
	55.00	S 60°17'14.8" W	
DE20313	130.00 L	268+00.00	C/L Spout Springs Road
ARC LENGTH = 408.67			
CHORD BEAR = N 27°48'09.7" W			
LNTH CHORD = 408.59			
RADIUS = 6130.00			
DEGREE = 0°56'04.8"			
DE20314	130.00 L	272+00.00	C/L Spout Springs Road
	60.00	N 64°06'25.7" E	
DE20315	70.00 L	272+00.00	C/L Spout Springs Road
ARC LENGTH = 303.50			
CHORD BEAR = N 24°27'37.6" W			
LNTH CHORD = 303.47			
RADIUS = 6070.00			
DEGREE = 0°56'38.1"			
DE20316	70.00 L	275+00.00	C/L Spout Springs Road
	82.64	N 53°42'35.8" W	
DE21081	28.88 R	12+00.00	Williams Road
REQD R/W = 80182.30 SF			
REQD R/W = 1.841 ACRES			
REMAINDER = +/- 47 ACRES			

PESWT - PAR 47/SV317 - TRACT 1 EASW'T. FOR CONST. AND MAINT. OF SLOPES AND UTILITIES DE20564

PNT	OFFSET/ DIST	STATION/ BEARING	ALIGNMENT
DE21376	145.00 L	259+50.06	C/L Spout Springs Road
	133.33	S 32°58'41.8" W	
3680	112.92 L	12+10.96	Sherwood Mill Dr/Dove Point Lane
	100.22	N 28°18'36.2" W	
DE21377	205.00 L	12+30.00	Sherwood Mill Dr/Dove Point Lane
	100.27	N 33°26'31.9" E	
DE21378	160.00 L	260+35.00	C/L Spout Springs Road
	88.38	S 47°11'39.9" E	
DE21376	145.00 L	259+50.06	C/L Spout Springs Road
REQD EASWT = 10232.06 SF			
REQD EASWT = 0.235 ACRES			

47 JTB FARMS, LLC
SEE SHEETS 21, 26

PESWT - PAR 47/SV317 - TRACT 2 EASW'T. FOR CONST. AND MAINT. OF SLOPES AND UTILITIES DE20108

PNT	OFFSET/ DIST	STATION/ BEARING	ALIGNMENT
DE20321	30.45 R	11+26.00	Williams Road
ARC LENGTH = 74.56			
CHORD BEAR = N 71°26'39.3" E			
LNTH CHORD = 74.55			
RADIUS = 2419.25			
DEGREE = 2°22'06.0"			
DE21081	28.88 R	12+00.00	Williams Road
	31.78	S 53°42'34.1" E	
DE21082	55.00 R	12+17.15	Williams Road
	93.42	S 72°19'34.7" W	
DE20323	55.00 R	11+26.00	Williams Road
	24.55	N 17°14'59.7" W	
DE20321	30.45 R	11+26.00	Williams Road
REQD EASWT = 2101.34 SF			
REQD EASWT = 0.048 ACRES			

TESWT - PAR 47/SV317 EASW'T. FOR CONST. OF FENCE DE20545

PNT	OFFSET/	STATION/	ALIGNMENT
DE21082	55.00 R	12+17.15	Williams Road
DE20316	70.00 L	275+00.00	C/L Spout Springs Road
ARC LENGTH = 303.50			
CHORD BEAR = S 24°27'37.6" E			
LNTH CHORD = 303.47			
RADIUS = 6070.00			
DEGREE = 0°56'38.1"			
DE20315	70.00 L	272+00.00	C/L Spout Springs Road
DE20314	130.00 L	272+00.00	C/L Spout Springs Road
ARC LENGTH = 408.67			
CHORD BEAR = S 27°48'09.7" E			
LNTH CHORD = 408.59			
RADIUS = 6130.00			
DEGREE = 0°56'04.8"			
DE20313	130.00 L	268+00.00	C/L Spout Springs Road
DE20312	75.00 L	268+00.00	C/L Spout Springs Road
ARC LENGTH = 506.25			
CHORD BEAR = S 32°05'59.6" E			
LNTH CHORD = 506.10			
RADIUS = 6075.00			
DEGREE = 0°56'35.3"			
DE20311	75.00 L	263+00.00	C/L Spout Springs Road
DE20324	80.00 L	263+00.00	C/L Spout Springs Road
DE20325	80.00 L	264+90.00	C/L Spout Springs Road
DE20326	80.00 L	266+83.20	C/L Spout Springs Road
DE20327	80.00 L	267+95.00	C/L Spout Springs Road
DE20328	135.00 L	267+95.00	C/L Spout Springs Road
DE20329	135.00 L	270+00.00	C/L Spout Springs Road
DE20330	135.00 L	272+05.00	C/L Spout Springs Road
DE20331	75.00 L	272+05.00	C/L Spout Springs Road
DE20332	75.00 L	273+50.00	C/L Spout Springs Road
DE20333	75.00 L	275+00.00	C/L Spout Springs Road
DE20334	54.77 R	12+09.84	Williams Road
DE21082	55.00 R	12+17.15	Williams Road
REQD EASWT AREA = 6390.17 SF			

DWESWT - PAR 47/SV317 REQ'D DRWY. EASW'T. DE20109

PNT	OFFSET/	STATION/	ALIGNMENT
DE20349	79.22 L	265+96.00	C/L Spout Springs Road
DE20325	80.00 L	264+90.00	C/L Spout Springs Road
DE21379	120.00 L	264+90.00	C/L Spout Springs Road
DE20336	120.00 L	265+55.00	C/L Spout Springs Road
DE20349	79.22 L	265+96.00	C/L Spout Springs Road

48 PULTE HOME COMPANY, LLC
SEE SHEETS 21, 26

REQD R/W - PAR 48/SV291-TRACT 1 REQ'D R/W DE20110

PNT	OFFSET/ DIST	STATION/ BEARING	ALIGNMENT
4475	56.29 R	260+23.69	C/L Spout Springs Road
	360.75	N 36°19'46.0" W	
4453	50.36 R	263+87.68	C/L Spout Springs Road
	19.81	N 63°53'15.0" E	
DE20361	70.00 R	263+85.05	C/L Spout Springs Road
ARC LENGTH = 351.97			
CHORD BEAR = S 35°22'31.6" E			
LNTH CHORD = 351.92			
RADIUS = 5930.00			
DEGREE = 0°57'58.3"			
DE20301	70.00 R	260+28.93	C/L Spout Springs Road
	14.65	S 32°11'23.6" W	
4475	56.29 R	260+23.69	C/L Spout Springs Road
REQD R/W = 5287.19 SF			
REQD R/W = 0.121 ACRES			
REMAINDER = +/- 55 ACRES			

REQD R/W - PAR 48/SV291-TRACT 2 REQ'D R/W DE20111

PNT	OFFSET/ DIST	STATION/ BEARING	ALIGNMENT
4414	62.68 R	275+64.37	C/L Spout Springs Road
	123.93	N 23°01'05.7" W	
4428	60.08 R	276+89.56	C/L Spout Springs Road
	9.95	N 64°20'13.2" E	
DE20342	70.00 R	276+90.34	C/L Spout Springs Road
ARC LENGTH = 124.32			
CHORD BEAR = S 21°48'40.0" E			
LNTH CHORD = 124.32			
RADIUS = 5930.00			
DEGREE = 0°57'58.3"			
DE21144	70.00 R	275+64.55	C/L Spout Springs Road
	7.32	S 66°15'15.1" W	
4414	62.68 R	275+64.37	C/L Spout Springs Road
REQD R/W = 1043.58 SF			
REQD R/W = 0.024 ACRES			

DWESWT - PAR 48/SV291-TRACT 1 REQ'D DRWY. EASW'T. DE20112

PNT	OFFSET/	STATION/	ALIGNMENT
DE20338	70.00 R	261+65.00	C/L Spout Springs Road
ARC LENGTH = 44.48			
CHORD BEAR = N 35°33'41.5" W			
LNTH CHORD = 44.47			
RADIUS = 5930.00			
DEGREE = 0°57'58.3"			
DE20339	70.00 R	262+10.00	C/L Spout Springs Road
DE20340	105.00 R	262+10.00	C/L Spout Springs Road
DE20341	105.00 R	261+64.98	C/L Spout Springs Road
DE20338	70.00 R	261+65.00	C/L Spout Springs Road

DWESWT - PAR 48/SV291-TRACT 2 REQ'D DRWY. EASW'T. DE20113

PNT	OFFSET/	STATION/	ALIGNMENT
DE20344	70.00 R	275+80.00	C/L Spout Springs Road
ARC LENGTH = 44.48			
CHORD BEAR = N 22°02'57.4" W			
LNTH CHORD = 44.47			
RADIUS = 5930.00			
DEGREE = 0°57'58.3"			
DE20345	70.00 R	276+25.00	C/L Spout Springs Road
DE20346	120.00 R	276+25.00	C/L Spout Springs Road
DE20347	120.00 R	275+80.00	C/L Spout Springs Road
DE20344	70.00 R	275+80.00	C/L Spout Springs Road

STV 100 Years
3700 CRESTWOOD PARKWAY NW, SUITE 800
DULUTH, GEORGIA 30096
PHONE: (770)452-0797 FAX: (770)936-9171

DATE	REVISIONS	DATE	REVISIONS

HALL COUNTY
DEPARTMENT OF PUBLIC WORKS

RIGHT OF WAY DATA

PROJECT NO: 0015280
COUNTY: HALL
LAND LOT NO: N/A
LAND DISTRICT: N/A
GMD: 1419 / 392
DATE 9/28/22 SH 24 OF 46

49 CAROLYN SULLINS, ET AL
SEE SHEETS 21, 26

REQD R/W - PAR 49/SV295 REQ'D R/W DE20114

PNT	OFFSET/ DIST	STATION/ BEARING	ALIGNMENT
4455	43.84 R	265+87.29	C/L Spout Springs Road
ARC LENGTH = 346.77			
CHORD BEAR = N 29°06'50.9" W			
LNTH CHORD = 346.55			
RADIUS = 2850.00			
DEGREE = 2°00'37.4"			
4446	49.66 R	269+36.57	C/L Spout Springs Road
	25.44	N 66°36'44.0" E	
DE21084	75.00 R	269+34.31	C/L Spout Springs Road
	343.79	S 32°35'33.5" E	
DE20352	90.00 R	265+86.01	C/L Spout Springs Road
	46.18	S 59°49'30.6" W	
4455	43.84 R	265+87.29	C/L Spout Springs Road
REQD R/W = 13535.79 SF			
REQD R/W = 0.311 ACRES			
REMAINDER = +/- 3.4 ACRES			

DWESWT - PAR 49/SV295 REQ'D DRWY. EASM'T. DE20115

PNT	OFFSET/	STATION/	ALIGNMENT
DE20353	84.12 R	267+80.00	C/L Spout Springs Road
DE20358	80.00 R	268+58.00	C/L Spout Springs Road
DE20359	95.00 R	268+40.00	C/L Spout Springs Road
DE20360	106.00 R	268+00.00	C/L Spout Springs Road
DE20353	84.12 R	267+80.00	C/L Spout Springs Road

49A TEDDY LEE STEVENS
SEE SHEET 21

REQD R/W - PAR 49A/SV455 REQ'D R/W DE20116

PNT	OFFSET/ DIST	STATION/ BEARING	ALIGNMENT
4453	50.36 R	263+87.68	C/L Spout Springs Road
	12.67	N 36°19'46.0" W	
4449	49.76 R	264+00.44	C/L Spout Springs Road
ARC LENGTH = 185.52			
CHORD BEAR = N 34°27'52.6" W			
LNTH CHORD = 185.49			
RADIUS = 2850.00			
DEGREE = 2°00'37.4"			
4455	43.84 R	265+87.29	C/L Spout Springs Road
	46.18	N 59°49'30.6" E	
DE20352	90.00 R	265+86.01	C/L Spout Springs Road
	199.38	S 24°03'23.9" E	
DE21265	60.00 R	263+86.39	C/L Spout Springs Road
	9.72	S 63°53'15.0" W	
4453	50.36 R	263+87.68	C/L Spout Springs Road
REQD R/W = 5755.23 SF			
REQD R/W = 0.132 ACRES			
REMAINDER = +/- 0.26 ACRES			

DWESWT - PAR49A/SV455 REQ'D DRWY. EASM'T. DE20117

PNT	OFFSET/	STATION/	ALIGNMENT
DE20362	63.91 R	264+10.00	C/L Spout Springs Road
DE20363	82.27 R	265+30.00	C/L Spout Springs Road
DE20364	87.00 R	265+30.00	C/L Spout Springs Road
DE20366	88.00 R	264+55.00	C/L Spout Springs Road
DE20367	100.00 R	264+55.00	C/L Spout Springs Road
DE20368	100.00 R	264+10.00	C/L Spout Springs Road
DE20362	63.91 R	264+10.00	C/L Spout Springs Road

109 WILLIAM TIM JONES AND JULI WYENS JONES
SEE SHEET 21

PESWT - PAR 109/SV321 EASM'T. FOR CONST. AND MAINT. OF SLOPES AND UTILITIES DE20570

PNT	OFFSET/ DIST	STATION/ BEARING	ALIGNMENT
DE20246	110.00 L	252+80.26	C/L Spout Springs Road
	26.56	S 48°05'41.1" E	
4528	94.50 L	252+56.99	C/L Spout Springs Road
	17.38	S 51°20'13.9" W	
DE20233	110.00 L	252+48.50	C/L Spout Springs Road
	17.90	S 51°20'13.9" W	
4531	125.91 L	252+39.55	C/L Spout Springs Road
	41.02	S 56°54'32.4" W	
DE20238	163.88 L	252+22.23	C/L Spout Springs Road
	44.89	N 32°30'58.5" W	
DE20621	180.00 L	252+70.00	C/L Spout Springs Road
	70.60	N 69°50'49.9" E	
DE20246	110.00 L	252+80.26	C/L Spout Springs Road
REQD EASMT = 2606.82 SF			
REQD EASMT = 0.060 ACRES			
REMAINDER = +/- 0.99 ACRES			

STV 100 Years
3700 CRESTWOOD PARKWAY NW, SUITE 800
DULUTH, GEORGIA 30096
PHONE: (770)452-0797 FAX: (770)936-9171

DATE	REVISIONS	DATE	REVISIONS

HALL COUNTY
DEPARTMENT OF PUBLIC WORKS

RIGHT OF WAY DATA

PROJECT NO: 0015280
COUNTY: HALL
LAND LOT NO: N/A
LAND DISTRICT: N/A
GMD: 1419 / 392
DATE 9/28/22 SH 25 OF 46

5/24/2023	GPLOT-V8	0015280_60-26.dgn	SHEET NO.	TOTAL SHEETS
GoCC	gplotborder-V81-P0.tbl	GAWPLN	26	46

REFERENCE POINT	NORTHING	EASTING
PCC 278+20.91	1500278.3039	2383854.1845

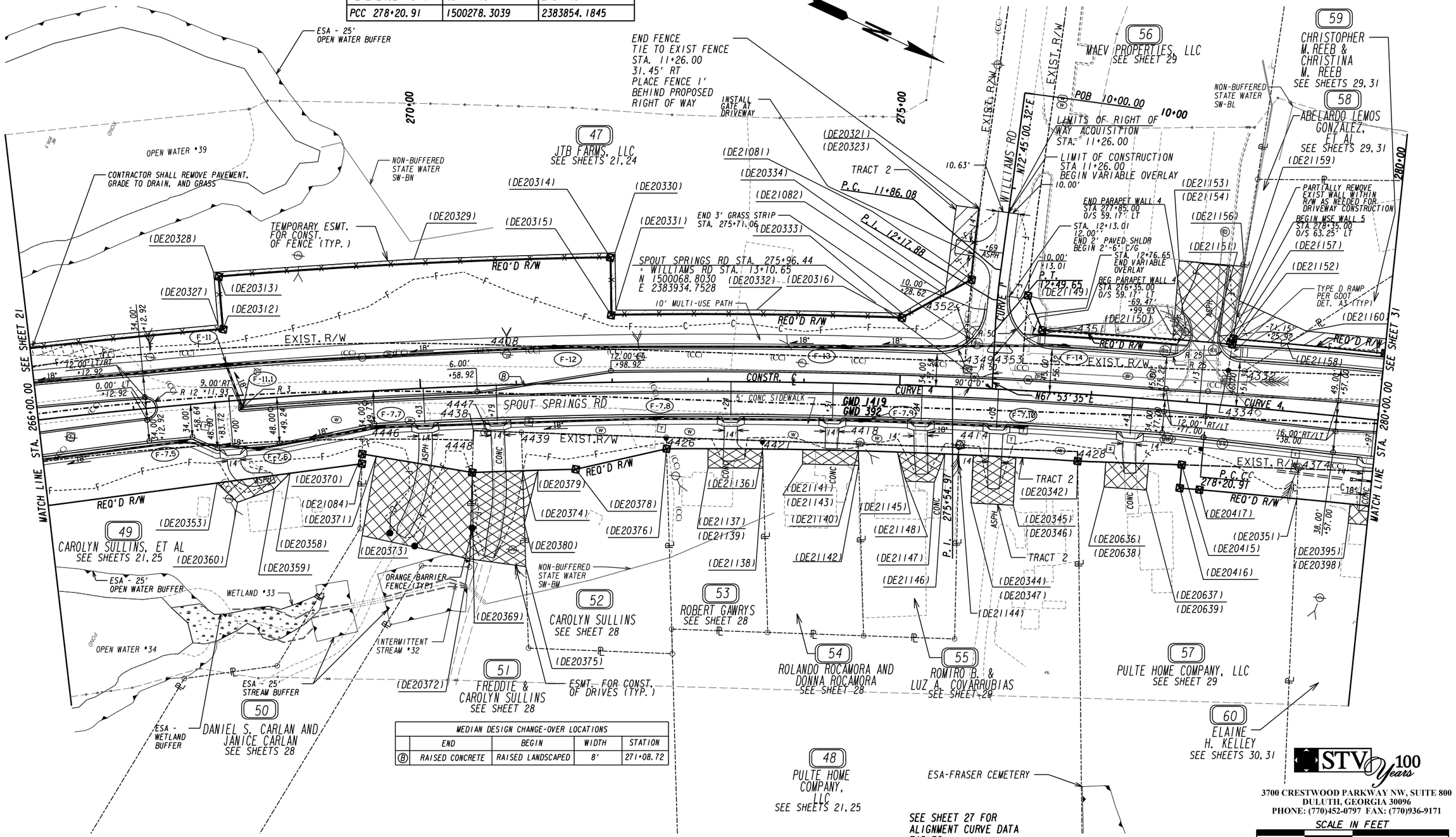

MEDIAN DESIGN CHANGE-OVER LOCATIONS				
	END	BEGIN	WIDTH	STATION
Ⓑ	RAISED CONCRETE	RAISED LANDSCAPED	8'	271+08.72

STV 100 Years
3700 CRESTWOOD PARKWAY NW, SUITE 800
DULUTH, GEORGIA 30096
PHONE: (770)452-0797 FAX: (770)936-9171

SCALE IN FEET
0 50 100 200

PROPERTY AND EXISTING R/W LINE
REQUIRED R/W LINE
CONSTRUCTION LIMITS
EASEMENT FOR CONSTR & MAINTENANCE OF SLOPES AND UTILITIES
EASEMENT FOR CONSTR OF SLOPES
EASEMENT FOR CONSTR OF DRIVES

BEGIN LIMIT OF ACCESS.....BLA
END LIMIT OF ACCESS.....ELA
LIMIT OF ACCESS
REQ'D R/W & LIMIT OF ACCESS
ORANGE BARRIER FENCE
ESA - ENV. SENSITIVE AREA (SEE ERIT TABLE)

DATE	REVISIONS		DATE	REVISIONS

HALL COUNTY
DEPARTMENT OF PUBLIC WORKS

RIGHT OF WAY PLANS

PROJECT NO: 0015280
COUNTY: HALL
LAND LOT NO: N/A
LAND DISTRICT: N/A
GMD: 1419 / 392
DATE 9/28/22 SH 26 OF 46

SPOUT SPRINGS RD

Curve# 4
PI Sta: 268+69.40 (1) PI Sta: 288+06.87 (2)
N: 1499368.4233 (1) N: 1501205.0160 (2)
E: 2384184.6992 (1) E: 2383517.5559 (2)
DELTA: 27°43'28.4" (RT)
D: 00°57'17.75"(1) D: 00°28'38.87"(2)
T: 1653.62(1) T: 2306.90(2)
L: 1919.56(1) L: 1967.50(2)
R: 6000.00(1) R: 12000.00(2)
E: 223.70
e: N/A

WILLAMS ROAD

Curve# 1
PI Sta: 12+17.88
N: 1500033.8780
E: 2383848.7730
DELTA: 04°51'25.2" (LT)
D: 07°38'21.97"
T: 31.81
L: 63.58
R: 750.00
E: 0.67
e: N/A

LITANY CT (SEE SHEET 35)

Curve# 1
PI Sta: 13+62.64
N: 1501070.4310
E: 2383487.1060
DELTA: 02°14'21.0" (LT)
D: 02°51'53.24"
T: 39.09
L: 78.16
R: 2000.00
E: 0.38
e: N/A

STV 100 Years
3700 CRESTWOOD PARKWAY NW, SUITE 800
DULUTH, GEORGIA 30096
PHONE: (770)452-0797 FAX: (770)936-9171

DATE	REVISIONS	DATE	REVISIONS

HALL COUNTY
DEPARTMENT OF PUBLIC WORKS

ALIGNMENT CURVE DATA

PROJECT NO: 0015280
COUNTY: HALL
LAND LOT NO: N/A
LAND DISTRICT: N/A
GMD: 1419 / 392
DATE 9/28/22 SH 27 OF 46

50 DANIEL S. CARLAN AND JANICE CARLAN
SEE SHEET 26

REQD R/W - PAR 50/SV294 REQ'D R/W DE20118

PNT	OFFSET/ DIST	STATION/ BEARING	ALIGNMENT
4446	49.66 R	269+36.57	C/L Spout Springs Road
ARC LENGTH = 115.30			
CHORD BEAR = N 24°28'10.1" W			
LNTH CHORD = 115.30			
RADIUS = 2850.00			
DEGREE = 2°00'37.4"			
4448	56.46 R	270+52.69	C/L Spout Springs Road
	33.61	N 66°35'51.0" E	
DE20369	90.00 R	270+50.37	C/L Spout Springs Road
	116.39	S 15°28'08.4" E	
DE20370	65.00 R	269+35.21	C/L Spout Springs Road
	15.40	S 66°36'43.9" W	
4446	49.66 R	269+36.57	C/L Spout Springs Road

REQD R/W = 2870.01 SF
REQD R/W = 0.066 ACRES
REMAINDER = +/- 1.7 ACRES

DWESWT - PAR 50/SV294 REQ'D DRWY. EASW'T. DE20119

PNT	OFFSET/	STATION/	ALIGNMENT
DE20371	68.35 R	269+50.00	C/L Spout Springs Road
DE20369	90.00 R	270+50.37	C/L Spout Springs Road
DE20372	180.00 R	270+44.01	C/L Spout Springs Road
DE20373	150.00 R	269+30.00	C/L Spout Springs Road
DE20371	68.35 R	269+50.00	C/L Spout Springs Road

51 FREDDIE & CAROLYN SULLINS
SEE SHEET 26

REQD R/W - PAR 51/SV292 REQ'D R/W DE20120

PNT	OFFSET/ DIST	STATION/ BEARING	ALIGNMENT
4438	46.49 R	270+53.38	C/L Spout Springs Road
ARC LENGTH = 14.60			
CHORD BEAR = N 23°09'52.3" W			
LNTH CHORD = 14.60			
RADIUS = 2860.00			
DEGREE = 2°00'12.1"			
4447	47.52 R	270+68.06	C/L Spout Springs Road
	35.40	N 23°01'05.7" W	
4439	49.97 R	271+03.66	C/L Spout Springs Road
	40.03	N 63°06'32.0" E	
DE20374	90.00 R	271+03.72	C/L Spout Springs Road
ARC LENGTH = 52.54			
CHORD BEAR = S 27°04'01.2" E			
LNTH CHORD = 52.54			
RADIUS = 5910.00			
DEGREE = 0°58'10.1"			
DE20369	90.00 R	270+50.37	C/L Spout Springs Road
	33.61	S 66°35'51.0" W	
4448	56.46 R	270+52.69	C/L Spout Springs Road
	10.00	S 66°35'50.9" W	
4438	46.49 R	270+53.38	C/L Spout Springs Road

REQD R/W = 2140.78 SF
REQD R/W = 0.049 ACRES
REMAINDER = +/- 2.8 ACRES

DWESWT - PAR 51/SV292 REQ'D DRWY. EASW'T. DE20121

PNT	OFFSET/	STATION/	ALIGNMENT
DE20369	90.00 R	270+50.37	C/L Spout Springs Road
ARC LENGTH = 52.54			
CHORD BEAR = N 27°04'01.2" W			
LNTH CHORD = 52.54			
RADIUS = 5910.00			
DEGREE = 0°58'10.1"			
DE20374	90.00 R	271+03.72	C/L Spout Springs Road
DE20375	190.00 R	271+03.86	C/L Spout Springs Road
DE20372	180.00 R	270+44.01	C/L Spout Springs Road
DE20369	90.00 R	270+50.37	C/L Spout Springs Road

52 CAROLYN SULLINS
SEE SHEET 26

REQD R/W - PAR 52/SV290 REQ'D R/W DE20122

PNT	OFFSET/ DIST	STATION/ BEARING	ALIGNMENT
4439	49.97 R	271+03.66	C/L Spout Springs Road
	151.18	N 23°01'05.7" W	
4426	58.06 R	272+56.00	C/L Spout Springs Road
	11.94	N 63°23'18.1" E	
DE20376	70.00 R	272+56.26	C/L Spout Springs Road
	97.06	S 37°42'22.0" E	
DE20378	90.00 R	271+60.00	C/L Spout Springs Road
ARC LENGTH = 55.44			
CHORD BEAR = S 26°32'36.8" E			
LNTH CHORD = 55.44			
RADIUS = 5910.00			
DEGREE = 0°58'10.1"			
DE20374	90.00 R	271+03.72	C/L Spout Springs Road
	40.03	S 63°06'32.0" W	
4439	49.97 R	271+03.66	C/L Spout Springs Road

REQD R/W = 4437.42 SF
REQD R/W = 0.102 ACRES
REMAINDER = +/- 0.68 ACRES

PESWT - PAR 52/SV290 EASW'T. FOR CONST. AND MAINT. OF SLOPES AND UTILITIES DE20123

PNT	OFFSET/ DIST	STATION/ BEARING	ALIGNMENT
DE20374	90.00 R	271+03.72	C/L Spout Springs Road
ARC LENGTH = 16.04			
CHORD BEAR = N 26°44'04.4" W			
LNTH CHORD = 16.04			
RADIUS = 5910.00			
DEGREE = 0°58'10.1"			
DE20379	90.00 R	271+20.00	C/L Spout Springs Road
	57.25	N 79°22'44.0" E	
DE20380	145.00 R	271+03.79	C/L Spout Springs Road
	55.00	S 63°06'32.0" W	
DE20374	90.00 R	271+03.72	C/L Spout Springs Road

REQD EASWT = 441.13 SF
REQD EASWT = 0.010 ACRES

53 ROBERT GAWRYS
SEE SHEET 26

REQD R/W - PAR 53/SV281 REQ'D R/W DE20124

PNT	OFFSET/ DIST	STATION/ BEARING	ALIGNMENT
4426	58.06 R	272+56.00	C/L Spout Springs Road
	100.27	N 23°01'05.6" W	
4421	61.31 R	273+57.23	C/L Spout Springs Road
	8.70	N 63°23'18.1" E	
DE21136	70.00 R	273+57.57	C/L Spout Springs Road
ARC LENGTH = 100.12			
CHORD BEAR = S 24°52'18.8" E			
LNTH CHORD = 100.12			
RADIUS = 5930.00			
DEGREE = 0°57'58.3"			
DE20376	70.00 R	272+56.26	C/L Spout Springs Road
	11.94	S 63°23'18.1" W	
4426	58.06 R	272+56.00	C/L Spout Springs Road

REQD R/W = 1018.86 SF
REQD R/W = 0.023 ACRES
REMAINDER = +/- 0.44 ACRES

DWESWT - PAR 53/SV281 REQ'D DRWY. EASW'T. DE20125

PNT	OFFSET/	STATION/	ALIGNMENT
DE21137	70.00 R	273+00.00	C/L Spout Springs Road
ARC LENGTH = 56.89			
CHORD BEAR = N 24°39'47.0" W			
LNTH CHORD = 56.89			
RADIUS = 5930.00			
DEGREE = 0°57'58.3"			
DE21136	70.00 R	273+57.57	C/L Spout Springs Road
DE21138	90.00 R	273+58.36	C/L Spout Springs Road
DE21139	90.00 R	273+00.00	C/L Spout Springs Road
DE21137	70.00 R	273+00.00	C/L Spout Springs Road

54 ROLANDO ROCAMORA AND DONNA ROCAMORA
SEE SHEET 26

REQD R/W - PAR 54/SV280 REQ'D R/W DE20126

PNT	OFFSET/ DIST	STATION/ BEARING	ALIGNMENT
4421	61.31 R	273+57.23	C/L Spout Springs Road
	100.00	N 23°01'05.7" W	
4418	62.86 R	274+58.26	C/L Spout Springs Road
	7.15	N 63°23'18.1" E	
DE21140	70.00 R	274+58.66	C/L Spout Springs Road
ARC LENGTH = 99.92			
CHORD BEAR = S 23°54'19.8" E			
LNTH CHORD = 99.92			
RADIUS = 5930.00			
DEGREE = 0°57'58.3"			
DE21136	70.00 R	273+57.57	C/L Spout Springs Road
	8.70	S 63°23'18.1" W	
4421	61.31 R	273+57.23	C/L Spout Springs Road

REQD R/W = 776.85 SF
REQD R/W = 0.018 ACRES
REMAINDER = +/- 0.44 ACRES

DWESWT - PAR 54/SV280 REQ'D DRWY. EASW'T. DE20127

PNT	OFFSET/	STATION/	ALIGNMENT
DE21141	70.00 R	274+00.00	C/L Spout Springs Road
ARC LENGTH = 57.98			
CHORD BEAR = N 23°42'10.4" W			
LNTH CHORD = 57.98			
RADIUS = 5930.00			
DEGREE = 0°57'58.3"			
DE21140	70.00 R	274+58.66	C/L Spout Springs Road
DE21142	85.00 R	274+59.51	C/L Spout Springs Road
DE21143	85.00 R	274+00.00	C/L Spout Springs Road
DE21141	70.00 R	274+00.00	C/L Spout Springs Road

STV 100 Years
3700 CRESTWOOD PARKWAY NW, SUITE 800
DULUTH, GEORGIA 30096
PHONE: (770)452-0797 FAX: (770)936-9171

DATE	REVISIONS	DATE	REVISIONS

HALL COUNTY
DEPARTMENT OF PUBLIC WORKS

RIGHT OF WAY DATA

PROJECT NO: 0015280
COUNTY: HALL
LAND LOT NO: N/A
LAND DISTRICT: N/A
GMD: 1419 / 392
DATE 9/28/22 SH 28 OF 46

55 ROMIRO B. & LUZ A. COVARRUBIAS
SEE SHEET 26

REQD R/W - PAR 55/SV279 REQ'D R/W DE20128

PNT	OFFSET/ DIST	STATION/ BEARING	ALIGNMENT
4418	62.86 R	274+58.26	C/L Spout Springs Road
	105.00	N 23°01'05.7" W	
4414	62.68 R	275+64.37	C/L Spout Springs Road
	7.32	N 66°15'15.1" E	
DE21144	70.00 R	275+64.55	C/L Spout Springs Road

ARC LENGTH = 104.65
CHORD BEAR = S 22°55'02.1" E
LNTH CHORD = 104.65
RADIUS = 5930.00
DEGREE = 0°57'58.3"

DE21140	70.00 R	274+58.66	C/L Spout Springs Road
	7.15	S 63°23'18.1" W	
4418	62.86 R	274+58.26	C/L Spout Springs Road

REQD R/W = 741.46 SF
REQD R/W = 0.017 ACRES
REMAINDER = +/- 0.44 ACRES

DWESWT - PAR 55/SV279 REQ'D DRWY. EASW'T. DE20129

PNT	OFFSET/	STATION/	ALIGNMENT
DE21145	70.00 R	275+00.00	C/L Spout Springs Road

ARC LENGTH = 49.42
CHORD BEAR = N 22°47'11.4" W
LNTH CHORD = 49.42
RADIUS = 5930.00
DEGREE = 0°57'58.3"

DE21146	70.00 R	275+50.00	C/L Spout Springs Road
DE21147	100.00 R	275+40.00	C/L Spout Springs Road
DE21148	100.00 R	275+10.00	C/L Spout Springs Road
DE21145	70.00 R	275+00.00	C/L Spout Springs Road

56 MAEV PROPERTIES, LLC
SEE SHEET 26

REQD R/W - PAR 56/SV316 REQ'D R/W DE20130

PNT	OFFSET/ DIST	STATION/ BEARING	ALIGNMENT
4334	36.60 L	278+40.02	C/L Spout Springs Road
	214.73	S 23°01'05.7" E	
4353	28.31 L	276+26.54	C/L Spout Springs Road
	25.00	S 69°11'17.3" W	
4351	30.80 L	12+57.43	Williams Road

ARC LENGTH = 45.78
CHORD BEAR = S 69°44'38.6" W
LNTH CHORD = 45.78
RADIUS = 2359.25
DEGREE = 2°25'42.8"

DE21149	31.28 L	12+10.00	Williams Road
	38.98	N 42°22'19.0" E	
DE21150	64.00 L	276+45.00	C/L Spout Springs Road

ARC LENGTH = 177.79
CHORD BEAR = N 20°48'12.6" W
LNTH CHORD = 177.78
RADIUS = 6064.00
DEGREE = 0°56'41.5"

DE21151	64.00 L	278+20.91	C/L Spout Springs Road

ARC LENGTH = 20.93
CHORD BEAR = N 19°54'49.9" W
LNTH CHORD = 20.93
RADIUS = 12064.00
DEGREE = 0°28'29.8"

DE21152	64.00 L	278+41.74	C/L Spout Springs Road
	27.45	N 73°43'44.8" E	
4334	36.60 L	278+40.02	C/L Spout Springs Road

REQD R/W = 7251.03 SF
REQD R/W = 0.166 ACRES
REMAINDER = +/- 2.6 ACRES

DWESWT - PAR 56/SV316 REQ'D DRWY. EASW'T. DE20131

PNT	OFFSET/	STATION/	ALIGNMENT
DE21152	64.00 L	278+41.74	C/L Spout Springs Road

ARC LENGTH = 20.93
CHORD BEAR = S 19°54'49.9" E
LNTH CHORD = 20.93
RADIUS = 12064.00
DEGREE = 0°28'29.8"

DE21151	64.00 L	278+20.91	C/L Spout Springs Road

ARC LENGTH = 41.35
CHORD BEAR = S 20°09'32.1" E
LNTH CHORD = 41.35
RADIUS = 6064.00
DEGREE = 0°56'41.5"

DE21153	64.00 L	277+80.00	C/L Spout Springs Road
DE21154	146.00 L	277+80.00	C/L Spout Springs Road
DE21156	146.01 L	278+46.83	C/L Spout Springs Road
DE21152	64.00 L	278+41.74	C/L Spout Springs Road

57 PULTE HOME COMPANY, LLC
SEE SHEET 26

REQD R/W - PAR 57/SV277 REQ'D R/W DE20132

PNT	OFFSET/ DIST	STATION/ BEARING	ALIGNMENT
DE20415	65.65 R	278+00.00	C/L Spout Springs Road
	121.50	N 23°01'05.7" W	
4374	58.78 R	279+22.06	C/L Spout Springs Road
	31.26	N 67°25'56.3" E	
DE20351	90.00 R	279+23.75	C/L Spout Springs Road

ARC LENGTH = 102.07
CHORD BEAR = S 19°43'05.0" E
LNTH CHORD = 102.07
RADIUS = 11910.00
DEGREE = 0°28'51.9"

DE20417	90.00 R	278+20.91	C/L Spout Springs Road

ARC LENGTH = 20.60
CHORD BEAR = S 20°03'48.3" E
LNTH CHORD = 20.60
RADIUS = 5910.00
DEGREE = 0°58'10.1"

DE20416	90.00 R	278+00.00	C/L Spout Springs Road
	24.35	S 69°50'12.2" W	
DE20415	65.65 R	278+00.00	C/L Spout Springs Road

REQD R/W = 3378.77 SF
REQD R/W = 0.078 ACRES
REMAINDER = +/- 3.0 ACRES

DWESWT - PAR 57/SV277 REQ'D DRWY. EASW'T. DE20133

PNT	OFFSET/	STATION/	ALIGNMENT
DE20636	69.06 R	277+20.00	C/L Spout Springs Road
DE20637	67.27 R	277+65.00	C/L Spout Springs Road
DE20639	95.00 R	277+65.00	C/L Spout Springs Road
DE20638	95.00 R	277+20.00	C/L Spout Springs Road
DE20636	69.06 R	277+20.00	C/L Spout Springs Road

58 ABELARDO LEMOS GONZALEZ, ET AL
SEE SHEETS 26, 31

REQD R/W - PAR 58/SV313 REQ'D R/W DE20134

PNT	OFFSET/ DIST	STATION/ BEARING	ALIGNMENT
4332	37.55 L	278+56.95	C/L Spout Springs Road
	17.01	S 23°01'05.7" E	
4334	36.60 L	278+40.02	C/L Spout Springs Road
	33.46	S 73°43'44.8" W	
DE21157	70.00 L	278+42.11	C/L Spout Springs Road

ARC LENGTH = 56.33
CHORD BEAR = N 19°43'43.2" W
LNTH CHORD = 56.33
RADIUS = 12070.00
DEGREE = 0°28'28.9"

DE21158	70.00 L	278+98.12	C/L Spout Springs Road
	52.57	S 57°49'10.7" E	
4332	37.55 L	278+56.95	C/L Spout Springs Road

REQD R/W = 1197.20 SF
REQD R/W = 0.027 ACRES
REMAINDER = +/- 0.64 ACRES

PESWT - PAR 58/SV313 EASW'T. FOR CONST. AND MAINT. OF SLOPES AND UTILITIES DE20567

PNT	OFFSET/ DIST	STATION/ BEARING	ALIGNMENT
DE21158	70.00 L	278+98.12	C/L Spout Springs Road

ARC LENGTH = 56.33
CHORD BEAR = S 19°43'43.2" E
LNTH CHORD = 56.33
RADIUS = 12070.00
DEGREE = 0°28'28.9"

DE21157	70.00 L	278+42.11	C/L Spout Springs Road
	40.08	S 73°43'44.8" W	
DE21159	110.00 L	278+44.60	C/L Spout Springs Road
	77.16	N 0°46'10.6" W	
DE21160	85.00 L	279+17.00	C/L Spout Springs Road
	24.21	S 57°49'10.7" E	
DE21158	70.00 L	278+98.12	C/L Spout Springs Road

REQD EASWT = 1909.46 SF
REQD EASWT = 0.044 ACRES

59 CHRISTOPHER M. REEB & CHRISTINA M. REEB
SEE SHEETS 26, 31

REQD R/W - PAR 59/SV312 REQ'D R/W DE20135

PNT	OFFSET/ DIST	STATION/ BEARING	ALIGNMENT
4329	56.14 L	281+30.07	C/L Spout Springs Road
	274.81	S 23°01'05.7" E	
4332	37.55 L	278+56.95	C/L Spout Springs Road
	52.57	N 57°49'10.7" W	
DE21158	70.00 L	278+98.12	C/L Spout Springs Road

ARC LENGTH = 102.48
CHORD BEAR = N 19°21'06.2" W
LNTH CHORD = 102.48
RADIUS = 12070.00
DEGREE = 0°28'28.9"

DE20391	70.00 L	280+00.00	C/L Spout Springs Road
	131.03	N 14°25'17.0" W	
DE20392	60.00 L	281+29.95	C/L Spout Springs Road
	3.86	N 69°35'39.3" E	
4329	56.14 L	281+30.07	C/L Spout Springs Road

REQD R/W = 5156.59 SF
REQD R/W = 0.118 ACRES
REMAINDER = +/- 0.47 ACRES

PESWT - PAR 59/SV312 EASW'T. FOR CONST. AND MAINT. OF SLOPES AND UTILITIES DE20565

PNT	OFFSET/ DIST	STATION/ BEARING	ALIGNMENT
DE20392	60.00 L	281+29.95	C/L Spout Springs Road
	131.03	S 14°25'17.0" E	
DE20391	70.00 L	280+00.00	C/L Spout Springs Road

ARC LENGTH = 102.48
CHORD BEAR = S 19°21'06.2" E
LNTH CHORD = 102.48
RADIUS = 12070.00
DEGREE = 0°28'28.9"

DE21158	70.00 L	278+98.12	C/L Spout Springs Road
	24.21	N 57°49'10.7" W	
DE21160	85.00 L	279+17.01	C/L Spout Springs Road
	83.58	N 19°18'29.9" W	
DE21161	85.00 L	280+00.00	C/L Spout Springs Road
	130.26	N 16°36'00.4" W	
DE21162	80.00 L	281+29.28	C/L Spout Springs Road
	20.01	N 69°35'39.3" E	
DE20392	60.00 L	281+29.95	C/L Spout Springs Road

REQD EASWT = 3671.21 SF
REQD EASWT = 0.084 ACRES

STV 100 Years
3700 CRESTWOOD PARKWAY NW, SUITE 800
DULUTH, GEORGIA 30096
PHONE: (770)452-0797 FAX: (770)936-9171

DATE	REVISIONS	DATE	REVISIONS

HALL COUNTY
DEPARTMENT OF PUBLIC WORKS

RIGHT OF WAY DATA

PROJECT NO: 0015280
COUNTY: HALL
LAND LOT NO: N/A
LAND DISTRICT: N/A
GMD: 1419 / 392
DATE 9/28/22 SH 29 OF 46

60 ELAINE H KELLEY
SEE SHEETS 26, 31

REQD R/W - PAR 60/SV276 REQ'D R/W DE20136

PNT	OFFSET/ DIST	STATION/ BEARING	ALIGNMENT
4374	58.78 R	279+22.06	C/L Spout Springs Road
	316.36	N 23°01'05.7" W	
4370	35.10 R	282+38.78	C/L Spout Springs Road
	54.94	N 69°55'54.0" E	
DE20393	90.00 R	282+40.81	C/L Spout Springs Road

ARC LENGTH = 314.68
CHORD BEAR = S 18°42'56.3" E
LNTH CHORD = 314.67
RADIUS = 11910.00
DEGREE = 0°28'51.9"

DE20351	90.00 R	279+23.75	C/L Spout Springs Road
	31.26	S 67°25'56.3" W	
4374	58.78 R	279+22.06	C/L Spout Springs Road

REQD R/W = 13368.37 SF
REQD R/W = 0.307 ACRES
REMAINDER = +/- 5.0 ACRES

DWESWT - PAR 60/SV276 REQ'D DRWY. EASM'T. DE20137

PNT	OFFSET/	STATION/	ALIGNMENT
DE20395	90.00 R	279+80.00	C/L Spout Springs Road

ARC LENGTH = 39.70
CHORD BEAR = N 19°06'30.6" W
LNTH CHORD = 39.70
RADIUS = 11910.00
DEGREE = 0°28'51.9"

DE20394	90.00 R	280+20.00	C/L Spout Springs Road
DE20397	110.00 R	280+20.00	C/L Spout Springs Road
DE20398	110.00 R	279+80.00	C/L Spout Springs Road
DE20395	90.00 R	279+80.00	C/L Spout Springs Road

STV 100 Years
3700 CRESTWOOD PARKWAY NW, SUITE 800
DULUTH, GEORGIA 30096
PHONE: (770)452-0797 FAX: (770)936-9171

DATE	REVISIONS	DATE	REVISIONS

HALL COUNTY
DEPARTMENT OF PUBLIC WORKS

RIGHT OF WAY DATA

PROJECT NO: 0015280
COUNTY: HALL
LAND LOT NO: N/A
LAND DISTRICT: N/A
GMD: 1419 / 392
DATE 9/28/22 SH 30 OF 46

5/24/2023	GPLOT-V8	0015280_60-31.dgn	SHEET NO.	TOTAL SHEETS
GoCC	gplotborder-V81-P0.tbl	GRWPLN	31	46

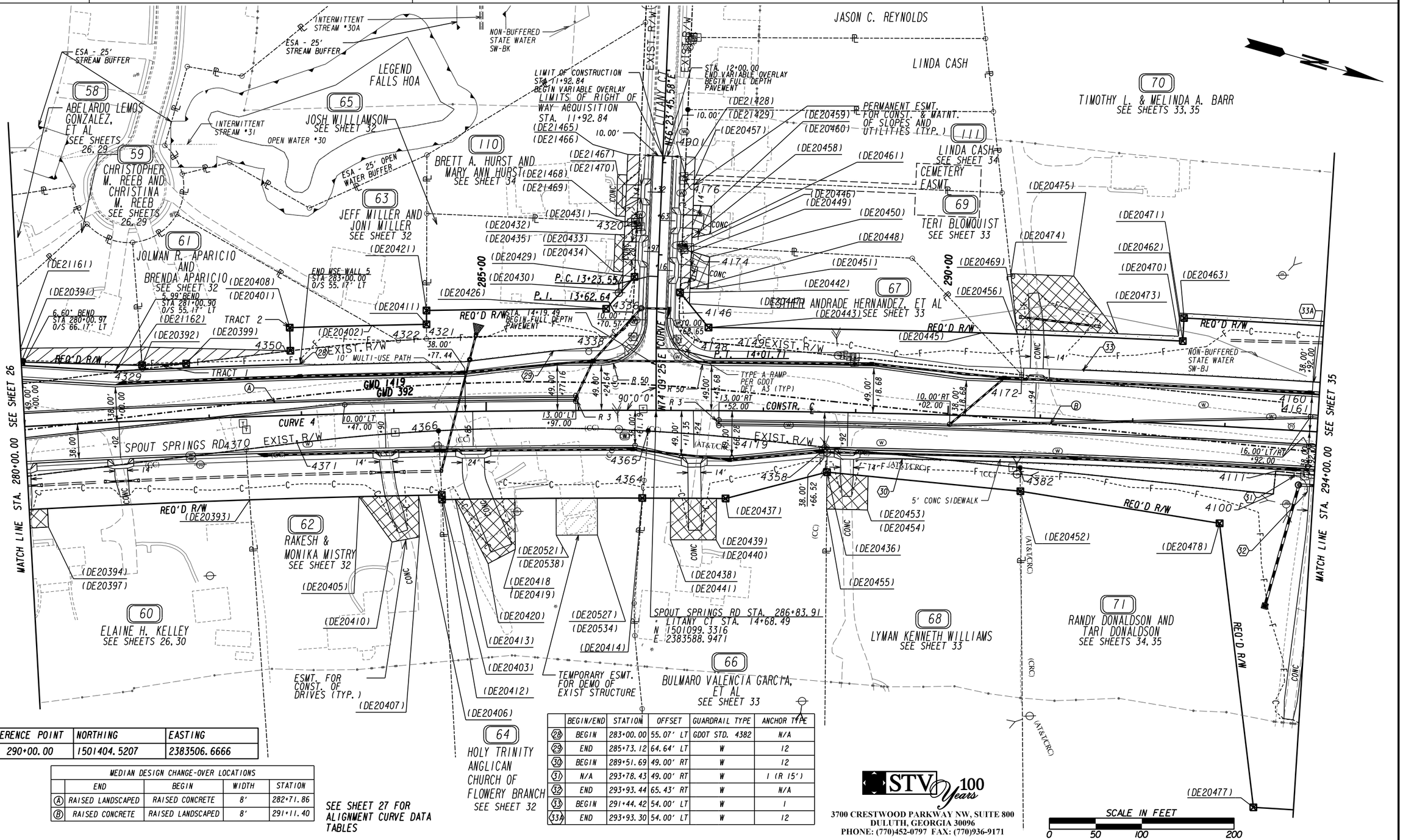

REFERENCE POINT	NORTHING	EASTING
STA 290+00.00	1501404.5207	2383506.6666

MEDIAN DESIGN CHANGE-OVER LOCATIONS

	END	BEGIN	WIDTH	STATION
Ⓐ	RAISED LANDSCAPED	RAISED CONCRETE	8'	282+71.86
Ⓑ	RAISED CONCRETE	RAISED LANDSCAPED	8'	291+11.40

SEE SHEET 27 FOR ALIGNMENT CURVE DATA TABLES

	BEGIN/END	STATION	OFFSET	GUARDRAIL TYPE	ANCHOR TYPE
28	BEGIN	283+00.00	55.07' LT	GDOT STD. 4382	N/A
29	END	285+73.12	64.64' LT	W	12
30	BEGIN	289+51.69	49.00' RT	W	12
31	N/A	293+78.43	49.00' RT	W	1 (R 15')
32	END	293+93.44	65.43' RT	W	N/A
33	BEGIN	291+44.42	54.00' LT	W	1
33A	END	293+93.30	54.00' LT	W	12

STV 100 Years
3700 CRESTWOOD PARKWAY NW, SUITE 800
DULUTH, GEORGIA 30096
PHONE: (770)452-0797 FAX: (770)936-9171

PROPERTY AND EXISTING R/W LINE
REQUIRED R/W LINE
CONSTRUCTION LIMITS
EASEMENT FOR CONSTR & MAINTENANCE OF SLOPES AND UTILITIES
EASEMENT FOR CONSTR OF SLOPES
EASEMENT FOR CONSTR OF DRIVES

BEGIN LIMIT OF ACCESS.....BLA
END LIMIT OF ACCESS.....ELA
LIMIT OF ACCESS
REQ'D R/W & LIMIT OF ACCESS
ORANGE BARRIER FENCE
ESA - ENV. SENSITIVE AREA (SEE ERIT TABLE)

DATE	REVISIONS	DATE	REVISIONS

HALL COUNTY
DEPARTMENT OF PUBLIC WORKS

RIGHT OF WAY PLANS

PROJECT NO: 0015280
COUNTY: HALL
LAND LOT NO: N/A
LAND DISTRICT: N/A
GMD: 1419 / 392
DATE 9/28/22 SH 31 OF 46

61 JOLMAN R. APARICIO AND BRENDA APARICIO
SEE SHEET 31

REQD - PAR 61/SV311 - TRACT 1 REQ'D R/W DE20568

PNT	OFFSET/ DIST	STATION/ BEARING	ALIGNMENT
DE20399	60.00 L	281+77.40	C/L Spout Springs Road
	47.71	S 23°01'05.7" E	
4329	56.14 L	281+30.07	C/L Spout Springs Road
	3.86	S 69°35'39.3" W	
DE20392	60.00 L	281+29.95	C/L Spout Springs Road
	47.69	N 18°22'29.2" W	
DE20399	60.00 L	281+77.40	C/L Spout Springs Road

REQD R/W = 92.10 SF
REQD R/W = 0.002 ACRES
REMAINDER = +/- 0.53 ACRES

REQD R/W - PAR 61/SV311 - TRACT 2 REQ'D R/W DE20138

PNT	OFFSET/ DIST	STATION/ BEARING	ALIGNMENT
4322	78.04 L	284+06.42	C/L Spout Springs Road

ARC LENGTH = 117.43
CHORD BEAR = S 21°23'41.4" E
LNTH CHORD = 117.41
RADIUS = 2250.00
DEGREE = 2°32'47.3"

DE20408	69.95 L	282+90.00	C/L Spout Springs Road
	25.05	S 72°16'34.1" W	
DE20401	95.00 L	282+90.00	C/L Spout Springs Road

ARC LENGTH = 89.00
CHORD BEAR = N 17°30'46.9" W
LNTH CHORD = 89.00
RADIUS = 12095.00
DEGREE = 0°28'25.4"

DE20402	95.00 L	283+78.30	C/L Spout Springs Road
	33.01	N 13°41'30.2" E	
4322	78.04 L	284+06.42	C/L Spout Springs Road

REQD R/W = 2173.50 SF
REQD R/W = 0.050 ACRES

PESMT - PAR 61/SV311 EASM'T. FOR CONST. AND MAINT. OF SLOPES AND UTILITIES DE20556

PNT	OFFSET/ DIST	STATION/ BEARING	ALIGNMENT
DE20408	69.95 L	282+90.00	C/L Spout Springs Road

ARC LENGTH = 5.04
CHORD BEAR = S 22°57'14.7" E
LNTH CHORD = 5.04
RADIUS = 2250.00
DEGREE = 2°32'47.3"

4350	69.49 L	282+85.01	C/L Spout Springs Road
	108.61	S 23°01'05.7" E	
DE20399	60.00 L	281+77.40	C/L Spout Springs Road

ARC LENGTH = 47.69
CHORD BEAR = S 18°22'29.2" E
LNTH CHORD = 47.69
RADIUS = 12060.00
DEGREE = 0°28'30.3"

DE20392	60.00 L	281+29.95	C/L Spout Springs Road
	20.01	S 69°35'39.3" W	
DE21162	80.00 L	281+29.28	C/L Spout Springs Road
	162.03	N 14°33'06.1" W	
DE20408	69.95 L	282+90.00	C/L Spout Springs Road

REQD EASMT = 1830.98 SF
REQD EASMT = 0.042 ACRES

62 RAKESH & MONIKA MISTRY
SEE SHEET 31

REQD R/W - PAR 62/SV275 REQ'D R/W DE20139

PNT	OFFSET/ DIST	STATION/ BEARING	ALIGNMENT
4370	35.10 R	282+38.78	C/L Spout Springs Road
	55.52	N 23°01'05.7" W	
4371	30.08 R	282+94.22	C/L Spout Springs Road

ARC LENGTH = 153.71
CHORD BEAR = N 20°58'12.6" W
LNTH CHORD = 153.67
RADIUS = 2150.00
DEGREE = 2°39'53.7"

4366	20.34 R	284+47.91	C/L Spout Springs Road
	69.70	N 71°01'02.0" E	
DE20403	90.00 R	284+50.38	C/L Spout Springs Road

ARC LENGTH = 208.00
CHORD BEAR = S 17°27'30.3" E
LNTH CHORD = 208.00
RADIUS = 11910.00
DEGREE = 0°28'51.9"

DE20393	90.00 R	282+40.81	C/L Spout Springs Road
	54.94	S 69°55'54.0" W	
4370	35.10 R	282+38.78	C/L Spout Springs Road

REQD R/W = 13220.34 SF
REQD R/W = 0.303 ACRES
REMAINDER = +/- 3.9 ACRES

DWESMT - PAR 62/SV275 REQ'D DRWY. EASM'T. DE20140

PNT	OFFSET/	STATION/	ALIGNMENT
DE20405	90.00 R	283+60.00	C/L Spout Springs Road

ARC LENGTH = 64.51
CHORD BEAR = N 17°14'04.0" W
LNTH CHORD = 64.51
RADIUS = 11910.00
DEGREE = 0°28'51.9"

DE20406	90.00 R	284+25.00	C/L Spout Springs Road
DE20407	135.00 R	284+25.00	C/L Spout Springs Road
DE20410	140.00 R	283+95.00	C/L Spout Springs Road
DE20405	90.00 R	283+60.00	C/L Spout Springs Road

63 JEFF MILLER AND JONI MILLER
SEE SHEET 31

REQD R/W - PAR 63/SV310 REQ'D R/W DE20141

PNT	OFFSET/ DIST	STATION/ BEARING	ALIGNMENT
4321	79.32 L	284+36.71	C/L Spout Springs Road

ARC LENGTH = 30.51
CHORD BEAR = S 19°30'40.3" E
LNTH CHORD = 30.51
RADIUS = 2250.00
DEGREE = 2°32'47.3"

4322	78.04 L	284+06.42	C/L Spout Springs Road
	33.01	S 13°41'30.2" W	
DE20402	95.00 L	283+78.30	C/L Spout Springs Road

ARC LENGTH = 59.18
CHORD BEAR = N 17°09'43.4" W
LNTH CHORD = 59.18
RADIUS = 12095.00
DEGREE = 0°28'25.4"

DE20411	95.00 L	284+37.02	C/L Spout Springs Road
	15.68	N 74°08'48.3" E	
4321	79.32 L	284+36.71	C/L Spout Springs Road

REQD R/W = 740.06 SF
REQD R/W = 0.017 ACRES
REMAINDER = +/- 0.68 ACRES

64 HOLY TRINITY ANGLICAN CHURCH OF FLOWERY BRANCH
SEE SHEET 31

REQD R/W - PAR 64/SV274 REQ'D R/W DE20142

PNT	OFFSET/ DIST	STATION/ BEARING	ALIGNMENT
4366	20.34 R	284+47.91	C/L Spout Springs Road

ARC LENGTH = 227.11
CHORD BEAR = N 15°53'45.4" W
LNTH CHORD = 227.00
RADIUS = 2150.00
DEGREE = 2°39'53.7"

4365	22.45 R	286+75.31	C/L Spout Springs Road
	53.58	N 78°39'40.0" E	
4364	75.86 R	286+71.04	C/L Spout Springs Road
	19.20	N 78°39'40.0" E	
DE20414	95.00 R	286+69.50	C/L Spout Springs Road

ARC LENGTH = 217.21
CHORD BEAR = S 16°26'04.4" E
LNTH CHORD = 217.21
RADIUS = 11905.00
DEGREE = 0°28'52.6"

DE20412	95.00 R	284+50.55	C/L Spout Springs Road
	74.70	S 71°01'02.0" W	
4366	20.34 R	284+47.91	C/L Spout Springs Road

REQD R/W = 16722.03 SF
REQD R/W = 0.384 ACRES
REMAINDER = +/- 7.1 ACRES

TESMT - PAR 64/SV274 EASM'T. FOR DEMO OF EXISTING STRUCTURE DE20597

PNT	OFFSET/	STATION/	ALIGNMENT
DE20521	95.00 R	285+75.00	C/L Spout Springs Road
DE20527	95.00 R	286+20.00	C/L Spout Springs Road
DE20534	135.00 R	286+20.00	C/L Spout Springs Road
DE20538	135.00 R	285+75.00	C/L Spout Springs Road
DE20521	95.00 R	285+75.00	C/L Spout Springs Road

REQD EASMT AREA = 1782.75 SF

DWESMT - PAR 64/SV274 REQ'D DRWY. EASM'T. DE20560

PNT	OFFSET/	STATION/	ALIGNMENT
DE20413	95.00 R	284+65.00	C/L Spout Springs Road

ARC LENGTH = 64.49
CHORD BEAR = N 16°43'59.2" W
LNTH CHORD = 64.49
RADIUS = 11905.00
DEGREE = 0°28'52.6"

DE20418	95.00 R	285+30.00	C/L Spout Springs Road
DE20419	150.00 R	285+30.00	C/L Spout Springs Road
DE20420	165.00 R	285+00.00	C/L Spout Springs Road
DE20413	95.00 R	284+65.00	C/L Spout Springs Road

65 JOSH WILLIAMSON
SEE SHEET 31

REQD R/W - PAR 65/SV308 REQ'D R/W DE20143

PNT	OFFSET/ DIST	STATION/ BEARING	ALIGNMENT
DE20429	25.27 R	13+25.00	Litany Court
	36.17	N 76°28'46.1" E	
4336	25.67 R	13+60.71	Litany Court

ARC LENGTH = 46.76
CHORD BEAR = S 58°51'59.6" E
LNTH CHORD = 42.17
RADIUS = 30.00
DEGREE = 190°59'09.4"

4338	56.12 R	13+89.31	Litany Court

ARC LENGTH = 192.82
CHORD BEAR = S 16°40'03.5" E
LNTH CHORD = 192.76
RADIUS = 2250.00
DEGREE = 2°32'47.3"

4321	79.32 L	284+36.71	C/L Spout Springs Road
	30.68	S 74°08'48.3" W	
DE20421	110.00 L	284+37.33	C/L Spout Springs Road

ARC LENGTH = 194.44
CHORD BEAR = N 16°33'37.6" W
LNTH CHORD = 194.44
RADIUS = 12110.00
DEGREE = 0°28'23.7"

DE20426	110.00 L	286+30.00	C/L Spout Springs Road
	46.17	N 64°18'25.0" W	
DE20429	25.27 R	13+25.00	Litany Court

REQD R/W = 6912.98 SF
REQD R/W = 0.159 ACRES
REMAINDER = +/- 0.50 ACRES

PESMT - PAR 65/SV308 EASM'T. FOR CONST. AND MAINT. OF SLOPES AND UTILITIES DE20144

PNT	OFFSET/ DIST	STATION/ BEARING	ALIGNMENT
4320	25.19 R	12+65.99	Litany Court
	59.03	N 76°28'46.1" E	
DE20429	25.27 R	13+25.00	Litany Court
	19.99	S 64°18'25.0" E	
DE20430	38.00 R	13+40.17	Litany Court
	74.50	S 76°22'07.3" W	
DE20431	37.97 R	12+65.99	Litany Court
	12.78	N 13°35'20.7" W	
4320	25.19 R	12+65.99	Litany Court

REQD EASMT = 848.91 SF
REQD EASMT = 0.019 ACRES

DWESMT - PAR 65/SV308 REQ'D DRWY. EASM'T. DE20145

PNT	OFFSET/	STATION/	ALIGNMENT
DE20432	37.96 R	12+80.00	Litany Court
DE20433	37.94 R	13+20.00	Litany Court
DE20434	48.00 R	13+20.00	Litany Court
DE20435	48.00 R	12+80.00	Litany Court
DE20432	37.96 R	12+80.00	Litany Court

STV 100 Years
3700 CRESTWOOD PARKWAY NW, SUITE 800
DULUTH, GEORGIA 30096
PHONE: (770)452-0797 FAX: (770)936-9171

DATE	REVISIONS	DATE	REVISIONS

HALL COUNTY
DEPARTMENT OF PUBLIC WORKS

RIGHT OF WAY DATA

PROJECT NO: 0015280
COUNTY: HALL
LAND LOT NO: N/A
LAND DISTRICT: N/A
GMD: 1419 / 392
DATE 9/28/22 SH 32 OF 46

66 BULMARO VALENCIA GARCIA, ET AL
SEE SHEET 31

REQD R/W - PAR 66/SV273 REQ'D R/W DE20146

PNT	OFFSET/ DIST	STATION/ BEARING	ALIGNMENT
4365	22.45 R	286+75.31	C/L Spout Springs Road
ARC LENGTH = 107.09			
CHORD BEAR = N 11°26'34.3" W			
LNTH CHORD = 107.08			
RADIUS = 2150.00			
DEGREE = 2°39'53.7"			
4119	30.26 R	287+82.34	C/L Spout Springs Road
	87.55	N 10°00'57.3" W	
4358	38.12 R	288+69.78	C/L Spout Springs Road
	26.88	N 74°27'52.6" E	
DE20436	65.00 R	288+70.06	C/L Spout Springs Road
	113.37	S 30°33'42.8" E	
DE20437	95.00 R	287+60.00	C/L Spout Springs Road
ARC LENGTH = 89.78			
CHORD BEAR = S 15°41'45.0" E			
LNTH CHORD = 89.78			
RADIUS = 11905.00			
DEGREE = 0°28'52.6"			
DE20414	95.00 R	286+69.50	C/L Spout Springs Road
	19.20	S 78°39'40.0" W	
4364	75.86 R	286+71.04	C/L Spout Springs Road
	53.58	S 78°39'40.0" W	
4365	22.45 R	286+75.31	C/L Spout Springs Road
REQD R/W = 11225.30 SF			
REQD R/W = 0.258 ACRES			
REMAINDER = +/- 1.7 ACRES			

DWESMT - PAR 66/SV273 REQ'D DRWY. EASM'T. DE20147

PNT	OFFSET/	STATION/	ALIGNMENT
DE20438	95.00 R	287+00.00	C/L Spout Springs Road
ARC LENGTH = 49.60			
CHORD BEAR = N 15°38'48.8" W			
LNTH CHORD = 49.60			
RADIUS = 11905.00			
DEGREE = 0°28'52.6"			
DE20439	95.00 R	287+50.00	C/L Spout Springs Road
DE20440	140.00 R	287+50.00	C/L Spout Springs Road
DE20441	140.00 R	287+00.00	C/L Spout Springs Road
DE20438	95.00 R	287+00.00	C/L Spout Springs Road

67 ESTHER ANDRADE HERNANDEZ, ET AL
SEE SHEET 31

REQD R/W - PAR 67/SV255 REQ'D R/W DE20148

PNT	OFFSET/ DIST	STATION/ BEARING	ALIGNMENT
4172	45.99 L	290+78.21	C/L Spout Springs Road
	288.89	S 10°00'57.3" E	
4149	69.30 L	287+91.63	C/L Spout Springs Road
ARC LENGTH = 56.23			
CHORD BEAR = S 10°43'54.8" E			
LNTH CHORD = 56.23			
RADIUS = 2250.00			
DEGREE = 2°32'47.3"			
4148	52.32 L	13+94.47	Litany Court
ARC LENGTH = 46.04			
CHORD BEAR = S 32°30'56.9" W			
LNTH CHORD = 41.65			
RADIUS = 30.00			
DEGREE = 190°59'09.4"			
4146	24.29 L	13+63.06	Litany Court
	22.78	S 76°28'46.1" W	
DE20442	24.64 L	13+40.00	Litany Court
	48.88	N 34°54'06.8" E	
DE20443	90.00 L	287+40.00	C/L Spout Springs Road
ARC LENGTH = 296.51			
CHORD BEAR = N 14°52'21.6" W			
LNTH CHORD = 296.50			
RADIUS = 12090.00			
DEGREE = 0°28'26.1"			
DE20445	90.00 L	290+34.30	C/L Spout Springs Road
	62.34	N 30°50'21.3" E	
4172	45.99 L	290+78.21	C/L Spout Springs Road
REQD R/W = 10411.31 SF			
REQD R/W = 0.239 ACRES			
REMAINDER = +/- 0.53 ACRES			

PESMT - PAR 67/SV255 EASM'T. FOR CONST. AND MAINT. OF SLOPES AND UTILITIES DE20149

PNT	OFFSET/ DIST	STATION/ BEARING	ALIGNMENT
DE20442	24.64 L	13+40.00	Litany Court
	50.82	S 76°28'46.0" W	
4174	24.78 L	12+88.98	Litany Court
	10.35	N 12°51'11.5" W	
DE20446	35.13 L	12+89.11	Litany Court
	62.55	N 76°19'16.9" E	
DE20447	35.01 L	13+52.17	Litany Court
	15.85	S 34°53'55.5" W	
DE20442	24.64 L	13+40.00	Litany Court
REQD EASMT = 590.79 SF			
REQD EASMT = 0.014 ACRES			

DWESMT - PAR 67/SV255 REQ'D DRWY. EASM'T. DE20150

PNT	OFFSET/	STATION/	ALIGNMENT
DE20448	35.15 L	13+35.20	Litany Court
DE20449	35.13 L	12+95.00	Litany Court
DE20450	55.00 L	13+00.00	Litany Court
DE20451	54.97 L	13+35.32	Litany Court
DE20448	35.15 L	13+35.20	Litany Court

68 LYMAN KENNETH WILLIAMS
SEE SHEET 31

REQD R/W - PAR 68/SV271 REQ'D R/W DE20151

PNT	OFFSET/ DIST	STATION/ BEARING	ALIGNMENT
4358	38.12 R	288+69.78	C/L Spout Springs Road
	210.14	N 10°00'57.3" W	
4382	54.38 R	290+80.11	C/L Spout Springs Road
	25.65	N 73°29'26.0" E	
DE20452	80.00 R	290+81.26	C/L Spout Springs Road
	210.46	S 10°21'47.4" E	
DE20436	65.00 R	288+70.06	C/L Spout Springs Road
	26.88	S 74°27'52.6" W	
4358	38.12 R	288+69.78	C/L Spout Springs Road
REQD R/W = 5494.74 SF			
REQD R/W = 0.126 ACRES			
REMAINDER = +/- 5.7 ACRES			

DWESMT - PAR 68/SV271 REQ'D DRWY. EASM'T. DE20152

PNT	OFFSET/	STATION/	ALIGNMENT
DE20436	65.00 R	288+70.06	C/L Spout Springs Road
DE20453	68.50 R	289+15.00	C/L Spout Springs Road
DE20454	105.00 R	289+15.00	C/L Spout Springs Road
DE20455	105.00 R	288+70.47	C/L Spout Springs Road
DE20436	65.00 R	288+70.06	C/L Spout Springs Road

69 TERI BLOMQUIST
SEE SHEET 31

REQD R/W - PAR 69/SV254 REQ'D R/W DE20153

PNT	OFFSET/ DIST	STATION/ BEARING	ALIGNMENT
4172	45.99 L	290+78.21	C/L Spout Springs Road
	62.34	S 30°50'21.3" W	
DE20445	90.00 L	290+34.30	C/L Spout Springs Road
ARC LENGTH = 37.92			
CHORD BEAR = N 14°04'48.8" W			
LNTH CHORD = 37.92			
RADIUS = 12090.00			
DEGREE = 0°28'26.1"			
DE20456	90.00 L	290+71.94	C/L Spout Springs Road
	44.46	N 67°52'11.7" E	
4172	45.99 L	290+78.21	C/L Spout Springs Road
REQD R/W = 835.05 SF			
REQD R/W = 0.019 ACRES			
REMAINDER = +/- 0.72 ACRES			

PESMT - PAR 69/SV254 EASM'T. FOR CONST. AND MAINT. OF SLOPES AND UTILITIES DE20154

PNT	OFFSET/ DIST	STATION/ BEARING	ALIGNMENT
4174	7671.24 L	18+17.59	Thompsons Mill Road
	71.94	S 76°28'46.1" W	
4176	7677.70 L	17+95.15	Thompsons Mill Road
	10.15	N 13°33'24.3" W	
DE20457	7687.80 L	17+95.44	Thompsons Mill Road
	72.06	N 76°19'16.9" E	
DE20446	7681.54 L	18+17.91	Thompsons Mill Road
	10.35	S 12°51'11.5" E	
4174	7671.24 L	18+17.59	Thompsons Mill Road
REQD EASMT = 737.68 SF			
REQD EASMT = 0.017 ACRES			

DWESMT - PAR 69/SV254 REQ'D DRWY. EASM'T. DE20155

PNT	OFFSET/	STATION/	ALIGNMENT
DE20458	35.11 L	12+80.00	Litany Court
DE20459	35.07 L	12+45.00	Litany Court
DE20460	55.00 L	12+45.00	Litany Court
DE20461	55.00 L	12+75.00	Litany Court
DE20458	35.11 L	12+80.00	Litany Court

70 HUGH T. ATKINSON
SEE SHEETS 31, 35

DWESMT - PAR 70/SV250 REQ'D DRWY. EASM'T. DE20157

PNT	OFFSET/	STATION/	ALIGNMENT
DE20473	94.70 L	291+80.00	C/L Spout Springs Road
DE20469	95.00 L	290+71.23	C/L Spout Springs Road
DE20474	155.00 L	290+62.76	C/L Spout Springs Road
DE20475	155.00 L	291+30.00	C/L Spout Springs Road
DE20473	94.70 L	291+80.00	C/L Spout Springs Road

70 TIMOTHY L. & MELINDA A. BARR
SEE SHEETS 31, 35

REQD R/W - PAR 70/SV250 REQ'D R/W DE20156

PNT	OFFSET/ DIST	STATION/ BEARING	ALIGNMENT
4193	9.10 L	297+08.10	C/L Spout Springs Road
	57.34	S 10°03'19.5" E	
4162	10.13 L	296+50.82	C/L Spout Springs Road
	290.55	S 10°00'57.3" E	
4161	19.78 L	293+60.79	C/L Spout Springs Road
	10.00	S 79°59'02.7" W	
4160	29.77 L	293+61.24	C/L Spout Springs Road
	284.38	S 10°00'57.3" E	
4172	45.99 L	290+78.21	C/L Spout Springs Road
	44.46	S 67°52'11.7" W	
DE20456	90.00 L	290+71.94	C/L Spout Springs Road
ARC LENGTH = 179.40			
CHORD BEAR = N 13°33'55.0" W			
LNTH CHORD = 179.40			
RADIUS = 12090.00			
DEGREE = 0°28'26.1"			
DE20462	90.00 L	292+50.00	C/L Spout Springs Road
	25.00	S 76°51'35.3" W	
DE20463	115.00 L	292+50.00	C/L Spout Springs Road
ARC LENGTH = 196.87			
CHORD BEAR = N 12°40'28.8" W			
LNTH CHORD = 196.87			
RADIUS = 12115.00			
DEGREE = 0°28'22.6"			
DE20464	115.00 L	294+45.00	C/L Spout Springs Road
	215.00	S 77°47'27.1" W	
DE20465	330.00 L	294+45.00	C/L Spout Springs Road
ARC LENGTH = 255.79			
CHORD BEAR = N 11°36'53.3" W			
LNTH CHORD = 255.79			
RADIUS = 12330.00			
DEGREE = 0°27'52.9"			
DE20468	330.00 L	296+93.95	C/L Spout Springs Road
	18.70	N 51°57'30.9" E	
1353	313.35 L	297+02.22	C/L Spout Springs Road
	30.45	N 80°14'18.7" E	
1350	282.91 L	297+01.59	C/L Spout Springs Road
	74.47	S 83°06'30.3" E	
1348	212.05 L	296+79.13	C/L Spout Springs Road
	49.59	N 70°40'58.5" E	
4189	162.98 L	296+86.13	C/L Spout Springs Road
	50.60	N 71°39'11.3" E	
4190	112.78 L	296+92.49	C/L Spout Springs Road
	23.15	N 52°13'15.8" E	
4191	92.12 L	297+02.83	C/L Spout Springs Road
	24.58	N 77°18'35.5" E	
4192	67.55 L	297+03.56	C/L Spout Springs Road
	58.63	N 74°34'31.3" E	
4193	9.10 L	297+08.10	C/L Spout Springs Road
REQD R/W = 106577.50 SF			
REQD R/W = 2.447 ACRES			
REMAINDER = +/- 32 ACRES			

TESMT - PAR 70/SV250 EASM'T. FOR CONST. OF FENCE DE20546

PNT	OFFSET/	STATION/	ALIGNMENT
DE20464	115.00 L	294+45.00	C/L Spout Springs Road
ARC LENGTH = 196.87			
CHORD BEAR = S 12°40'28.8" E			
LNTH CHORD = 196.87			
RADIUS = 12115.00			
DEGREE = 0°28'22.6"			
DE20463	115.00 L	292+50.00	C/L Spout Springs Road
DE20462	90.00 L	292+50.00	C/L Spout Springs Road
ARC LENGTH = 179.40			
CHORD BEAR = S 13°33'55.0" E			
LNTH CHORD = 179.40			
RADIUS = 12090.00			
DEGREE = 0°28'26.1"			
DE20456	90.00 L	290+71.94	C/L Spout Springs Road
DE20469	95.00 L	290+71.23	C/L Spout Springs Road
DE20470	95.00 L	292+45.00	C/L Spout Springs Road
DE20471	120.00 L	292+45.00	C/L Spout Springs Road
DE20472	120.00 L	294+45.00	C/L Spout Springs Road
DE20464	115.00 L	294+45.00	C/L Spout Springs Road
REQD EASMT AREA = 1915.98 SF			

STV 100 Years
3700 CRESTWOOD PARKWAY NW, SUITE 800
DULUTH, GEORGIA 30096
PHONE: (770)452-0797 FAX: (770)936-9171

DATE	REVISIONS	DATE	REVISIONS

HALL COUNTY
DEPARTMENT OF PUBLIC WORKS

RIGHT OF WAY DATA

PROJECT NO: 0015280
COUNTY: HALL
LAND LOT NO: N/A
LAND DISTRICT: N/A
GMD: 1419 / 392
DATE 9/28/22 SH 33 OF 46

71 RANDY DONALDSON AND TARI DONALDSON
SEE SHEETS 31, 35

REQD R/W - PAR 71/SV270 REQ'D R/W DE20158

PNT	OFFSET/ DIST	STATION/ BEARING	ALIGNMENT
4382	54.38 R	290+80.11	C/L Spout Springs Road
	275.59	N 10°00'57.3" W	
4100	70.12 R	293+56.69	C/L Spout Springs Road
	25.00	S 79°59'02.7" W	
4111	45.15 R	293+57.83	C/L Spout Springs Road
	290.57	N 10°00'57.3" W	
4117	54.85 R	296+49.46	C/L Spout Springs Road
	38.70	N 10°03'19.5" W	
4114	55.58 R	296+88.33	C/L Spout Springs Road
	15.00	N 79°56'40.5" E	
4115	70.58 R	296+88.07	C/L Spout Springs Road
	70.94	N 83°04'35.6" E	
4284	141.34 R	296+82.91	C/L Spout Springs Road
	239.62	S 71°23'08.6" E	
4283	348.90 R	295+60.67	C/L Spout Springs Road
	61.18	N 81°24'14.7" E	
DE20476	410.00 R	295+57.29	C/L Spout Springs Road

ARC LENGTH = 195.38
CHORD BEAR = S 12°09'21.3" E
LNTH CHORD = 195.38
RADIUS = 11590.00
DEGREE = 0°29'39.7"

DE20477	410.00 R	293+55.00	C/L Spout Springs Road
	309.71	S 67°13'22.1" W	
DE20478	105.00 R	293+00.00	C/L Spout Springs Road
	218.49	S 6°51'12.6" E	
DE20452	80.00 R	290+81.26	C/L Spout Springs Road
	25.65	S 73°29'26.0" W	
4382	54.38 R	290+80.11	C/L Spout Springs Road

REQD R/W = 113191.09 SF
REQD R/W = 2.599 ACRES
REMAINDER = +/- 9.3 ACRES

110 BRETT A. HURST AND MARY ANN HURST
SEE SHEET 31

PESWT - PAR 110/SV307 EASW'T. FOR CONST. AND MAINT. OF SLOPES AND UTILITIES DE20489

PNT	OFFSET/ DIST	STATION/ BEARING	ALIGNMENT
DE21465	25.08 R	11+92.84	Litany Court
	73.15	N 76°28'46.0" E	
4320	25.19 R	12+65.99	Litany Court
	12.78	S 13°35'20.7" E	
DE20431	37.97 R	12+65.99	Litany Court
	73.15	S 76°22'07.3" W	
DE21466	38.00 R	11+92.84	Litany Court
	12.92	N 13°36'14.4" W	
DE21465	25.08 R	11+92.84	Litany Court

REQD EASWT = 939.94 SF
REQD EASWT = 0.022 ACRES
REMAINDER = +/- 0.74 ACRES

DWESWT - PAR 110/SV307 REQ'D DRWY. EASW'T. DE20490

PNT	OFFSET/	STATION/	ALIGNMENT
DE21467	37.99 R	12+15.00	Litany Court
DE21468	37.97 R	12+60.00	Litany Court
DE21469	48.00 R	12+60.00	Litany Court
DE21470	48.00 R	12+15.00	Litany Court
DE21467	37.99 R	12+15.00	Litany Court

111 LINDA CASH
SEE SHEET 31

PESWT - PAR 111/SV253 EASW'T. FOR CONST. AND MAINT. OF SLOPES AND UTILITIES DE20491

PNT	OFFSET/ DIST	STATION/ BEARING	ALIGNMENT
4176	24.89 L	12+17.04	Litany Court
	5.00	S 76°28'46.0" W	
4901	24.89 L	12+12.04	Litany Court
	19.20	S 76°28'46.1" W	
DE21428	24.92 L	11+92.84	Litany Court
	10.08	N 13°36'14.4" W	
DE21429	35.00 L	11+92.84	Litany Court
	24.21	N 76°19'16.9" E	
DE20457	35.03 L	12+17.05	Litany Court
	10.15	S 13°33'24.3" E	
4176	24.89 L	12+17.04	Litany Court

REQD EASWT = 244.81 SF
REQD EASWT = 0.006 ACRES
REMAINDER = +/- 0.63 ACRES

STV 100 Years
3700 CRESTWOOD PARKWAY NW, SUITE 800
DULUTH, GEORGIA 30096
PHONE: (770)452-0797 FAX: (770)936-9171

DATE	REVISIONS	DATE	REVISIONS

HALL COUNTY
DEPARTMENT OF PUBLIC WORKS

RIGHT OF WAY DATA

PROJECT NO: 0015280
COUNTY: HALL
LAND LOT NO: N/A
LAND DISTRICT: N/A
GMD: 1419 / 392
DATE 9/28/22 SH 34 OF 46

REFERENCE POINT	NORTHING	EASTING
PT 297+88.41	1502174.2455	2383336.7040
STA. 300+00.00	1502382.2475	2383297.8921

WETLAND "29 B
ESA - WETLAND BUFFER END SPECIAL DITCH LT STA. 294+35.00
TIMOTHY L. & MELINDA A. BARR SEE SHEETS 31, 33
RICHARD LYNN HAMMER AND SANDRA D. HAMMER SEE SHEET 36
GAINESVILLE & HALL COUNTY DEVELOPMENT AUTHORITY SEE SHEETS 38, 39, 41
ESA - 25' STREAM BUFFER
TEMPORARY ESMT. FOR DEMO OF EXIST STRUCTURE
EPHEMERAL CHANNEL "29A
8' CHAIN LINK FENCE W/GATE
RIP RAP TYPE I 22 SY
EMBED. TRIPLE 10X15 RCBC
BMP 3-WEST POND
10' MULTI USE PATH
NON-BUFFERED STATE WATER SW-BH
5' CONC SIDEWALK
GUIDEWIRE
BEGIN SPECIAL DITCH LT STA. 307+89.85
P.C. 307+12.66
MATCH LINE STA. 294+00.00 SEE SHEET 31
MATCH LINE STA. 308+00.00 SEE SHEET 39
SPOUT SPRINGS RD
CURVE 4
CURVE 5
CONSTR. ℄
EXIST. R/W
REQ'D R/W
GND 1419
GND 392
N10°34'10"W
LOLLIS CREEK
PROPOSED REGRADED STREAM
PERENNIAL STREAM 29
ESA - 25' STREAM BUFFER
ORANGE BARRIER FENCE (TYP)
ESMT. FOR CONST. OF DRIVES (TYP.)
BEGIN SPECIAL DITCH RT STA. 298+85.00
END SPECIAL DITCH RT STA. 301+91.42
BEGIN SPECIAL DITCH RT STA. 306+00.00
END SPECIAL DITCH RT STA. 306+44.00
SEE SHEET 27 FOR ALIGNMENT CURVE DATA TABLES

70 TIMOTHY L. & MELINDA A. BARR SEE SHEETS 31, 33
71 RANDY DONALDSON AND TARI DONALDSON SEE SHEETS 31, 34
72 CLIFFORD HUTCHINS AND WYNETTE HUTCHINS SEE SHEET 36
73 RICHARD LYNN HAMMER AND SANDRA D. HAMMER SEE SHEET 36
74 TODD L. GREEN SEE SHEET 36
75 KENNETH A. SUTTER, SR AND KENNETH SUTTER, JR SEE SHEET 36
76 PERFECTO & JULIA D. LOPEZ SEE SHEET 36
77 FORTINO & HILDA LETICIA GONZALEZ SEE SHEET 37
78 NICHOLAS & RACHEL M. JENDRASIK SEE SHEET 37
79 MARTIN LABACA SEE SHEET 37
80 CHRISTOPHER G. YOUNGBLOOD AND ASHLEY N. YOUNGBLOOD SEE SHEET 37
81 GIUSEPPE SCOTTO DI CARLO SEE SHEET 37
82 MYLES C. HANSEL AND TRACIE L. HANSEL SEE SHEET 38
83 KEITH A. JOHNSON AND TRACY L. JOHNSON SEE SHEETS 38, 39
84 CHARLES R. & JESSICA M. WOOD SEE SHEET 38
DANNY L. BROWN

	BEGIN/END	STATION	OFFSET	GUARDRAIL TYPE	ANCHOR TYPE
34	BEGIN	294+78.39	68.56' LT	W	N/A
34A	BEGIN	294+93.70	51.75' LT	W	1 (R 15')
34B	END	298+41.04	57.72' LT	W	12
35	BEGIN	294+74.33	47.18' RT	W	12
35A	END	295+62.15	45.23' RT	W	1 (R 15')
35B	END	295+77.41	61.42' RT	W	N/A
36	BEGIN	296+63.73	45.00' RT	W	12
36A	END	298+14.20	45.00' RT	W	1

MEDIAN DESIGN CHANGE-OVER LOCATIONS				
	END	BEGIN	WIDTH	STATION
(A)	RAISED LANDSCAPED	RAISED CONCRETE	8'	295+68.92
(B)	RAISED CONCRETE	RAISED LANDSCAPED	8'	303+74.10

STV 100 Years
3700 CRESTWOOD PARKWAY NW, SUITE 800
DULUTH, GEORGIA 30096
PHONE: (770)452-0797 FAX: (770)936-9171

SCALE IN FEET
0 50 100 200

PROPERTY AND EXISTING R/W LINE
REQUIRED R/W LINE
CONSTRUCTION LIMITS
EASEMENT FOR CONSTR & MAINTENANCE OF SLOPES AND UTILITIES
EASEMENT FOR CONSTR OF SLOPES
EASEMENT FOR CONSTR OF DRIVES

BEGIN LIMIT OF ACCESS.....BLA
END LIMIT OF ACCESS.....ELA
LIMIT OF ACCESS
REQ'D R/W & LIMIT OF ACCESS
ORANGE BARRIER FENCE
ESA - ENV. SENSITIVE AREA (SEE ERIT TABLE)

DATE	REVISIONS		DATE	REVISIONS

HALL COUNTY DEPARTMENT OF PUBLIC WORKS

RIGHT OF WAY PLANS

PROJECT NO: 0015280
COUNTY: HALL
LAND LOT NO: N/A
LAND DISTRICT: N/A
GMD: 1419 / 392
DATE 9/28/22 SH 35 OF 46

72 CLIFFORD HUTCHINS AND WYNETTE HUTCHINS
SEE SHEET 35

REQD R/W - PAR 72/SV269 REQ'D R/W DE20159

PNT	OFFSET/ DIST	STATION/ BEARING	ALIGNMENT
4115	70.58 R	296+88.07	C/L Spout Springs Road
	392.31	N 10°03'19.5" W	
4276	74.52 R	300+80.95	C/L Spout Springs Road
	38.23	N 57°33'33.2" E	
DE20481	110.00 R	300+95.19	C/L Spout Springs Road
	295.19	S 10°34'10.1" E	
DE20483	110.00 R	298+00.00	C/L Spout Springs Road
	63.70	S 49°32'27.2" E	
DE20484	150.00 R	297+50.00	C/L Spout Springs Road

ARC LENGTH = 71.19
CHORD BEAR = S 10°55'29.9" E
LNTH CHORD = 71.19
RADIUS = 11850.00
DEGREE = 0°29'00.6"

DE20485	150.00 R	296+77.91	C/L Spout Springs Road
	9.97	N 71°23'08.6" W	
4284	141.34 R	296+82.91	C/L Spout Springs Road
	70.94	S 83°04'35.6" W	
4115	70.58 R	296+88.07	C/L Spout Springs Road

REQD R/W = 18559.51 SF
REQD R/W = 0.426 ACRES
REMAINDER = +/- 8.1 ACRES

DWESMT - PAR 72/SV269 REQ'D DRWY. EASM'T. DE20160

PNT	OFFSET/	STATION/	ALIGNMENT
DE20484	150.00 R	297+50.00	C/L Spout Springs Road
DE20483	110.00 R	298+00.00	C/L Spout Springs Road
DE20486	110.00 R	298+75.00	C/L Spout Springs Road
DE20487	250.00 R	298+75.00	C/L Spout Springs Road
DE20488	250.00 R	297+80.00	C/L Spout Springs Road
DE20484	150.00 R	297+50.00	C/L Spout Springs Road

73 RICHARD LYNN HAMMER AND SANDRA D. HAMMER
SEE SHEET 35

REQD R/W - PAR 73/SV272 REQ'D R/W DE20161

PNT	OFFSET/ DIST	STATION/ BEARING	ALIGNMENT
4202	6.85 L	299+28.52	C/L Spout Springs Road
	220.48	S 10°03'19.5" E	
4193	9.10 L	297+08.10	C/L Spout Springs Road
	58.63	S 74°34'31.3" W	
4192	67.55 L	297+03.56	C/L Spout Springs Road
	24.58	S 77°18'35.5" W	
4191	92.12 L	297+02.83	C/L Spout Springs Road
	23.15	S 52°13'15.8" W	
4190	112.78 L	296+92.49	C/L Spout Springs Road
	50.60	S 71°39'11.3" W	
4189	162.98 L	296+86.13	C/L Spout Springs Road
	7.10	S 70°40'58.8" W	
DE21401	170.00 L	296+85.12	C/L Spout Springs Road

ARC LENGTH = 104.75
CHORD BEAR = N 10°48'57.8" W
LNTH CHORD = 104.75
RADIUS = 12170.00
DEGREE = 0°28'14.9"

DE20489	170.00 L	297+88.41	C/L Spout Springs Road
	141.27	N 10°34'10.1" W	
DE20490	170.00 L	299+29.68	C/L Spout Springs Road
	163.15	N 79°50'19.3" E	
4202	6.85 L	299+28.52	C/L Spout Springs Road

REQD R/W = 37513.86 SF
REQD R/W = 0.861 ACRES
REMAINDER = +/- 1.4 ACRES

TESMT - PAR 73/SV272 EASM'T. FOR DEMO OF EXISTING STRUCTURE DE20573

PNT	OFFSET/	STATION/	ALIGNMENT
DE20491	170.00 L	299+05.00	C/L Spout Springs Road
DE20492	170.00 L	298+10.00	C/L Spout Springs Road
DE20493	245.00 L	298+10.00	C/L Spout Springs Road
DE20494	245.00 L	299+05.00	C/L Spout Springs Road
DE20491	170.00 L	299+05.00	C/L Spout Springs Road

REQD EASMT AREA = 7125.00 SF

74 TODD L. GREEN
SEE SHEET 35

REQD R/W - PAR 74/SV249 REQ'D R/W DE20162

PNT	OFFSET/ DIST	STATION/ BEARING	ALIGNMENT
4200	5.95 L	300+28.81	C/L Spout Springs Road
	100.29	S 10°03'19.5" E	
4202	6.85 L	299+28.52	C/L Spout Springs Road
	128.15	S 79°50'19.3" W	
DE20495	135.00 L	299+29.43	C/L Spout Springs Road
	100.38	N 7°42'51.4" W	
DE20496	130.00 L	300+29.69	C/L Spout Springs Road
	124.05	N 79°50'15.3" E	
4200	5.95 L	300+28.81	C/L Spout Springs Road

REQD R/W = 12646.28 SF
REQD R/W = 0.290 ACRES
REMAINDER = +/- 0.63 ACRES

DWESMT - PAR 74/SV249 REQ'D DRWY. EASM'T. DE20163

PNT	OFFSET/	STATION/	ALIGNMENT
DE20497	8973.64 L	18+67.93	Thompsons Mill Road
DE20495	8894.19 L	18+64.00	Thompsons Mill Road
DE20490	8898.85 L	18+54.20	Thompsons Mill Road
DE20500	8950.74 L	18+56.08	Thompsons Mill Road
DE20497	8973.64 L	18+67.93	Thompsons Mill Road

75 KENNETH A. SUTTER, SR AND KENNETH SUTTER, JR
SEE SHEET 35

REQD R/W - PAR 75/SV248 REQ'D R/W DE20164

PNT	OFFSET/ DIST	STATION/ BEARING	ALIGNMENT
4198	5.05 L	301+28.80	C/L Spout Springs Road
	100.00	S 10°03'19.5" E	
4200	5.95 L	300+28.81	C/L Spout Springs Road
	124.05	S 79°50'15.3" W	
DE20496	130.00 L	300+29.69	C/L Spout Springs Road
	101.84	N 0°45'20.5" E	
DE20501	110.00 L	301+29.55	C/L Spout Springs Road
	104.95	N 79°50'26.3" E	
4198	5.05 L	301+28.80	C/L Spout Springs Road

REQD R/W = 11449.82 SF
REQD R/W = 0.263 ACRES
REMAINDER = +/- 0.65 ACRES

DWESMT - PAR 75/SV248 REQ'D DRWY. EASM'T. DE20165

PNT	OFFSET/	STATION/	ALIGNMENT
DE20501	110.00 L	301+29.55	C/L Spout Springs Road
DE20502	122.33 L	300+67.99	C/L Spout Springs Road
DE20503	150.00 L	300+95.00	C/L Spout Springs Road
DE20506	150.00 L	301+29.83	C/L Spout Springs Road
DE20501	110.00 L	301+29.55	C/L Spout Springs Road

76 PERFECTO & JULIA D. LOPEZ
SEE SHEET 35

REQD R/W - PAR 76/SV267 REQ'D R/W DE20166

PNT	OFFSET/ DIST	STATION/ BEARING	ALIGNMENT
4276	74.52 R	300+80.95	C/L Spout Springs Road
	291.24	N 10°03'19.5" W	
4274	77.13 R	303+72.18	C/L Spout Springs Road
	13.06	N 69°33'58.9" E	
DE20507	90.00 R	303+74.41	C/L Spout Springs Road
	174.41	S 10°34'10.1" E	
DE20508	90.00 R	302+00.00	C/L Spout Springs Road
	106.70	S 21°22'23.6" E	
DE20481	110.00 R	300+95.19	C/L Spout Springs Road
	38.23	S 57°33'33.2" W	
4276	74.52 R	300+80.95	C/L Spout Springs Road

REQD R/W = 5222.60 SF
REQD R/W = 0.120 ACRES
REMAINDER = +/- 1.8 ACRES

DWESMT - PAR 76/SV267 REQ'D DRWY. EASM'T. DE20167

PNT	OFFSET/	STATION/	ALIGNMENT
DE20509	90.00 R	302+65.00	C/L Spout Springs Road
DE20510	90.00 R	303+15.00	C/L Spout Springs Road
DE20511	135.00 R	303+15.00	C/L Spout Springs Road
DE20512	135.00 R	302+65.00	C/L Spout Springs Road
DE20509	90.00 R	302+65.00	C/L Spout Springs Road

STV 100 Years
3700 CRESTWOOD PARKWAY NW, SUITE 800
DULUTH, GEORGIA 30096
PHONE: (770)452-0797 FAX: (770)936-9171

DATE	REVISIONS	DATE	REVISIONS

HALL COUNTY
DEPARTMENT OF PUBLIC WORKS

RIGHT OF WAY DATA

PROJECT NO: 0015280
COUNTY: HALL
LAND LOT NO: N/A
LAND DISTRICT: N/A
GMD: 1419 / 392
DATE 9/28/22 SH 36 OF 46

(77) FORTINO & HILDA LETICIA GONZALEZ
SEE SHEET 35

REQD R/W - PAR 77/SV247 REQ'D R/W DE20168

PNT	OFFSET/ DIST	STATION/ BEARING	ALIGNMENT
4196	4.16 L	302+28.71	C/L Spout Springs Road
	99.92	S 10°03'19.5" E	
4198	5.05 L	301+28.80	C/L Spout Springs Road
	104.95	S 79°50'26.3" W	
DE20501	110.00 L	301+29.55	C/L Spout Springs Road
	99.93	N 10°34'10.1" W	
DE20513	110.00 L	302+29.48	C/L Spout Springs Road
	105.84	N 79°50'46.3" E	
4196	4.16 L	302+28.71	C/L Spout Springs Road

REQD R/W = 10531.58 SF
REQD R/W = 0.242 ACRES
REMAINDER = +/- 0.67 ACRES

PESWT - PAR 77/SV247 EASM'T. FOR CONST. AND MAINT. OF SLOPES AND UTILITIES DE20169

PNT	OFFSET/ DIST	STATION/ BEARING	ALIGNMENT
DE20514	110.00 L	301+40.00	C/L Spout Springs Road
	10.45	S 10°34'10.1" E	
DE20501	110.00 L	301+29.55	C/L Spout Springs Road
	40.00	S 79°50'26.3" W	
DE20506	150.00 L	301+29.83	C/L Spout Springs Road
	41.27	N 65°10'08.8" E	
DE20514	110.00 L	301+40.00	C/L Spout Springs Road

REQD EASWT = 209.07 SF
REQD EASWT = 0.005 ACRES

DWESWT - PAR 77/SV247 REQ'D DRWY. EASM'T. DE20170

PNT	OFFSET/	STATION/	ALIGNMENT
DE20515	110.00 L	302+15.00	C/L Spout Springs Road
DE20516	110.00 L	301+50.00	C/L Spout Springs Road
DE20517	140.00 L	301+75.00	C/L Spout Springs Road
DE20518	140.00 L	302+10.00	C/L Spout Springs Road
DE20515	110.00 L	302+15.00	C/L Spout Springs Road

(78) NICHOLAS & RACHEL M. JENDRASIK
SEE SHEET 35

REQD R/W - PAR 78/SV246 REQ'D R/W DE20171

PNT	OFFSET/ DIST	STATION/ BEARING	ALIGNMENT
4194	3.26 L	303+28.74	C/L Spout Springs Road
	100.03	S 10°03'19.5" E	
4196	4.16 L	302+28.71	C/L Spout Springs Road
	105.84	S 79°50'46.3" W	
DE20513	110.00 L	302+29.48	C/L Spout Springs Road
	100.03	N 10°34'10.1" W	
DE20519	110.00 L	303+29.51	C/L Spout Springs Road
	106.74	N 79°50'43.3" E	
4194	3.26 L	303+28.74	C/L Spout Springs Road

REQD R/W = 10632.40 SF
REQD R/W = 0.244 ACRES
REMAINDER = +/- 0.67 ACRES

DWESWT - PAR 78/SV246 REQ'D DRWY. EASM'T. DE20172

PNT	OFFSET/	STATION/	ALIGNMENT
DE20520	110.00 L	302+90.00	C/L Spout Springs Road
DE20513	110.00 L	302+29.48	C/L Spout Springs Road
DE21408	135.00 L	302+50.00	C/L Spout Springs Road
DE20522	135.00 L	302+90.00	C/L Spout Springs Road
DE20520	110.00 L	302+90.00	C/L Spout Springs Road

(79) MARTIN LABACA
SEE SHEET 35

REQD R/W - PAR 79/SV245 REQ'D R/W DE20173

PNT	OFFSET/ DIST	STATION/ BEARING	ALIGNMENT
4204	2.36 L	304+28.74	C/L Spout Springs Road
	100.00	S 10°03'19.5" E	
4194	3.26 L	303+28.74	C/L Spout Springs Road
	86.74	S 79°50'43.3" W	
DE20523	90.00 L	303+29.37	C/L Spout Springs Road
	101.84	N 0°45'21.5" E	
DE20524	70.00 L	304+29.23	C/L Spout Springs Road
	67.64	N 79°50'42.3" E	
4204	2.36 L	304+28.74	C/L Spout Springs Road

REQD R/W = 7719.10 SF
REQD R/W = 0.177 ACRES
REMAINDER = +/- 0.74 ACRES

DWESWT - PAR 79/SV245 REQ'D DRWY. EASM'T. DE20174

PNT	OFFSET/	STATION/	ALIGNMENT
DE20524	70.00 L	304+29.23	C/L Spout Springs Road
DE20525	78.86 L	303+85.00	C/L Spout Springs Road
DE20526	95.00 L	303+85.00	C/L Spout Springs Road
DE20528	95.00 L	304+29.41	C/L Spout Springs Road
DE20524	70.00 L	304+29.23	C/L Spout Springs Road

(80) CHRISTOPHER G. YOUNGBLOOD AND ASHLEY N. YOUNGBLOOD
SEE SHEET 35

REQD R/W - PAR 80/SV266 REQ'D R/W DE20175

PNT	OFFSET/ DIST	STATION/ BEARING	ALIGNMENT
4274	77.13 R	303+72.18	C/L Spout Springs Road
	173.15	N 10°03'19.5" W	
4272	78.69 R	305+45.32	C/L Spout Springs Road
	16.34	N 76°30'20.9" E	
DE20529	95.00 R	305+46.15	C/L Spout Springs Road
	170.87	S 10°34'10.1" E	
DE20531	95.00 R	303+75.28	C/L Spout Springs Road
	18.14	S 69°33'58.9" W	
4274	77.13 R	303+72.18	C/L Spout Springs Road

REQD R/W = 2938.30 SF
REQD R/W = 0.067 ACRES
REMAINDER = +/- 0.99 ACRES

DWESWT - PAR 80/SV266 REQ'D DRWY. EASM'T. DE20176

PNT	OFFSET/	STATION/	ALIGNMENT
DE20532	95.00 R	304+30.00	C/L Spout Springs Road
DE20529	95.00 R	305+46.15	C/L Spout Springs Road
DE20535	150.00 R	305+48.96	C/L Spout Springs Road
DE20536	150.00 R	304+95.00	C/L Spout Springs Road
DE20532	95.00 R	304+30.00	C/L Spout Springs Road

(81) GIUSEPPE SCOTTO DI CARLO
SEE SHEET 35

REQD R/W - PAR 81/SV244 REQ'D R/W DE20177

PNT	OFFSET/ DIST	STATION/ BEARING	ALIGNMENT
4213	1.69 L	305+03.85	C/L Spout Springs Road
	75.12	S 10°03'19.5" E	
4204	2.36 L	304+28.74	C/L Spout Springs Road
	67.64	S 79°50'42.3" W	
DE20524	70.00 L	304+29.23	C/L Spout Springs Road
	75.12	N 10°34'10.1" W	
DE21411	70.00 L	305+04.34	C/L Spout Springs Road
	68.31	N 79°50'42.3" E	
4213	1.69 L	305+03.85	C/L Spout Springs Road

REQD R/W = 5106.00 SF
REQD R/W = 0.117 ACRES
REMAINDER = +/- 10.6 ACRES

DWESWT - PAR 81/SV244 REQ'D DRWY. EASM'T. DE20178

PNT	OFFSET/	STATION/	ALIGNMENT
DE20537	70.00 L	305+04.34	C/L Spout Springs Road
DE20539	70.00 L	304+50.00	C/L Spout Springs Road
DE20540	160.00 L	304+50.00	C/L Spout Springs Road
DE20541	160.00 L	304+85.00	C/L Spout Springs Road
DE20537	70.00 L	305+04.34	C/L Spout Springs Road

STV 100 Years
3700 CRESTWOOD PARKWAY NW, SUITE 800
DULUTH, GEORGIA 30096
PHONE: (770)452-0797 FAX: (770)936-9171

DATE	REVISIONS	DATE	REVISIONS

HALL COUNTY
DEPARTMENT OF PUBLIC WORKS

RIGHT OF WAY DATA

PROJECT NO: 0015280
COUNTY: HALL
LAND LOT NO: N/A
LAND DISTRICT: N/A
GMD: 1419 / 392
DATE 9/28/22 SH 37 OF 46

82 MYLES C. HANSEL AND TRACIE L. HANSEL
SEE SHEET 35

REQD R/W - PAR 82/SV243 REQ'D R/W DE20179

PNT	OFFSET/ DIST	STATION/ BEARING	ALIGNMENT
4209	0.79 L	306+03.93	C/L Spout Springs Road
	100.09	S 10°03'19.5" E	
4213	1.69 L	305+03.85	C/L Spout Springs Road
	68.31	S 79°50'42.3" W	
DE21411	70.00 L	305+04.34	C/L Spout Springs Road
	100.09	N 10°34'10.1" W	
DE20542	70.00 L	306+04.43	C/L Spout Springs Road
	69.21	N 79°50'42.3" E	
4209	0.79 L	306+03.93	C/L Spout Springs Road

REQD R/W = 6881.97 SF
REQD R/W = 0.158 ACRES
REMAINDER = +/- 0.84 ACRES

DWESWT - PAR 82/SV243 REQ'D DRWY. EASM'T. DE20180

PNT	OFFSET/	STATION/	ALIGNMENT
DE20551	70.00 L	305+70.00	C/L Spout Springs Road
DE20552	70.00 L	305+30.00	C/L Spout Springs Road
DE20553	95.00 L	305+30.00	C/L Spout Springs Road
DE20554	95.00 L	305+70.00	C/L Spout Springs Road
DE20551	70.00 L	305+70.00	C/L Spout Springs Road

83 KEITH A. JOHNSON AND TRACY L. JOHNSON
SEE SHEETS 35, 39

REQD R/W - PAR 83/SV264 REQ'D R/W DE20181

PNT	OFFSET/ DIST	STATION/ BEARING	ALIGNMENT
4272	78.69 R	305+45.32	C/L Spout Springs Road
	287.03	N 10°03'19.5" W	
4127	19.47 R	10+83.06	Deaton Henry Road
	97.95	S 85°25'48.9" E	
DE20543	24.82 R	11+85.00	Deaton Henry Road
	86.71	S 71°50'08.7" W	
DE20545	90.00 R	307+95.00	C/L Spout Springs Road

ARC LENGTH = 82.63
CHORD BEAR = S 10°39'49.8" E
LNTH CHORD = 82.63
RADIUS = 25090.00
DEGREE = 0°13'42.1"

DE21412	90.00 R	307+12.67	C/L Spout Springs Road
	166.76	S 10°34'10.1" E	
DE20547	90.00 R	305+45.90	C/L Spout Springs Road
	11.33	S 76°30'20.9" W	
4272	78.69 R	305+45.32	C/L Spout Springs Road

REQD R/W = 4347.48 SF
REQD R/W = 0.100 ACRES
REMAINDER = +/- 1.1 ACRES

DWESWT - PAR 83/SV264 REQ'D DRWY. EASM'T. DE20182

PNT	OFFSET/	STATION/	ALIGNMENT
DE20548	49.29 R	11+22.00	Deaton Henry Road
DE20543	24.82 R	11+85.00	Deaton Henry Road
DE20549	45.00 R	11+84.00	Deaton Henry Road
DE20550	65.00 R	11+40.00	Deaton Henry Road
DE20548	49.29 R	11+22.00	Deaton Henry Road

84 CHARLES R. & JESSICA M. WOOD
SEE SHEET 35

REQD R/W - PAR 84/SV242 REQ'D R/W DE20183

PNT	OFFSET/ DIST	STATION/ BEARING	ALIGNMENT
4208	0.11 R	307+03.92	C/L Spout Springs Road
	100.00	S 10°03'19.5" E	
4209	0.79 L	306+03.93	C/L Spout Springs Road
	84.21	S 79°50'42.3" W	
DE20555	85.00 L	306+04.54	C/L Spout Springs Road
	100.00	N 10°34'10.1" W	
DE20556	85.00 L	307+04.54	C/L Spout Springs Road
	85.11	N 79°50'42.3" E	
4208	0.11 R	307+03.92	C/L Spout Springs Road

REQD R/W = 8465.89 SF
REQD R/W = 0.194 ACRES
REMAINDER = +/- 4.8 ACRES

DWESWT - PAR 84/SV242 REQ'D DRWY. EASM'T. DE20184

PNT	OFFSET/	STATION/	ALIGNMENT
DE20556	85.00 L	307+04.54	C/L Spout Springs Road
DE20557	85.00 L	306+40.00	C/L Spout Springs Road
DE20558	115.00 L	306+40.00	C/L Spout Springs Road
DE20561	115.00 L	307+04.76	C/L Spout Springs Road
DE20556	85.00 L	307+04.54	C/L Spout Springs Road

85 GAINESVILLE & HALL COUNTY DEVELOPMENT AUTHORITY
SEE SHEETS 35, 39, 41

REQD R/W - PAR 85/SV239-TRACT 1 REQ'D R/W DE20185

PNT	OFFSET/ DIST	STATION/ BEARING	ALIGNMENT
4459	50.21 R	321+84.63	C/L Spout Springs Road
	144.97	S 9°56'50.9" E	
4163	43.49 R	320+39.82	C/L Spout Springs Road
	1337.03	S 10°03'19.5" E	
4208	0.11 R	307+03.93	C/L Spout Springs Road
	115.11	S 79°50'42.3" W	
DE20561	115.00 L	307+04.76	C/L Spout Springs Road
	7.90	N 10°33'37.3" W	
DE20562	115.00 L	307+12.66	C/L Spout Springs Road

ARC LENGTH = 883.78
CHORD BEAR = N 11°35'12.8" W
LNTH CHORD = 883.73
RADIUS = 24885.00
DEGREE = 0°13'48.9"

DE20563	115.00 L	316+00.52	C/L Spout Springs Road
	199.48	N 12°36'15.4" W	
DE20564	115.00 L	318+00.00	C/L Spout Springs Road
	25.00	S 77°23'44.6" W	
DE20565	140.00 L	318+00.00	C/L Spout Springs Road
	536.55	N 12°36'15.4" W	
DE20566	140.00 L	323+36.55	C/L Spout Springs Road
	243.43	S 63°59'26.8" E	
4459	50.21 R	321+84.63	C/L Spout Springs Road

REQD R/W = 224029.92 SF
REQD R/W = 5.143 ACRES
REMAINDER = +/- 300 ACRES

REQD R/W - PAR 85/SV239-TRACT 2 REQ'D R/W DE20186

PNT	OFFSET/ DIST	STATION/ BEARING	ALIGNMENT
4016	4.45 L	332+89.70	C/L Spout Springs Road
	156.49	S 24°31'33.9" E	
4165	27.88 R	331+36.59	C/L Spout Springs Road

ARC LENGTH = 45.16
CHORD BEAR = S 23°53'52.8" E
LNTH CHORD = 45.16
RADIUS = 2060.00
DEGREE = 2°46'52.9"

4472	36.72 R	330+92.30	C/L Spout Springs Road
	446.13	S 10°35'04.6" E	
4473	21.00 R	326+46.45	C/L Spout Springs Road
	135.94	S 45°58'12.1" W	
DE21413	95.00 L	325+75.57	C/L Spout Springs Road
	424.43	N 12°36'15.4" W	
DE20573	95.00 L	330+00.00	C/L Spout Springs Road
	201.00	N 6°53'37.3" W	
DE20574	75.00 L	332+00.00	C/L Spout Springs Road
	67.21	N 12°36'15.4" W	
DE20575	75.00 L	332+67.21	C/L Spout Springs Road
	74.05	N 59°42'51.7" E	
4016	4.45 L	332+89.70	C/L Spout Springs Road

REQD R/W = 76729.28 SF
REQD R/W = 1.761 ACRES

85 GAINESVILLE & HALL COUNTY DEVELOPMENT AUTHORITY
SEE SHEETS 35, 39, 41

PESWT - PAR 85/SV239 EASM'T. FOR CONST. AND MAINT. OF SLOPES AND UTILITIES DE20187

PNT	OFFSET/ DIST	STATION/ BEARING	ALIGNMENT
DE20575	75.00 L	332+67.21	C/L Spout Springs Road
	67.21	S 12°36'15.4" E	
DE20574	75.00 L	332+00.00	C/L Spout Springs Road
	201.00	S 6°53'37.3" E	
DE20573	95.00 L	330+00.00	C/L Spout Springs Road
	118.85	N 87°59'02.8" W	
DE20578	210.00 L	330+30.00	C/L Spout Springs Road
	190.07	N 67°14'30.6" W	
DE20579	365.00 L	331+40.00	C/L Spout Springs Road
	105.30	N 5°39'31.0" E	
DE20580	332.00 L	332+40.00	C/L Spout Springs Road
	112.65	N 87°16'49.2" E	
4225	221.02 L	332+20.66	C/L Spout Springs Road
	153.27	N 59°42'51.7" E	
DE20575	75.00 L	332+67.21	C/L Spout Springs Road

REQD EASMT = 50551.86 SF
REQD EASMT = 1.161 ACRES

TESWT - PAR 85/SV239 - TRACT 1 EASM'T. FOR CONST. OF FENCE DE20548

PNT	OFFSET/	STATION/	ALIGNMENT
DE20566	140.00 L	323+36.55	C/L Spout Springs Road
DE20565	140.00 L	318+00.00	C/L Spout Springs Road
DE20564	115.00 L	318+00.00	C/L Spout Springs Road
DE20563	115.00 L	316+00.52	C/L Spout Springs Road

ARC LENGTH = 358.86
CHORD BEAR = S 12°11'28.2" E
LNTH CHORD = 358.86
RADIUS = 24885.00
DEGREE = 0°13'48.9"

DE20567	115.00 L	312+40.00	C/L Spout Springs Road
DE20568	120.00 L	312+40.00	C/L Spout Springs Road
DE20569	120.00 L	317+95.00	C/L Spout Springs Road
DE20570	145.00 L	317+95.00	C/L Spout Springs Road
DE20571	145.00 L	323+40.54	C/L Spout Springs Road
DE20566	140.00 L	323+36.55	C/L Spout Springs Road

REQD EASMT AREA = 6015.55 SF

TESWT - PAR 85/SV239 - TRACT 2 EASM'T. FOR CONST. OF FENCE DE20549

PNT	OFFSET/	STATION/	ALIGNMENT
DE20573	95.00 L	330+00.00	C/L Spout Springs Road
DE21413	95.00 L	325+75.57	C/L Spout Springs Road
DE20576	100.00 L	325+72.51	C/L Spout Springs Road
DE20577	100.00 L	330+00.00	C/L Spout Springs Road
DE20573	95.00 L	330+00.00	C/L Spout Springs Road

REQD EASMT AREA = 2129.81 SF

STV 100 Years
3700 CRESTWOOD PARKWAY NW, SUITE 800
DULUTH, GEORGIA 30096
PHONE: (770)452-0797 FAX: (770)936-9171

DATE	REVISIONS	DATE	REVISIONS

HALL COUNTY
DEPARTMENT OF PUBLIC WORKS

RIGHT OF WAY DATA

PROJECT NO: 0015280
COUNTY: HALL
LAND LOT NO: N/A
LAND DISTRICT: N/A
GMD: 1419 / 392
DATE 9/28/22 SH 38 OF 46

SPOUT SPRINGS RD
Curve# 5
PI Sta: 311+56.64
N: 1503519.2600
E: 2383085.7330
DELTA: 02°02'05.3" (LT)
D: 00°13'45.06"
T: 443.97
L: 887.86
R: 25000.00
E: 3.94
e: N/A

DEATON HENRY RD
Curve# 1
PI Sta: 11+00.04
N: 1503238.7970
E: 2383239.4310
DELTA: 15°14'47.7" (RT)
D: 19°05'54.94"
T: 40.15
L: 79.83
R: 300.00
E: 2.68
e: N/A

REFERENCE POINT	NORTHING	EASTING
PT 316+00.52	1503952.5347	2382988.8506

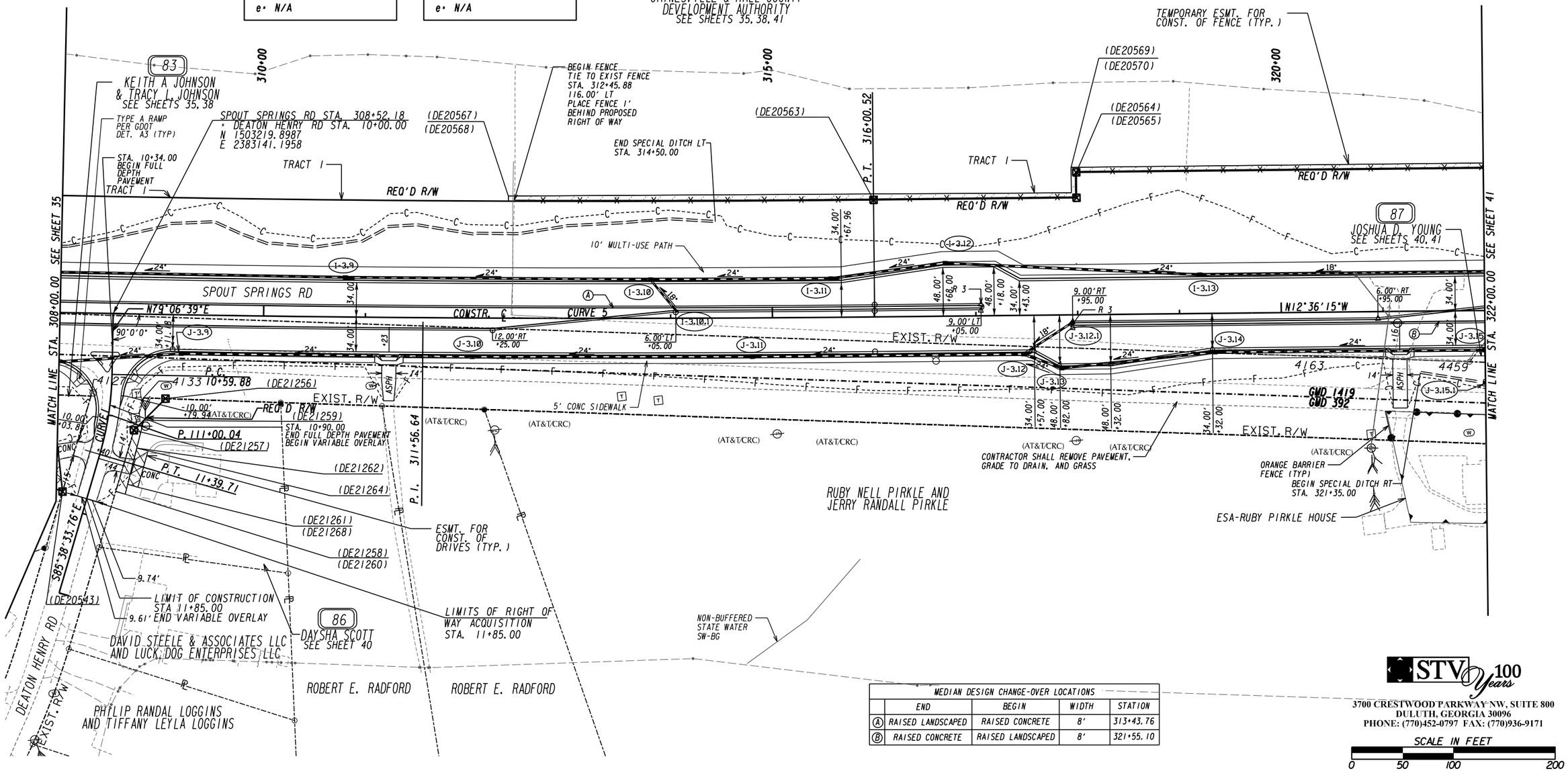

MEDIAN DESIGN CHANGE-OVER LOCATIONS				
	END	BEGIN	WIDTH	STATION
(A)	RAISED LANDSCAPED	RAISED CONCRETE	8'	313+43.76
(B)	RAISED CONCRETE	RAISED LANDSCAPED	8'	321+55.10

STV 100 Years
3700 CRESTWOOD PARKWAY NW, SUITE 800
DULUTH, GEORGIA 30096
PHONE: (770)452-0797 FAX: (770)936-9171

SCALE IN FEET
0 50 100 200

PROPERTY AND EXISTING R/W LINE
REQUIRED R/W LINE
CONSTRUCTION LIMITS
EASEMENT FOR CONSTR & MAINTENANCE OF SLOPES AND UTILITIES
EASEMENT FOR CONSTR OF SLOPES
EASEMENT FOR CONSTR OF DRIVES

BEGIN LIMIT OF ACCESS.....BLA
END LIMIT OF ACCESS.....ELA
LIMIT OF ACCESS
REQ'D R/W & LIMIT OF ACCESS
ORANGE BARRIER FENCE
ESA - ENV. SENSITIVE AREA (SEE ERIT TABLE)

DATE	REVISIONS		DATE	REVISIONS

HALL COUNTY
DEPARTMENT OF PUBLIC WORKS

RIGHT OF WAY PLANS

PROJECT NO: 0015280
COUNTY: HALL
LAND LOT NO: N/A
LAND DISTRICT: N/A
GMD: 1419 / 392
DATE 9/28/22 SH 39 OF 46

86 DAYSHA SCOTT
SEE SHEET 39

REQD R/W - PAR 86/SV260 REQ'D R/W DE20188

PNT	OFFSET/ DIST	STATION/ BEARING	ALIGNMENT
4133	32.12 L	10+80.14	Deaton Henry Road
	21.63	N 10°03'19.5" W	
DE21256	82.66 R	309+05.00	C/L Spout Springs Road
	43.94	S 56°59'32.7" E	
DE21257	27.08 L	11+10.00	Deaton Henry Road
	33.18	N 85°25'48.9" W	
4133	32.12 L	10+80.14	Deaton Henry Road

REQD R/W = 347.16 SF
REQD R/W = 0.008 ACRES
REMAINDER = +/- 0.58 ACRES

PESWT - PAR 86/SV260 EASM'T. FOR CONST. AND MAINT. OF SLOPES AND UTILITIES DE20189

PNT	OFFSET/ DIST	STATION/ BEARING	ALIGNMENT
DE21258	25.24 L	11+70.00	Deaton Henry Road
	62.63	N 85°25'48.9" W	
DE21257	27.08 L	11+10.00	Deaton Henry Road
	13.71	N 56°59'32.7" W	
DE21259	35.00 L	10+99.86	Deaton Henry Road
	74.72	S 87°54'25.9" E	
DE21260	35.00 L	11+70.00	Deaton Henry Road
	9.76	S 4°21'26.2" W	
DE21258	25.24 L	11+70.00	Deaton Henry Road

REQD EASWT = 568.84 SF
REQD EASWT = 0.013 ACRES

DWESWT - PAR 86/SV260 REQ'D DRWY. EASM'T. DE20190

PNT	OFFSET/	STATION/	ALIGNMENT
DE21261	34.60 L	11+60.00	Deaton Henry Road
DE21262	33.55 L	11+25.00	Deaton Henry Road
DE21264	45.00 L	11+25.00	Deaton Henry Road
DE21268	45.00 L	11+60.00	Deaton Henry Road
DE21261	34.60 L	11+60.00	Deaton Henry Road

87 JOSHUA D. YOUNG
SEE SHEETS 39, 41

REQD R/W - PAR 87/SV241 REQ'D R/W DE20191

PNT	OFFSET/ DIST	STATION/ BEARING	ALIGNMENT
529	72.04 R	326+77.63	C/L Spout Springs Road

ARC LENGTH = 61.73
CHORD BEAR = S 10°49'00.0" E
LNTH CHORD = 61.72
RADIUS = 2060.00
DEGREE = 2°46'52.9"

4164	70.12 R	326+15.94	C/L Spout Springs Road
	431.77	S 9°57'42.8" E	
4459	50.21 R	321+84.63	C/L Spout Springs Road
	198.64	N 63°59'26.8" W	
DE20582	105.00 L	323+08.59	C/L Spout Springs Road
	260.86	N 12°36'15.4" W	
DE20583	105.00 L	325+69.46	C/L Spout Springs Road
	147.66	N 45°58'11.9" E	
4473	21.00 R	326+46.45	C/L Spout Springs Road
	59.81	N 45°58'12.1" E	
529	72.04 R	326+77.63	C/L Spout Springs Road

REQD R/W = 62912.45 SF
REQD R/W = 1.444 ACRES
REMAINDER = +/- 0.55 ACRES

STV 100 years
3700 CRESTWOOD PARKWAY NW, SUITE 800
DULUTH, GEORGIA 30096
PHONE: (770)452-0797 FAX: (770)936-9171

DATE	REVISIONS	DATE	REVISIONS

HALL COUNTY
DEPARTMENT OF PUBLIC WORKS

RIGHT OF WAY DATA

PROJECT NO: 0015280
COUNTY: HALL
LAND LOT NO: N/A
LAND DISTRICT: N/A
GMD: 1419 / 392
DATE 9/28/22 SH 40 OF 46

REFERENCE POINT	NORTHING	EASTING
STA. 325+00.00	1504830.3397	2382792.5689
STA. 330+00.00	1505318.2900	2382683.4608

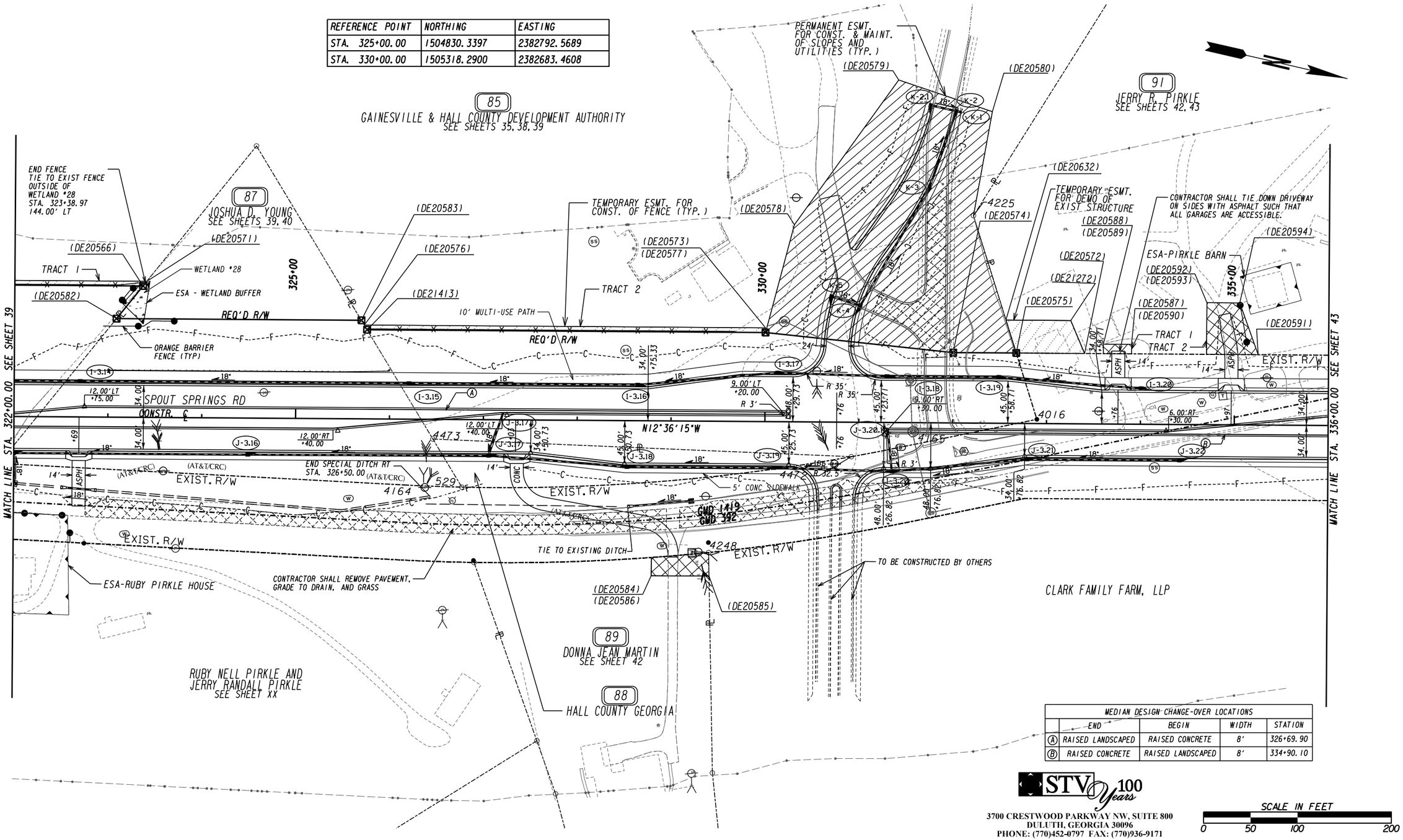

MEDIAN DESIGN CHANGE-OVER LOCATIONS				
	END	BEGIN	WIDTH	STATION
(A)	RAISED LANDSCAPED	RAISED CONCRETE	8'	326+69.90
(B)	RAISED CONCRETE	RAISED LANDSCAPED	8'	334+90.10

STV 100 Years
3700 CRESTWOOD PARKWAY NW, SUITE 800
DULUTH, GEORGIA 30096
PHONE: (770)452-0797 FAX: (770)936-9171

SCALE IN FEET
0 50 100 200

PROPERTY AND EXISTING R/W LINE
REQUIRED R/W LINE
CONSTRUCTION LIMITS
EASEMENT FOR CONSTR & MAINTENANCE OF SLOPES AND UTILITIES
EASEMENT FOR CONSTR OF SLOPES
EASEMENT FOR CONSTR OF DRIVES

BEGIN LIMIT OF ACCESS.....BLA
END LIMIT OF ACCESS.....ELA
LIMIT OF ACCESS
REQ'D R/W & LIMIT OF ACCESS
ORANGE BARRIER FENCE
ESA - ENV. SENSITIVE AREA
(SEE ERIT TABLE)

DATE	REVISIONS	DATE	REVISIONS

HALL COUNTY
DEPARTMENT OF PUBLIC WORKS

RIGHT OF WAY PLANS

PROJECT NO: 0015280
COUNTY: HALL
LAND LOT NO: N/A
LAND DISTRICT: N/A
GMD: 1419 / 392
DATE 9/28/22 SH 41 OF 46

88 HALL COUNTY GEORGIA
SEE SHEET 41

REQD R/W - PAR 88/SV240 REQ'D R/W DE20192

PNT	OFFSET/ DIST	STATION/ BEARING	ALIGNMENT
4473	21.00 R	326+46.45	C/L Spout Springs Road
	446.13	N 10°35'04.6" W	
4472	36.72 R	330+92.30	C/L Spout Springs Road

ARC LENGTH = 416.88
CHORD BEAR = S 17°28'21.0" E
LNTH CHORD = 416.17
RADIUS = 2060.00
DEGREE = 2°46'52.9"

529	72.04 R	326+77.63	C/L Spout Springs Road
	59.81	S 45°58'12.1" W	
4473	21.00 R	326+46.45	C/L Spout Springs Road

REQD R/W = 14057.79 SF
REQD R/W = 0.323 ACRES
REMAINDER = +/- 0.0 ACRES

89 DONNA JEAN MARTIN
SEE SHEET 41

DWESWT - PAR 89/SV256 REQ'D DRWY. EASW'T. DE20193

PNT	OFFSET/	STATION/	ALIGNMENT
DE20584	145.63 R	328+80.00	C/L Spout Springs Road

ARC LENGTH = 61.20
CHORD BEAR = N 17°57'07.2" W
LNTH CHORD = 61.20
RADIUS = 2140.00
DEGREE = 2°40'38.5"

4248	139.93 R	329+40.93	C/L Spout Springs Road
DE20585	165.00 R	329+41.54	C/L Spout Springs Road
DE20586	165.00 R	328+80.00	C/L Spout Springs Road
DE20584	145.63 R	328+80.00	C/L Spout Springs Road

REMAINDER = +/- 1.8 ACRES

91 JERRY R. PIRKLE
SEE SHEETS 41, 43

TESWT - PAR 91/SV212 EASW'T. FOR DEMO OF EXISTING STRUCTURE DE20574

PNT	OFFSET/	STATION/	ALIGNMENT
DE20572	74.99 L	333+40.00	C/L Spout Springs Road
DE20575	75.00 L	332+67.21	C/L Spout Springs Road
DE20632	110.00 L	332+56.06	C/L Spout Springs Road
DE21272	110.00 L	333+25.00	C/L Spout Springs Road
DE20572	74.99 L	333+40.00	C/L Spout Springs Road

REQD EASWT AREA = 2480.61 SF
REMAINDER = +/- 18 ACRES

DWESWT - PAR 91/SV212 - TRACT 1 REQ'D DRWY. EASW'T. DE20561

PNT	OFFSET/	STATION/	ALIGNMENT
DE20587	74.99 L	333+90.00	C/L Spout Springs Road
DE20588	74.99 L	333+60.00	C/L Spout Springs Road
DE20589	85.00 L	333+60.00	C/L Spout Springs Road
DE20590	85.00 L	333+90.00	C/L Spout Springs Road
DE20587	74.99 L	333+90.00	C/L Spout Springs Road

DWESWT - PAR 91/SV212 - TRACT 2 REQ'D DRWY. EASW'T. DE20196

PNT	OFFSET/	STATION/	ALIGNMENT
DE20591	74.99 L	335+25.00	C/L Spout Springs Road
DE20592	74.99 L	334+70.00	C/L Spout Springs Road
DE20593	130.00 L	334+70.00	C/L Spout Springs Road
DE20594	130.00 L	335+05.00	C/L Spout Springs Road
DE20591	74.99 L	335+25.00	C/L Spout Springs Road

STV 100 Years
3700 CRESTWOOD PARKWAY NW, SUITE 800
DULUTH, GEORGIA 30096
PHONE: (770)452-0797 FAX: (770)936-9171

DATE	REVISIONS	DATE	REVISIONS

HALL COUNTY
DEPARTMENT OF PUBLIC WORKS

RIGHT OF WAY DATA

PROJECT NO: 0015280
COUNTY: HALL
LAND LOT NO: N/A
LAND DISTRICT: N/A
GMD: 1419 / 392
DATE 9/28/22 SH 42 OF 46

SPOUT SPRINGS RD
Curve# 6
PI Sta: 346+78.01
N: 1506955.8550
E: 2382317.2930
DELTA: 31°05'38.4" (LT)
D: 03°49'10.99"
T: 417.31
L: 814.04
R: 1500.00
E: 56.97
e: 3.40%

REFERENCE POINT	NORTHING	EASTING
PC 342+60.69	1506548.5996	2382408.3574
STA. 345+00.00	1506776.9944	2382337.7677

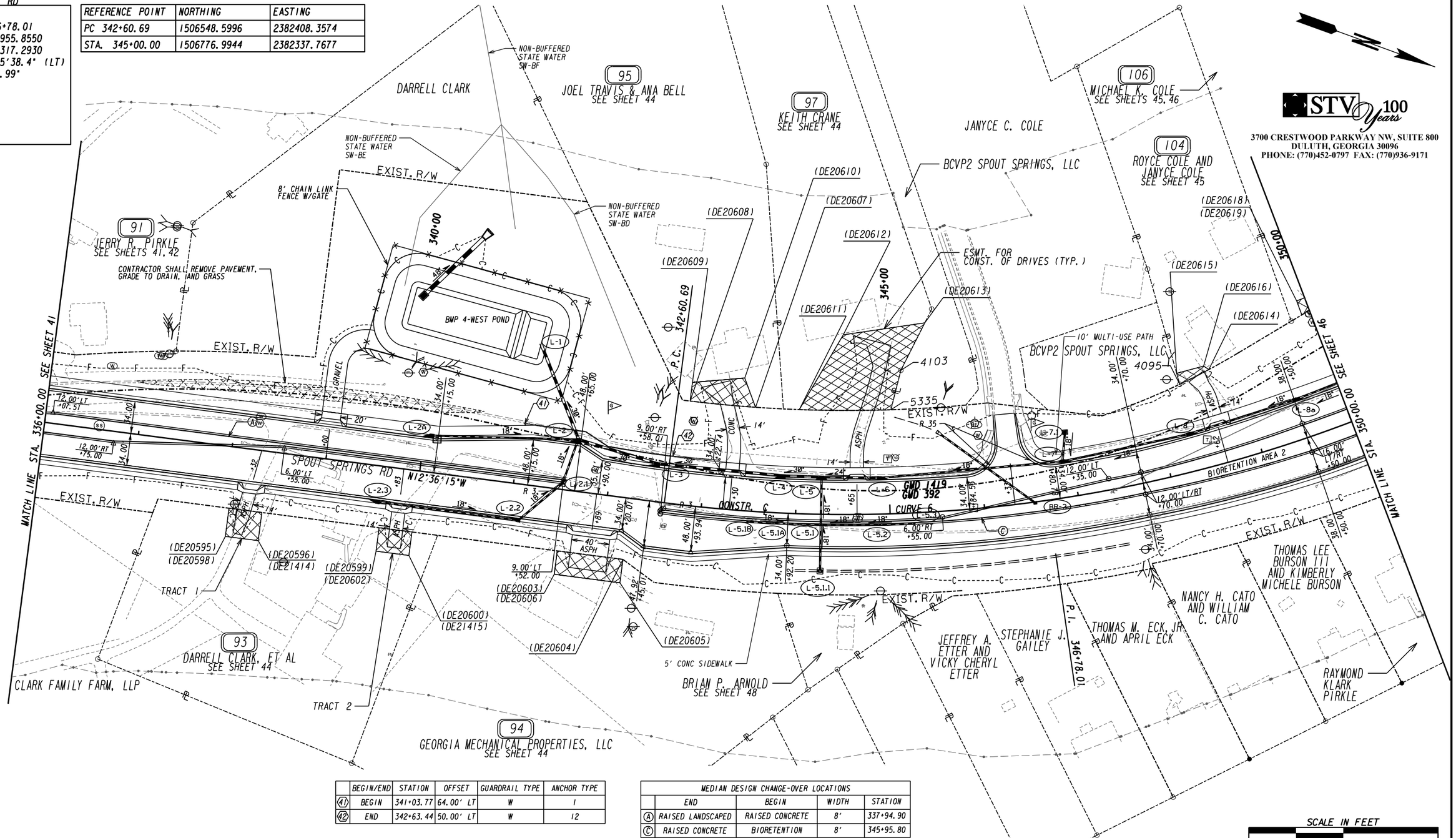

	BEGIN/END	STATION	OFFSET	GUARDRAIL TYPE	ANCHOR TYPE
41	BEGIN	341+03.77	64.00' LT	W	1
42	END	342+63.44	50.00' LT	W	12

MEDIAN DESIGN CHANGE-OVER LOCATIONS				
	END	BEGIN	WIDTH	STATION
A	RAISED LANDSCAPED	RAISED CONCRETE	8'	337+94.90
C	RAISED CONCRETE	BIORETENTION	8'	345+95.80

PROPERTY AND EXISTING R/W LINE
REQUIRED R/W LINE
CONSTRUCTION LIMITS
EASEMENT FOR CONSTR & MAINTENANCE OF SLOPES AND UTILITIES
EASEMENT FOR CONSTR OF SLOPES
EASEMENT FOR CONSTR OF DRIVES

BEGIN LIMIT OF ACCESS.....BLA
END LIMIT OF ACCESS.....ELA
LIMIT OF ACCESS
REQ'D R/W & LIMIT OF ACCESS
ORANGE BARRIER FENCE
ESA - ENV. SENSITIVE AREA (SEE ERIT TABLE)

DATE	REVISIONS		DATE	REVISIONS

STV 100 Years
3700 CRESTWOOD PARKWAY NW, SUITE 800
DULUTH, GEORGIA 30096
PHONE: (770)452-0797 FAX: (770)936-9171

HALL COUNTY
DEPARTMENT OF PUBLIC WORKS

RIGHT OF WAY PLANS

PROJECT NO: 0015280
COUNTY: HALL
LAND LOT NO: N/A
LAND DISTRICT: N/A
GMD: 1419 / 392
DATE 9/28/22 SH 43 OF 46

93 DARRELL CLARK, ET AL
SEE SHEET 43

DWESWT - PAR 93/SV232 - TRACT 1 REQ'D DRWY. EASM'T. DE20562

PNT	OFFSET/	STATION/	ALIGNMENT
DE20595	65.00 R	338+05.00	C/L Spout Springs Road
DE20596	65.00 R	338+40.00	C/L Spout Springs Road
DE21414	95.00 R	338+40.00	C/L Spout Springs Road
DE20598	95.00 R	338+05.00	C/L Spout Springs Road
DE20595	65.00 R	338+05.00	C/L Spout Springs Road

REMAINDER = +/- 1.5 ACRES

DWESWT - PAR 93/SV232 - TRACT 2 REQ'D DRWY. EASM'T. DE20563

PNT	OFFSET/	STATION/	ALIGNMENT
DE20599	65.00 R	339+65.00	C/L Spout Springs Road
DE20600	65.00 R	340+00.00	C/L Spout Springs Road
DE21415	90.00 R	340+00.00	C/L Spout Springs Road
DE20602	90.00 R	339+65.00	C/L Spout Springs Road
DE20599	65.00 R	339+65.00	C/L Spout Springs Road

94 GEORGIA MECHANICAL PROPERTIES, LLC
SEE SHEET 43

DWESWT - PAR 94/SV231 REQ'D DRWY. EASM'T. DE20200

PNT	OFFSET/	STATION/	ALIGNMENT
DE20603	65.00 R	341+55.00	C/L Spout Springs Road
DE20604	65.00 R	342+25.00	C/L Spout Springs Road
DE20605	90.00 R	342+25.00	C/L Spout Springs Road
DE20606	90.00 R	341+55.00	C/L Spout Springs Road
DE20603	65.00 R	341+55.00	C/L Spout Springs Road

REMAINDER = +/- 2.5 ACRES

95 JOEL TRAVIS & ANA BELL
SEE SHEET 43

DWESWT - PAR 95/SV210 REQ'D DRWY. EASM'T. DE20202

PNT	OFFSET/	STATION/	ALIGNMENT
DE20607	110.00 L	343+50.00	C/L Spout Springs Road

ARC LENGTH = 69.50
CHORD BEAR = S 14°34'59.4" E
LNTH CHORD = 69.49
RADIUS = 1390.00
DEGREE = 4°07'19.2"

DE20608	110.00 L	342+75.00	C/L Spout Springs Road
DE20609	130.00 L	342+75.00	C/L Spout Springs Road
DE20610	140.00 L	343+35.00	C/L Spout Springs Road
DE20607	110.00 L	343+50.00	C/L Spout Springs Road

REMAINDER = +/- 4.3 ACRES

97 KEITH CRANE
SEE SHEET 43

DWESWT - PAR 97/SV209 REQ'D DRWY. EASM'T. DE20205

PNT	OFFSET/	STATION/	ALIGNMENT
5335	110.00 L	345+04.44	C/L Spout Springs Road

ARC LENGTH = 96.78
CHORD BEAR = S 19°55'12.2" E
LNTH CHORD = 96.76
RADIUS = 1390.00
DEGREE = 4°07'19.2"

DE20611	110.00 L	344+00.00	C/L Spout Springs Road
DE20612	190.00 L	344+50.00	C/L Spout Springs Road
DE20613	200.00 L	345+49.31	C/L Spout Springs Road
4103	151.23 L	345+17.77	C/L Spout Springs Road
5335	110.00 L	345+04.44	C/L Spout Springs Road

REMAINDER = +/- 1.6 ACRES

STV 100 Years
3700 CRESTWOOD PARKWAY NW, SUITE 800
DULUTH, GEORGIA 30096
PHONE: (770)452-0797 FAX: (770)936-9171

DATE	REVISIONS	DATE	REVISIONS

HALL COUNTY
DEPARTMENT OF PUBLIC WORKS

RIGHT OF WAY DATA

PROJECT NO: 0015280
COUNTY: HALL
LAND LOT NO: N/A
LAND DISTRICT: N/A
GMD: 1419 / 392
DATE 9/28/22 SH 44 OF 46

104 ROYCE COLE AND JANYCE COLE
SEE SHEET 43

DWESMT - PAR 104/SY208 REQ'D DRWY. EASM'T. DE20213

PNT	OFFSET/		STATION/	ALIGNMENT
DE20614	100.00	L	348+69.57	C/L Spout Springs Road
ARC LENGTH = 34.52				
CHORD BEAR = S 46°50'06.5" E				
LNTH CHORD = 34.51				
RADIUS = 745.00				
DEGREE = 7°41'26.6"				
4095	93.02	L	348+33.45	C/L Spout Springs Road
DE20615	105.00	L	348+33.19	C/L Spout Springs Road
DE20616	105.00	L	348+65.00	C/L Spout Springs Road
DE20614	100.00	L	348+69.57	C/L Spout Springs Road
REMAINDER = +/- 1.0 ACRES				

106 MICHAEL K. COLE
SEE SHEETS 43, 46

DWESMT - PAR 106/SY207A REQ'D DRWY. EASM'T. DE20215

PNT	OFFSET/		STATION/	ALIGNMENT
DE20617	130.29	L	350+30.86	C/L Spout Springs Road
ARC LENGTH = 27.39				
CHORD BEAR = S 50°04'09.6" E				
LNTH CHORD = 27.39				
RADIUS = 945.17				
DEGREE = 6°03'43.0"				
4170	126.19	L	350+01.24	C/L Spout Springs Road
DE20618	124.33	L	349+90.00	C/L Spout Springs Road
DE20619	140.00	L	349+90.00	C/L Spout Springs Road
DE20620	140.00	L	350+31.31	C/L Spout Springs Road
DE20617	130.29	L	350+30.86	C/L Spout Springs Road
REMAINDER = +/- 1.4 ACRES				

STV 100 Years
3700 CRESTWOOD PARKWAY NW, SUITE 800
DULUTH, GEORGIA 30096
PHONE: (770)452-0797 FAX: (770)936-9171

DATE	REVISIONS	DATE	REVISIONS

HALL COUNTY
DEPARTMENT OF PUBLIC WORKS

RIGHT OF WAY DATA

PROJECT NO: 0015280
COUNTY: HALL
LAND LOT NO: N/A
LAND DISTRICT: N/A
GMD: 1419 / 392
DATE 9/28/22 SH 45 OF 46

5/24/2023	GPLOT-V8	0015280_60-46.dgn	SHEET NO.	TOTAL SHEETS
GoCC	gplotborder-V81-P0.tbl	GRWPLN	46	46

RICKY CURTIS CRANE

RICKY CURTIS CRANE

DENNIS BRYAN AND SANDRA BRYAN

CHARLES N. SWANN AND EVELYN B. SWANN

GHEORGHE TATU

106
MICHAEL K. COLE

JANYCE C. COLE

SEE SHEETS 43, 45

BAILEY FAMILY ENTERPRISES, LLC

CARMEN L. SOLIS, ET AL

AMY R. NASH

CURTIS J. CRANE

EXIST. R/W

EXIST. R/W

(DE20620)

CASEY KEN COFFEY

KELLY WRIGHT

(DE20617)

END CONSTRUCTION
SPOUT SPRINGS RD
TIE TO PROJECT
PI 0009679
STA. 350+91.09
N 1507269.3930
E 2382017.6873
END FULL DEPTH PAVEMENT

355+00

DENNIS B. BRYAN AND SANDRA L. BRYAN

JOSHUA MCNEAL AND GILLYAN R. MCNEAL

DEMETRIO CASTILLO

360+00

KALEB LOVE

QUINCY DR CONNECTOR
P10009679

HALL COUNTY BOARD OF EDUCATION

END PROJECT
SPOUT SPRINGS RD
STA. 351+91.00
N 1507341.6265
E 2381948.6636
EXIST. R/W

P.T. 350+74.73

P.I. 358+26.26

JOHNNY W. LOTT

EXIST. R/W

EXIST. R/W

GMD 1419
GMD 392

SEE SHEET 43

CONC

14'

8"

20

L=98

CONSTR. ℄ N43°41'54"W

SPOUT SPRINGS RD
P10009679

CURVE 7

N35°13'44"W

CURVE 6

MATCH LINE STA. 350+00.00

END RIGHT OF WAY ACQUISITION
STA. 350+31.31
N 1507225.7414
E 2382058.5299

P.C. 353+82.00

EXIST. R/W

JESSE SATTERFIELD AND SAMANTHA TURK

EDDIE W. COCHLING AND PAMELA R. HENKEL

JERRY R. PIRKLE

NON-BUFFERED STATE WATER SW-BC

EXIST. R/W

VIRGINIA LOTT CLARK AND CHARLES CURTIS CLARK

UNION CIR
P10009679

EXIST. R/W

EXIST. R/W

BETSY CLARK TURNER

VIRGINIA LOTT CLARK AND CHARLES CURTIS CLARK

P.T. 362+68.91

RAYMOND KLARK PIRKLE

EXIST. R/W

ELDERBERRY LN
P10009679

EXIST. R/W

RONALD E. EVANS

SPOUT SPRINGS RD
PI 0015280

Curve° 6
PI Sta° 346+78.01
N° 1506955.8550
E° 2382317.2930
DELTA° 31°05'38.4" (LT)
D° 03°49'10.99"
T° 417.31
L° 814.04
R° 1500.00
E° 56.97
e° 3.40%

SPOUT SPRINGS RD
PI 0009679

Curve° 7
PI Sta° 358+26.26
N° 1507800.9131
E° 2381509.7858
DELTA° 08°28'09.7° (RT)
D° 00°57'17.75°
T° 444.26
L° 886.91
R° 6000.00
E° 16.43
e° N/A

SCALE IN FEET
0 50 100 200

STV 100 Years
3700 CRESTWOOD PARKWAY NW, SUITE 800
DULUTH, GEORGIA 30096
PHONE: (770)452-0797 FAX: (770)936-9171

PROPERTY AND EXISTING R/W LINE
REQUIRED R/W LINE
CONSTRUCTION LIMITS
EASEMENT FOR CONSTR & MAINTENANCE OF SLOPES AND UTILITIES
EASEMENT FOR CONSTR OF SLOPES
EASEMENT FOR CONSTR OF DRIVES

BEGIN LIMIT OF ACCESS.....BLA
END LIMIT OF ACCESS.....ELA
LIMIT OF ACCESS
REQ'D R/W & LIMIT OF ACCESS
ORANGE BARRIER FENCE
ESA - ENV. SENSITIVE AREA
(SEE ERIT TABLE)

DATE	REVISIONS	DATE	REVISIONS

HALL COUNTY
DEPARTMENT OF PUBLIC WORKS

RIGHT OF WAY PLANS

PROJECT NO: 0015280
COUNTY: HALL
LAND LOT NO: N/A
LAND DISTRICT: N/A
GMD: 1419 / 392 / 1270
DATE 9/28/22 SH 46 OF 46

HALL COUNTY
GEORGIA We have it all in Hall

AGENDA ITEM

Consent Agenda

REPORT TO: **Work Session (07/10/23)**

REPORT TO: **Voting Meeting (07/13/23)**

ITEM NO: 389/2023

SUBJECT: Approve the Release of a $297,169.00 Irrevocable Letter of Credit for Streets and Stormwater Management Facilities in Magnolia Station Phase II Subdivision. Commission District 3.

Meetings:

Work Session Date: 07/10/23 **Voting Meeting Date:** 07/13/23

Executive Summary:

Presenter: BN

Recommendation:
Approve

Purpose of Request:
Approve the Release of a $297,169.00 Irrevocable Letter of Credit for Streets and Stormwater Management Facilities in Magnolia Station Phase II Subdivision.

Commission District 3

History:

Facts and Issues:

Options:

Funding Requested	$ 0.00
Are funds within current budget?	No
Source of Funds	
Does the action involve a Resolution, Ordinance, Contract, Agreement, etc.?	No
Has it been reviewed by the County Attorney?	Yes
Is there a deadline for this item?	

Approvals:

Submit	Approve	Budget	Finance
WS	BN	TS	WG

Attorney	Administration	Clerk
VS	CR	JR

Attachments:

Irrevocable Letter of Credit
Final Plat Information

PEACH STATE
BANK & TRUST

IRREVOCABLE LETTER OF CREDIT

Hall County Board of Commissioners
P.O. Drawer 1435
Gainesville, GA 30503

RE: **Magnolia Station Phase II**
Lula Capital, LLC
4705 Hamilton Mill Rd Ste 300
Buford, GA 30518

To Whom It May Concern:

The purpose of this Irrevocable Letter of Credit is one of the following:

- Public subdivisions/developments – To induce the Hall County Board of Commissioners to approve the street system as shown on the final plat, to induce the Hall County Board of Commissioners to accept the streets as shown on the final plat for public maintenance, and to ensure the completion of the project as per the approved plans and the regulations of Hall County, Georgia.

- Private subdivisions/developments – To induce the Hall County Board of Commissioners to approve the street system as shown on the final plat and to ensure the completion of the project as per the approved plans and the regulations of Hall County, Georgia.

Peach State Bank & Trust (Banking institution hereinafter referred to as "Issuer") hereby establishes its Irrevocable Letter of Credit No. **1001137100** in favor of Hall County, Georgia, for the account of **Lula Capital, LLC** (Owner/developer) up to the aggregate amount of **Two hundred Ninety seven thousand one hundred sixty nine** dollars* effective immediately and available by your draft(s) drawn at sight on the Issuer when accompanied by this Irrevocable Letter of Credit. This Irrevocable Letter of Credit is to cover the value of materials and work associated with the construction of **Magnolia Station Phase II** (Name of project).

The owner/developer responsibilities are as follows:

All construction of the street system of **Magnolia Station Phase II** (Name of project) will be maintained for fifteen (15) months according to the terms and requirements as shown on the recorded final plat and of the Subdivision Regulations

PEACH STATE
BANK & TRUST

in force in Hall County, Georgia. Sidewalks will be completed throughout entire subdivision as shown on the recorded final plat within one fifteen (15) months of the signing of said plat.

The sidewalks, cuts, fills, sub-grades, shoulders, pavement, grassing, storm water management facilities, and traffic signs in **Magnolia Station Phase II** (Name of project) must be properly maintained and free from faults in design, materials, and workmanship as shown on the recorded final plat and as set out in the Subdivision Regulations in force in Hall County, Georgia.

Hall County will pursue the collection of funds for deficiencies upon the elapsing of one (1) year from final platting ***and*** after the compliance date given in the 45-day written notice.

The condition of the obligation created hereunder is such that the Issuer hereby agrees that all drafts drawn under and in compliance with the terms of this Irrevocable Letter of Credit will be duly honored if drawn and presented for payment to the Issuer's office upon the failure of Owner/developer to meet the responsibilities as outlined in the preceding paragraph. Upon full compliance, this obligation shall be void; otherwise, it shall remain in force. Jurisdiction for any civil litigation necessary for collection of bond claims hereunder shall be in the Superior Court of Hall County, Georgia.

This Irrevocable Letter of Credit is hereby issued on **June 21, 2022** (Date) and expires on **June 21, 2024** (Date, minimum 12 months from date of issuance), and the Issuer will have no more liability after that date. When the indicated expiration date falls on Sunday or a legal holiday, or for any reason the Issuer is not open for business, the expiration date shall be extended to the next succeeding business day.

IN WITNESS WHEREOF the Issuer has set its hand and affixed its seal on this day of **June 21, 2022.**

Witness

Peach State Bank & Trust
Issuer (Banking Institution Name)

Notary Public

By: _____
S. Keith Brady, Senior Vice President

My Commission Expires: _____

[Seal]

325 Washington Street – P.O. Box 290 – Gainesville, GA 30503 – 770-536-1100 – Fax 770-536-2525

Final Plat Information

Consider release of $297,169.00 Irrevocable Letter of Credit for Streets and Stormwater Management Facilities in Magnolia Station Phase II Subdivision.

Subject Subdivision is located off of Lula Road (Highway 52).

NAME OF SUBDIVISION:	Magnolia Station Phase II
NAME OF OWNER/DEVELOPER:	Lula Capital, LLC.
ADDRESS:	4705 Hamilton Mill Road, Suite 300 Buford, GA 30518
TYPE OF MAINTENANCE BOND:	Irrevocable Letter of Credit
DATE OF BOND:	June 21, 2022
AMOUNT OF BOND:	$297,169.00
FINANCIAL INSTITUTION: AND ADDRESS:	Peach State Bank & Trust P.O. Box 290 Gainesville, GA 30503
Account No.:	1001137100

COMM. DIST.	STREET NAME	R/W IN FEET	LENGTH IN FEET	WIDTH IN FEET	TYPE OF SURFACE	STATE REF. NO.
3	Magnolia Station Drive	50	719	20	P.M.	-----
3	River Station Drive	50	1911	20	P.M.	-----

NOTES:

NUMBER OF LOTS:	56
CURB & GUTTER:	24" Rolled Back
TOTAL ACRES OF S/D:	49.96 AC

HALL COUNTY
GEORGIA We have it all in Hall

AGENDA ITEM

Consent Agenda

REPORT TO: **Work Session (07/10/23)**

REPORT TO: **Voting Meeting (07/13/23)**

ITEM NO: 388/2023

SUBJECT: Approve the Acceptance of a $297,169.00 Guaranty Performance/Maintenance Agreement for Streets and Stormwater Management Facilities in Magnolia Station Phase II Subdivision. Commission District 3.

Meetings:

Work Session Date: 07/10/23 **Voting Meeting Date:** 07/13/23

Executive Summary:

Presenter: BN

Recommendation:
Approve

Purpose of Request:
Approve the Acceptance of a $297,169.00 Guaranty Performance/Maintenance Agreement for Streets and Stormwater Management Facilities in Magnolia Station Phase II Subdivision.

Commission District 3

History:

Facts and Issues:

Options:

Funding Requested	$ 0.00
Are funds within current budget?	No
Source of Funds	
Does the action involve a Resolution, Ordinance, Contract, Agreement, etc.?	No
Has it been reviewed by the County Attorney?	Yes
Is there a deadline for this item?	

Approvals:

Submit	Approve	Budget	Finance
WS	BN	TS	WG

Attorney	Administration	Clerk
VS	CR	JR

Attachments:

Guaranty Performance/Maintenance Agreement
Final Plat Information

STATE OF GEORGIA,
COUNTY OF HALL

Bond No. GSA2400697

GUARANTY PERFORMANCE/MAINTENANCE AGREEMENT

KNOW ALL MEN BY THESE PRESENTS, that we, Lula Capital LLC (owner/principal, hereinafter referred to as "Principal"), and The Gray Casualty & Surety Company (surety), a company entitled and licensed to do business as a surety in the State of Georgia and Hall County, (hereinafter referred to as "Surety"), are held and bound unto Hall County, Georgia in the sum of Two Hundred Ninety-Seven Thousand One Hundred Sixty-Nine and 00/100 Dollars ($ 297,169.00)* (hereinafter referred to as "bonded amount") for payment of which we bind ourselves, our heirs, executors, administrators and assigns.

WHEREAS, Lula Capital LLC (principal) is owner of the Subdivision known as Magnolia Station Phase 2 Subdivision, which subdivision is shown on a plat prepared by Joseph R. Wells, Georgia Registered Surveyor Number 3120, and

WHEREAS, Lula Capital LLC (principal) wishes to induce the Board of Commissioners of Hall County, Georgia to approve the street system shown on the Final Plat of Magnolia Station Phase 2 Subdivision for recording purposes, and

WHEREAS, Lula Capital LLC (principal) wishes to induce the Board of Commissioners of Hall County, Georgia to accept the streets shown on the Final Plat of Magnolia Station Phase 2 Subdivision for public maintenance (not applicable to private developments);

Lula Capital LLC (principal) and The Gray Casualty & Surety Company (surety) agree in consideration of the foregoing,

NOW, THEREFORE BE IT RESOLVED, Lula Capital LLC (principal) agrees that all construction of the street system of Magnolia Station Phase 2

Subdivision will be completed and maintained for fifteen (15) months according to the terms and requirements as shown on the recorded Final Plat and of the Subdivision Regulations in force in Hall County, Georgia.

Lula Capital LLC (principal), and

The Gray Casualty & Surety Company (surety) agree to the following:

Sidewalks will be completed throughout entire subdivision as shown on recorded final plat within one (1) year of signing of said final plat. One inch of "F" mix asphalt may be placed anytime prior to final platting or up to one (1) year after final plat approval. In addition, Principal and Surety agree that if either the sidewalks, cuts, fills, sub-grades, shoulders, pavement, grassing, storm water management facilities, or traffic signs in Magnolia Station Phase 2 Subdivision are improperly maintained or are found to be defective from faults in design, materials or workmanship as shown on the recorded Final Plat, or as set out in the Subdivision Regulations in force in Hall County, Georgia, then upon demand from Hall County,

The Gray Casualty & Surety Company (surety) shall pay the bond amount to Hall County.

Terms of Guaranty:

Lula Capital LLC (principal) and

The Gray Casualty & Surety Company (surety) shall be bound by the provisions of this agreement until a properly authorized letter is received by

The Gray Casualty & Surety Company (surety) from Hall County authorizing release of

Lula Capital LLC (principal) and

The Gray Casualty & Surety Company (surety) from this Guaranty Agreement.

NOTWITHSTANDING the above provisions, this Guaranty Performance/Maintenance Agreement is hereby issued on 06/26/2023 (Date) and expires on 06/26/2025 (Date, minimum 24 months from date of issuance), and the Issuer will have no more liability after that date. When

the indicated expiration date falls on Sunday or a legal holiday, or for any reason the Issuer is not open for business, the expiration date shall be extended to the next succeeding business day. Jurisdiction for any civil litigation necessary for collection of bond claims hereunder shall be in the Superior Court of Hall County, Georgia.

IN WITNESS WHEREOF, the undersigned have hereunto signed their names and affixed their seals, this 26th day of June, 2023.

- Lula Capital LLC
  PRINCIPAL
  By: _____ COO/CFO
  (Corporate Officer or other authorized representative)

  Principal's Address:
  4705 Hamilton Mill Road, Suite 300
  Buford , GA 30518

- The Gray Casualty & Surety Company
  SURETY
  By: Julia C. McElligott
  (Authorized Representative) Julia C. McElligott, Attorney-in-Fact

  Surety's Address:
  P.O. Box 6202
  Metairie, LA 70009 - 6202

- Approved:
  Hall County
  By: _____
  (Chairman)

* The amount of the bond equals 30 percent of all completed infrastructure including base, paving, grassing, stormwater management facilities, and sidewalks plus 100 percent of the cost of all incomplete infrastructure such as remaining sidewalks and asphalt topping. The unit cost data used in the calculations will be based upon the latest Georgia Department of Transportation (GADOT) Item Mean Summary, or the latest Hall County contract data, whichever is higher.

McGriff Insurance Services
06/27/2022 11:32 556512064425

THE GRAY INSURANCE COMPANY
THE GRAY CASUALTY & SURETY COMPANY

GENERAL POWER OF ATTORNEY

Bond Number: GSA2400697 **Principal:** Lula Capital LLC

Project: Magnolia Station Phase 2

KNOW ALL BY THESE PRESENTS, THAT The Gray Insurance Company and The Gray Casualty & Surety Company, corporations duly organized and existing under the laws of Louisiana, and having their principal offices in Metairie, Louisiana, do hereby make, constitute, and appoint: **Heather Segrist, Julia C. McElligott, Bobbi D. Pendleton, Kenneth J. Peeples, Christopher A. Lydick, Phoebe C. Honeycutt, Jason Lee Sayers, Adam Pfanmiller, James Holden Keen, Ronda W. Bush, Camille Moye Edwards, Samantha Argenio, Margo G. Roberts, David Liggett, Joseph Zoller, Michael McCreadie, and Megan S. Bartman of Durham, North Carolina jointly and severally** on behalf of each of the Companies named above its true and lawful Attorney(s)-in-Fact, to make, execute, seal and deliver, for and on its behalf and as its deed, bonds, or other writings obligatory in the nature of a bond, as surety, contracts of suretyship as are or may be required or permitted by law, regulation, contract or otherwise, provided that no bond or undertaking or contract of suretyship executed under this authority shall exceed the amount of $15,000,000.00.

This Power of Attorney is granted and is signed by facsimile under and by the authority of the following Resolutions adopted by the Boards of Directors of both The Gray Insurance Company and The Gray Casualty & Surety Company at meetings duly called and held on the 26th day of June, 2003.

"RESOLVED, that the President, Executive Vice President, any Vice President, or the Secretary be and each or any of them hereby is authorized to execute a power of Attorney qualifying the attorney named in the given Power of Attorney to execute on behalf of the Company bonds, undertakings, and all contracts of surety, and that each or any of them is hereby authorized to attest to the execution of such Power of Attorney, and to attach the seal of the Company; and it is

FURTHER RESOLVED, that the signature of such officers and the seal of the Company may be affixed to any such Power of Attorney or to any certificate relating thereto by facsimile, and any such Power of Attorney or certificate bearing such facsimile signature or facsimile seal shall be binding upon the Company now and in the future when so affixed with regard to any bond, undertaking or contract of surety to which it is attached.

IN WITNESS WHEREOF, The Gray Insurance Company and The Gray Casualty & Surety Company have caused their official seals to be hereinto affixed, and these presents to be signed by their authorized officers this 28th day of October, 2021.

THE GRAY INSURANCE COMPANY SEAL

By:

Michael T. Gray
President
The Gray Insurance Company

Cullen S. Piske
President
The Gray Casualty & Surety Company

THE GRAY CASUALTY & SURETY COMPANY SEAL

State of Louisiana
ss:
Parish of Jefferson

On this 28th day of October, 2021, before me, a Notary Public, personally appeared Michael T. Gray, President of The Gray Insurance Company, and Cullen S. Piske, President of The Gray Casualty & Surety Company, personally known to me, being duly sworn, acknowledged that they signed the above Power of Attorney and affixed the seals of the companies as officers of, and acknowledged said instrument to be the voluntary act and deed, of their companies.

Leigh Anne Henican
Notary Public
Notary ID No. 92653
Orleans Parish, Louisiana

Leigh Anne Henican
Notary Public, Parish of Orleans State of Louisiana
My Commission is for Life

I, Mark S. Manguno, Secretary of The Gray Insurance Company, do hereby certify that the above and forgoing is a true and correct copy of a Power of Attorney given by the companies, which is still in full force and effect. IN WITNESS WHEREOF, I have set my hand and affixed the seals of the Company this 26th day of June , 2023 .

I, Leigh Anne Henican, Secretary of The Gray Casualty & Surety Company , do hereby certify that the above and forgoing is a true and correct copy of a Power of Attorney given by the companies, which is still in full force and effect. IN WITNESS WHEREOF, I have set my hand and affixed the seals of the Company this 26th day of June , 2023 .

THE GRAY INSURANCE COMPANY SEAL

THE GRAY CASUALTY & SURETY COMPANY SEAL

Final Plat Information

Consider acceptance of $297,169.00 Guaranty Performance/Maintenance Agreement for Streets and Stormwater Management Facilities in Magnolia Station Phase II Subdivision.

Subject Subdivision is located off of Lula Road (Highway 52).

NAME OF SUBDIVISION:	Magnolia Station Phase II
NAME OF OWNER/DEVELOPER:	Lula Capital, LLC.
ADDRESS:	4705 Hamilton Mill Road, Suite 300 Buford, GA 30518
TYPE OF MAINTENANCE BOND:	Guaranty Performance/Maintenance
DATE OF BOND:	June 26, 2023
AMOUNT OF BOND:	$297,169.00
FINANCIAL INSTITUTION: AND ADDRESS:	The Gray Casualty & Surety P.O. Box 6202 Metairie, LA 70009-6202
Account No.:	GSA2400697

COMM. DIST.	STREET NAME	R/W IN FEET	LENGTH IN FEET	WIDTH IN FEET	TYPE OF SURFACE	STATE REF. NO.
3	Magnolia Station Drive	50	719	20	P.M.	----
3	River Station Drive	50	1911	20	P.M.	----

NOTES:

NUMBER OF LOTS:	56
CURB & GUTTER:	24" Rolled Back
TOTAL ACRES OF S/D:	49.96 AC

HALL COUNTY
GEORGIA We have it all in Hall

AGENDA ITEM

Consent Agenda

REPORT TO: **Work Session (07/10/23)**

REPORT TO: **Voting Meeting (07/13/23)**

ITEM NO: 382/2023

SUBJECT: Approve the purchase of Replacement VxRail Hardware and Software for the Sheriff's Office to Ahead, Inc. of Chicago, IL, in the amount of $440,016.26.

Meetings:

Work Session Date: 07/10/23 **Voting Meeting Date:** 07/13/23

Executive Summary:

Presenter: SM

Recommendation:
Approve purchase and installation of VxRail.

Purpose of Request:
Replacement of VxRail for support and storage of Sheriff's Office Records and Jail Management Systems recommended and spec'd by MIS

History:

Facts and Issues:
The State of GA, Department of Administrative Services, State Purchasing Division competively bid Contract #99999-001-SPD0000139-0001 for Enterprise Infrastructure with Dell Marketing LP is valid until 11/08/2023.

Options:

Funding Requested	$ 440,016.26
Are funds within current budget?	Yes
Source of Funds	SPLOST VIII
Does the action involve a Resolution, Ordinance, Contract, Agreement, etc.?	No
Has it been reviewed by the County Attorney?	Yes
Is there a deadline for this item?	2023-07-21

Approvals:

Submit	Approve	Purchasing	Budget
SC	SC	AP	TS
Finance	**Attorney**	**Administration**	**Clerk**
WG	VS	CR	JR

Attachments:
Financial Supplement
VxRail Quote - AHEAD
State Purchasing Division Contract

HALL COUNTY BOARD OF COMMISSIONERS
FINANCIAL SUPPLEMENT REPORT

AGENDA ITEM 382/2023

Funds Requested: $ 440,016.26

Request Budgeted: Yes

Proposed Source of Funding:

SPLOST VIII

Budget Transfer Requested:

No

Funding Source Items:

Fiscal Year	Fund	Division	Account	Amount
FY2024	324-SPLOST VIII	1535-MIS	542400-COMPUTERS AND SOFTWARE	$440,016.26

Budget Transfer Items:

Additional Information/Comments:

Contact for Questions: SM

Phone: 770-531-6887

AHEAD

AHEAD, Inc.
401 Michigan Avenue
Suite 3400
Chicago, IL 60611

Ahead Client Director:
Chris Conte
chris.conte@ahead.com

Ahead Quote Number
AHD2023180533 - 10
Reference Number:
Merged [Ahead PS All-8][SFPs-Dell V3 - 9]
Quote Date:
6/22/2023
Expiration Date:
7/22/2023

Shipping Address:
Hall County
Chris Howington
225 Green St SE, Suite 204
Gainesville GA 30501

SWS14220254-V0
25296663
RQN202302230031

Billing Address:
Hall County
Post Office Box 1435 2875 Browns Bridge Road, 4th Floor
Gainesville GA 30503
(770) 531-6707

MPA:

Payment Terms:
Net 30

Client Operations Specialist
Shonda Yarbrough
shonda.yarbrough@ahead.com

Hall - Hall County Sheriff - VxRail

	QTY	Part Number	Description	Unit Price	Extended Price
AHEAD Services-8: AHD2023180533 - 6					***$37,136.00***
Services	1	ACD-AHS-CVI-VXRA-L1	VxRail Cluster Deployment	$2,950.00	$2,950.00
Services	1	ACD-AHS-CVI-VXRA-L1	VxRail Cluster Deployment	$2,950.00	$2,950.00
Services	1	ACD-AHS-CVI-VXRA-L1	VxRail Cluster Deployment	$2,950.00	$2,950.00
Services	1	ACD-AHS-CVI-VXRA-L1	VxRail Cluster Deployment	$2,950.00	$2,950.00
Services	1	ACD-AHS-NET-L2SW	Layer 2 Switch Deployment	$4,489.00	$4,489.00
Services	1	ACD-ADV-CVI	Data Center Rack Installation	$4,197.00	$4,197.00
Services	1	ACD-ADV-CVI	VMware VM Migration	$16,650.00	$16,650.00
RecoverPoint for Virtual Machine-9 SWS14220254-V0					***$0.08***
Software	4	210-ARZC	Recover Point for Virtual Machine	$0.02	$0.08
Maintenance - Software	4	865-3443	3 Years ProSupport Mission Critical RecoverPoint for Virtual Machines Sftwr Spt-Contract - 36.00 MNTHS	$0.00	$0.00
Services	4	900-9997	On-Site Installation Declined	$0.00	$0.00
Software	4	626-BBBG	Storage Software Info	$0.00	$0.00
Software	4	142-BBNV	HCIA RecoverPoint for VMs for 1 node	$0.00	$0.00
VxRail E660H/F-9 SWS14220254-V0					***$365,739.36***
Hardware	4	210-BBGQ	VxRail E660F, All Flash	$4,355.16	$17,420.64
Hardware	4	329-BDWH	PSNT Info	$0.00	$0.00
Hardware	4	379-BENB	vSAN Node	$0.00	$0.00
Hardware	4	384-BDFH	VxRail E660/F/N PV670F Firmware Lock	$0.00	$0.00
Software	4	634-BZPQ	VxRail Software 7.0.370 Factory Install	$0.00	$0.00
Software	4	379-BDYQ	No Transformational License Agreement	$0.00	$0.00
Hardware	4	321-BGHI	2.5" Chassis with up to 10 Hard Drives (SAS/SATA) including max of 4 Universal Drives, 3 PCIe Slots, 2 CPU	$249.66	$998.64
Hardware	4	379-BDSR	No GPU Enablement	$0.00	$0.00
Hardware	4	325-BEBP	VxRail 1U Bezel V2	$68.88	$275.52
Hardware	4	338-CBWK	Intel Xeon Silver 4314 2.4G, 16C/32T, 10.4GT/s, 24M Cache, Turbo, HT (135W) DDR4-2666	$702.30	$2,809.20
Hardware	4	338-CBWK	Intel Xeon Silver 4314 2.4G, 16C/32T, 10.4GT/s, 24M Cache, Turbo, HT (135W) DDR4-2666	$702.30	$2,809.20
Hardware	4	379-BDCO	Additional Processor Selected	$0.00	$0.00
Hardware	4	370-AEVR	3200MT/s RDIMMs	$0.00	$0.00
Hardware	4	540-BCRT	Intel Ethernet X710 Quad Port 10GbE SFP+, OCP NIC 3.0	$435.98	$1,743.92
Hardware	4	461-AADZ	No Trusted Platform Module	$0.00	$0.00
Hardware	4	770-BDMU	Strain Relief Bar	$13.42	$53.68
Hardware	4	770-BECD	ReadyRails Sliding Rails Without Cable Management Arm or Strain Relief Bar	$68.88	$275.52
Hardware	4	450-AKLF	Dual, Hot-Plug, Power Supply Redundant (1+1), 1100W MM Titanium	$660.68	$2,642.72
Maintenance - Software	4	863-1623	3 Years ProSupport Mission Critical vSphere Ent Plus for 1 Proc Sftwr Spt-Contract - 36.00 MNTHS	$0.00	$0.00
Hardware	4	329-BHKC	VxRail E660F Branding	$25.44	$101.76
Maintenance - Software	4	878-0138	Dell Hardware Limited Warranty - 36.00 MNTHS	$230.22	$920.88
Maintenance - Hardware	4	878-0648	ProSupport Mission Critical 4-Hour 7X24 Onsite Service with Emergency Dispatch 3 Years - 36.00 MNTHS	$2,185.04	$8,740.16
Maintenance - Hardware	4	878-0649	ProSupport Mission Critical 7x24 Technical Support and Assistance 3 Years - 36.00 MNTHS	$3,321.92	$13,287.68
Maintenance - Software	4	989-3439	Thank you choosing Dell ProSupport. For tech support, visit //www.dell.com/support or call 1-800- 945-3355 - 36.00 MNTHS	$0.00	$0.00
Hardware	4	379-BEWY	Informational Purposes Only	$0.00	$0.00
Hardware	4	825-8623	Certified Deployment Partner T1 or Distributors	$0.00	$0.00
Hardware	4	343-BBQY	R650 Dell/EMC label (BIS) for 2.5" Chassis	$0.00	$0.00
Hardware	4	389-DYIB	PowerEdge R650 CE, CCC, Marking	$0.00	$0.00
Hardware	4	379-BDSW	SAS/SATA/NVMe Capable Backplane	$0.00	$0.00
Hardware	4	340-CWLR	E660/F Shipping, DAO	$0.00	$0.00
Hardware	4	340-CUQN	R650 Ship 4x3.5, 10x2.5, 8x2.5 NVMe	$22.64	$90.56
Hardware	4	379-BEID	10x2.5 Front Storage	$0.00	$0.00
Hardware	4	330-BBVV	VxRail E660/F, Riser Config 0, 2CPU, 2A+3A, 2x16LP, 1x8LP	$142.50	$570.00
Hardware	4	329-BFGW	PowerEdge R650 Motherboard with Broadcom 5720 Dual Port 1Gb On-Board LOM	$0.00	$0.00
Hardware	4	412-AAVP	Heatsink for 2 CPU configuration (CPU less than or equal to 165W)	$0.00	$0.00
Hardware	4	370-AAIP	Performance Optimized	$0.00	$0.00
Hardware	4	780-BCQQ	C35, No RAID, VxRail E660/F	$0.00	$0.00
Hardware	4	405-AAXY	Dell HBA355i Controller Front	$332.42	$1,329.68
Hardware	4	750-ACFQ	Front PERC Mechanical Parts, rear load	$0.00	$0.00
Hardware	4	403-BCMB	BOSS-S2 controller card + with 2 M.2 480GB (RAID 1)	$785.52	$3,142.08
Hardware	4	403-BCNP	BOSS Cables and Bracket for R650	$23.12	$92.48
Software	4	385-BBQV	iDRAC9, Enterprise 15G	$226.08	$904.32
Hardware	4	379-BCQY	iDRAC Group Manager, Disabled	$0.00	$0.00
Software	4	379-BCSG	iDRAC,Legacy Password	$0.00	$0.00
Hardware	4	379-BCRB	DHCP with Zero Touch Configuration	$0.00	$0.00
Hardware	4	750-ADIH	4 High Performance Fans for 2 CPU	$92.00	$368.00
Hardware	4	350-BBXM	No Quick Sync	$0.00	$0.00
Hardware	4	631-AACK	No Systems Documentation, No OpenManage DVD Kit	$0.00	$0.00
Hardware	4	387-BBEY	No Energy Star	$0.00	$0.00
Hardware	4	800-BBDM	UEFI BIOS Boot Mode with GPT Partition	$0.00	$0.00
Hardware	4	350-BCFX	E660F Luggage Tag	$0.00	$0.00
Hardware	64	370-AGDS	32GB RDIMM, 3200MT/s, Dual Rank 16Gb BASE x8	$739.74	$47,343.36
Hardware	8	400-BKGF	1.6TB Enterprise NVMe Mixed Use AG Drive U.2 Gen4 with carrier	$1,671.46	$13,371.68
Hardware	24	345-BCTI	7.68TB SSD vSAS Read Intensive 12Gbps 512e 2.5in Hot-Plug ,AG Drive SED, 1DWPD	$4,063.80	$97,531.20
Hardware	8	492-BBDI	C13 to C14, PDU Style, 12 AMP, 6.5 Feet (2m) Power Cord, North America	$10.16	$81.28
Hardware	16	470-AAGP	Dell Networking, Cable, SFP+ to SFP+, 10GbE, Copper Twinax Direct Attach Cable, 3 Meter	$48.54	$776.64
Software	8	149-BBST	VxRail VMware, vSAN Advanced, 3 Years	$0.00	$0.00

Software	8	634-BYVP	VxRail HCI System Software, A	$4,532.78	$36,262.24
Software	24	634-BVNI	VxRail HCI System Software, Capacity Drive 7.68TB vSAS SSD	$1,531.10	$36,746.40
Hardware	64	634-BYME	VxRail HCI System Software Memory, 32GB	$196.30	$12,563.20
Software	8	151-BBXO	VxRail VMware vSphere Enterprise Plus for 1 processor, 3 Years	$3,808.30	$30,466.40
Maintenance - Software	8	863-1859	3 Years ProSupport Mission Critical vSphere Ent Plus for 1 Proc Sftwr Spt-Maint - 36.00 MNTHS	$2,408.84	$19,270.72
Maintenance - Software	8	823-4116	ProSupport Mission Critical, vSAN, Advanced, 1 Processor, 3 Years - 36.00 MNTHS	$1,593.70	$12,749.60
APC Metered Rack PDU-9 SWS14220254-V0					***$2,804.04***
Hardware	2	A7284209	APC Metered Rack PDU AP8841 - 0U - 208V NEMA L6-30 Input / (36) C13 & (6) C19 Output	$1,402.02	$2,804.04
Dell EMC VxRail NetShelter-9 SWS14220254-V0					***$4,281.78***
Hardware	1	AB635695	Dell EMC VxRail NetShelter SX 42U 600mm Wide x 1200mm Deep Enclosure with Sides Black	$4,281.78	$4,281.78
Dell Networking S4148-9 SWS14220254-V0					***$29,975.00***
Hardware	2	210-ALSJ	Dell EMC Switch S4148F-ON, 1U, 48x10GbE SFP+, 4xQSFP28, 2xQSFP+, IO to PSU , 2 PSU	$9,477.20	$18,954.40
Software	2	619-AMIU	OS10 Enterprise S4148F-ON	$2,381.56	$4,763.12
Hardware	2	343-BBGC	Dell EMC Networking S4100-ON Americas User Guide	$1.60	$3.20
Maintenance - Hardware	2	813-0806	Dell Hardware Limited Warranty 1 Year - 12.00 MNTHS	$79.14	$158.28
Maintenance - Hardware	2	813-0840	ProSupport:Next Business Day Onsite Service After Problem Diagnosis, 1 Year - 12.00 MNTHS	$1.72	$3.44
Maintenance - Hardware	2	813-0842	ProSupport:Next Business Day Onsite Service After Problem Diagnosis, 2 Years Extended - 24.00 MNTHS	$352.04	$704.08
Maintenance - Hardware	2	813-0888	ProSupport:7x24 HW/SW Tech Support and Assistance, 3 Years - 36.00 MNTHS	$1,183.10	$2,366.20
Maintenance - Hardware	2	975-3461	Dell Limited Hardware Warranty Extended Year(s) - 36.00 MNTHS	$0.00	$0.00
Maintenance - Software	2	989-3439	Thank you choosing Dell ProSupport. For tech support, visit //www.dell.com/support or call 1-800- 945-3355 - 36.00 MNTHS	$0.00	$0.00
Maintenance - Hardware	2	997-6306	Info 3rd Party Software Warranty provided by Vendor - 36.00 MNTHS	$0.00	$0.00
Hardware	2	825-8623	Certified Deployment Partner T1 or Distributors	$0.00	$0.00
Maintenance - Software	2	848-8532	3 Years ProSupport OS10 Enterprise Software Support-Maintenance - 36.00 MNTHS	$500.12	$1,000.24
Software	4	407-BCZR	Dell Networking, Transceiver, SFP+, 10GbE, SR, 850nm Wavelength, 300m Reach	$218.34	$873.36
Hardware	6	407-BCZT	Dell Networking, Transceiver, SFP, 1000BASE-T	$87.34	$524.04
Hardware	2	470-ABOU	Dell Networking Cable, 100GbE QSFP28 to QSFP28, Passive Copper Direct Attach Cable, 0.5 Meter	$82.04	$164.08
Software	4	470-BBDD	Dell Networking, Cable, SFP+ to SFP+, 10GbE, Copper Twinax Direct Attach Cable, 3 Meter	$27.80	$111.20
Hardware	4	470-ACLK	Dell Networking Cable, OM4 LC/LC Fiber Cable, (Optics required), 5 Meter	$76.74	$306.96
Hardware	4	450-AASX	Dell Networking, Jumper Cord, 250V, 12A, 2 Meters, C13/C14, US	$5.30	$21.20
Hardware	4	450-AASX	Dell Networking, Jumper Cord, 250V, 12A, 2 Meters, C13/C14, US	$5.30	$21.20
Extreme SFP's-9 RQN202302230031					***$80.00***
Hardware	4	10301	10301 Extreme Networks 10Gbps 10GBase-SR Multi-mode Fiber 300m 850nm Duplex LC Connector SFP+ Transceiver Module	$20.00	$80.00

Hardware:	$233,551.86
Software:	$110,127.12
Maintenance:	$59,201.28
Managed Services:	$0.00
Services:	$37,136.00
Training:	$0.00
Web Services:	$0.00
Total Investment:	**$440,016.26**

Acceptance of this quote authorizes Ahead to invoice the party indicated herein ("Customer"). Any Services covered by an Ahead Service Brief shall be invoiced in advance and in full, regardless of whether or not such Services have been completed. Ahead reserves the right to make partial shipments. Customer acknowledges that it has read the Terms and Conditions, linked below, and those Terms and Conditions shall govern and apply, unless a previously executed agreement governing the sale of products exists between Ahead and Customer. The Special Additional Terms (the "SAT") contained in this quote (if any) shall supplement the attached Terms and Conditions or previously executed agreement (collectively, the "Agreements"), provided, however that in the event of any conflict or inconsistency between the SAT and any of the Agreements, the SAT shall take precedence, govern and control. By accepting this quote, Client also agrees to any manufacturer terms applicable to the third party products and services purchased under this quote. Except as indicated otherwise, pricing does not include sales tax, VAT or shipping charges. To the extent taxes are included on the quote, these taxes are estimates and may vary from the taxes listed on the invoice, which shall take precedence. All shipping charges shall be invoiced separately following delivery. Acceptance may be emailed to AR@ahead.com.

Terms and Conditions: https://go.ahead.com/rs/833-BEW-758/images/Snap%20Terms%202021%20-%20%20Portrait%20%2802.01.21%20--%20Current%29.pdf

Authorized Signature: _____

Date: _____

Printed Name: _____

DocuSign Envelope ID: 3E8A19D7-AE23-4CE3-8A1F-378CF38EDF96

CONTRACT AMENDMENT # 2
RENEWAL # 2
REMAINING RENEWALS # 5

This amendment by and between the Supplier and State Entity defined below shall be effective as of the date this Amendment is fully executed. To the extent the contract requires the State Entity to issue a Notice of Award Amendment for purposes of exercising the renewal option, this written document shall serve as such Notice of Award Amendment.

STATE OF GEORGIA CONTRACT	
State Entity's Name:	Department of Administrative Services ("DOAS")
Supplier's Full Legal Name:	Dell Marketing LP.
Contract No.:	99999-001-SPD0000139-0001
Solicitation No./Event ID:	99999-SPD0000139
Solicitation Title/Event Name:	Enterprise Infrastructure
Contract Award Date:	11/09/2018
Current Contract Term:	11/09/2021 through 11/08/2022

WHEREAS, the Contract is in effect through the Current Contract Term as defined above; and

NOW THEREFORE, for good and valuable consideration, the receipt and sufficiency of which are hereby acknowledged, the parties do hereby agree as follows:

1. **CONTRACT RENEWAL.** The parties hereby agree that the contract will be renewed/extended for an additional period of time as follows:

NEW CONTRACT TERM	
Beginning Date of New Contract Term:	11/09/2022
End Date of New Contract Term:	11/08/2023

The parties agree the contract will expire at midnight on the date defined as the "End Date of the New Contract Term" unless the parties agree to renew/extend the contract for an additional period of time.

DocuSign Envelope ID: 3E8A19D7-AE23-4CE3-8A1F-378CF38EDF96

2. **SUCCESSORS AND ASSIGNS.** This Amendment shall be binding upon and inure to the benefit of the successors and permitted assigns of the parties hereto.

3. **ENTIRE AGREEMENT.** Except as expressly modified by this Amendment, the contract shall be and remain in full force and effect in accordance with its terms and shall constitute the legal, valid, binding and enforceable obligations to the parties. This Amendment and the contract (including any written amendments thereto), collectively, are the complete agreement of the parties and supersede any prior agreements or representations, whether oral or written, with respect thereto.

IN WITNESS WHEREOF, the parties have caused this Amendment to be duly executed by their authorized representatives.

CONTRACTOR

Contractor's Full Legal Name: (PLEASE TYPE OR PRINT)	Dell Marketing L.P.
Authorized Signature:	Carina Clifford
Printed Name and Title of Person Signing:	Carina Clifford, Contract Administrator
Date:	August 18, 2022
Company Address:	One Dell Way, Round Rock, TX 78682

STATE ENTITY

Authorized Signature:	Jim Barnaby
Printed Name and Title of Person Signing:	Jim Barnaby Deputy Commission – State Purchasing
Date:	9/14/2022
Company Address:	200 Piedmont Avenue, S.E. Suite 1308, West Tower Atlanta, Georgia 30334-9010

AGENDA ITEM

Other Business - County Attorney

REPORT TO: **Work Session (07/10/23)**

REPORT TO: **Voting Meeting (07/13/23)**

ITEM NO: 380/2023

SUBJECT: Approval and authorization for the Chairman to execute a resolution of the Board of Commissioners of Hall County calling for an election on the question whether or not to impose a Transportation Special Purpose Local Option Sales and Use Tax (TSPLOST), subject to Hall County voters' approval of a referendum on November 7, 2023, and authorization for the Chairman to take any and all additional action necessary to effectuate the Resolution, subject to review and approval by the County Attorney.

Meetings:

Work Session Date: 07/10/23

Voting Meeting Date: 07/13/23

Executive Summary:

Presenter: WL

Recommendation:
Approval

Purpose of Request:
Approval and authorization for the Chairman to execute a Resolution of the Board of Commissioners of Hall County calling for an election on the question whether or not to impose a Transportation Special Purpose Local Option Sales and Use Tax, subject to Hall County voters' approval of a referendum on November 7, 2023, and authorization for the Chairman to take any and all additional action necessary to effectuate the Resolution, subject to review and approval by the County Attorney.

History:

Hall County and its Municipalities have executed an Intergovernmental Agreement concerning the distribution of TSPLOST proceeds, and the Agreement authorizes a tax rate of one percent.

Facts and Issues:
Georgia law requires the Board of Commissioners to pass a Resolution calling for the imposition of a TSPLOST, subject to voter approval in a Referendum to be conducted on November 7, 2023. Following the Board's action, the Board of Elections must issue and publish the formal Call for the Referendum.

Options:

If a majority of Hall County voters approve the Referendum, the TSPLOST will be imposed, and the County and various Municipalities will be authorized to issue general obligation debt to fund various transportation projects.

Funding Requested	$ 0.00
Are funds within current budget?	No
Source of Funds	
Does the action involve a Resolution, Ordinance, Contract, Agreement, etc.?	Yes
Has it been reviewed by the County Attorney?	Yes
Is there a deadline for this item?	

Approvals:

Submit	Budget	Finance	Attorney
BC	TS	WG	VS
Administration		**Clerk**	
CR		JR	

Attachments:

Resolution
Exhibit A (TSPLOST IGA)
Exhibit B (Notice of Election)

HALL COUNTY BOARD OF COMMISSIONERS
FINANCIAL SUPPLEMENT REPORT

AGENDA ITEM 380/2023

Funds Requested: $ 0.00

Request Budgeted: No

Proposed Source of Funding:

Budget Transfer Requested: No

Funding Source Items:

Budget Transfer Items:

Additional Information/Comments:

Contact for Questions: WL

Phone: 770-297-2686

STATE OF GEORGIA
COUNTY OF HALL

A RESOLUTION OF THE BOARD OF COMMISSIONERS OF HALL COUNTY CALLING FOR AN ELECTION ON THE QUESTION WHETHER OR NOT TO IMPOSE A TRANSPORTATION SPECIAL PURPOSE LOCAL OPTION SALES AND USE TAX, SUBJECT TO HALL COUNTY VOTERS' APPROVAL OF A REFERENDUM ON NOVEMBER 7, 2023

WHEREAS, Hall County and its Municipalities constitute the regional hub for Northeast Georgia with regard to the provision of medical care, banking services, and commerce; and

WHEREAS, the location of Lake Lanier in Hall County has fueled exceptional tourism opportunities within Hall County and its Municipalities; and

WHEREAS, Interstate 985 traverses Hall County and has experienced an unprecedented increase in vehicle trips per day during the last decade, bringing residents from neighboring counties into Hall County and its Municipalities; and

WHEREAS, one of the main railroad lines in the nation traverses Hall County, and Hall County is partnering with the state and federal governments to create an inland port in Hall County along the railroad line; and

WHEREAS, the creation of the inland port will increase the transportation of goods, commodities, and materials through Hall County and its Municipalities; and

WHEREAS, numerous state routes provide connectivity among Hall County, its Municipalities, and major transportation corridors such as Interstate 85 and Georgia 400, and such transportation corridors provide direct access to the Interstate System serving the Southeastern United States; and

WHEREAS, Hall County and its Municipalities are experiencing rapid population growth as new residents determine that Hall County and its Municipalities provide outstanding opportunities to live, work, and play; and

WHEREAS, economic development activities within Hall County and its Municipalities are providing incentives for residents from neighboring counties to seek employment within Hall County and its Municipalities; and

WHEREAS, all of these factors have resulted in the need for Hall County and its Municipalities to explore alternatives to place before their residents regarding transportation improvements; and

WHEREAS, one such alternative is found in Article 5A of Chapter 8 of Title 48 of the Official Code of Georgia Annotated, as amended, which authorizes the imposition of a single county Transportation Special Purpose Local Option Sales and Use Tax (the "TSPLOST") to fund

authorized transportation purposes for the use and benefit of the County and qualified Municipalities within the County; and

WHEREAS, in accordance with Official Code of Georgia Annotated § 48-8-262(a)(l), the County and its Municipalities have determined that the majority of counties in the region have not proposed a Referendum on a regional special district transportation sales and use tax; and

WHEREAS, in accordance with Official Code of Georgia Annotated § 48-8-262(a)(2), the County and its Municipalities have determined that Hall County is not defined as a metropolitan county special district; and

WHEREAS, in accordance with Official Code of Georgia Annotated § 48-8-262(a)(3), the County and its Municipalities have determined that a tax is currently being levied and collected pursuant to Part 1 of Article 3 of Official Code of Georgia Chapter 48-8; and

WHEREAS, the governing authorities of the County and the Municipalities met together on April 25, 2023 to discuss possible Projects and Purposes for inclusion in a Transportation Special Purpose Local Option Sales and Use Tax referendum, and the proposed rate of the tax, in conformity with the requirements of Official Code of Georgia Annotated § 48-8-262(a)(2); and

WHEREAS, the County and its Municipalities have executed an Intergovernmental Agreement in order to place before the voters of Hall County the question whether a Transportation Special Purpose Local Option Sales and Use Tax should be utilized as a tool to help manage transportation challenges; and

WHEREAS, the Intergovernmental Agreement describes the transportation Projects and Purposes of Hall County and its Municipalities to be funded with the proceeds of the Transportation Special Purpose Local Option Sales and Use Tax; and

WHEREAS, Hall County has determined that the County should issue general obligation debt in the amount of up to $130,000,000 to fund some of the Projects and Purposes defined herein; and

WHEREAS, the Town of Braselton has determined that it should issue general obligation debt in the amount of up to $3,500,000 to fund some of the Projects and Purposes defined herein; and

WHEREAS, the City of Flowery Branch has determined that it should issue general obligation debt in the amount of up to $5,000,000 to fund some of the Projects and Purposes defined herein; and

WHEREAS, the City of Gainesville has determined that it should issue general obligation debt in the amount of up to $40,000,000 to fund some of the Projects and Purposes defined herein; and

WHEREAS, the City of Oakwood has determined that it should issue general obligation debt in the amount of up to $1,000,000 to fund some of the Projects and Purposes defined herein; and

WHEREAS, the Board of Commissioners of Hall County has determined that it is in the best interest of the citizens of Hall County that a Transportation Special Purpose Local Option Sales and Use Tax be imposed within a Special District co-extensive with Hall County to raise net proceeds of $325,000,000.00 for the purposes described in this Resolution; and

WHEREAS, pursuant to Georgia law, it is necessary to submit to the qualified voters of the Special District the question whether the Transportation Special Purpose Local Option Sales and Use Tax should be imposed for the purposes described in this Resolution, which question, if approved shall also constitute approval of the issuance of general obligation debt as described in this Resolution and in the ballot question;

NOW, THEREORE, THE BOARD OF COMMISSIONERS OF HALL COUNTY DOES HEREBY RESOLVE that, subject to the will of the voters of the Special District of Hall County in a referendum to be held on November 7, 2023, and in order to fund the transportation purposes and projects set forth in the Intergovernmental Agreement among Hall County and all of the Municipalities located wholly or partially within the geographic boundaries of the Special District of Hall County, a Transportation Special Purpose Local Option Sales and Use Tax in the amount of one percent (1%) on all sales and uses in the Special District of Hall County as provided by law is hereby authorized to be levied and collected within the Special District of Hall County as provided by Part 1 of Article 5A of Chapter 8 of Title 48 of the Official Code of Georgia Annotated, which contains Sections 48-8-260 through 48-8-269.6, as amended.

The proceeds of the tax shall be used only for the transportation Projects and Purposes set forth in the Intergovernmental Agreement attached hereto and in this Resolution. The proceeds of the tax may also be used to pay the general obligation debt that may be issued in conjunction with the imposition of the Transportation Special Purpose Local Option Sales and Use Tax. The transportation purposes to be funded by the tax for Hall County and all Municipalities located wholly or partially within Hall County, and the approximate cost of such transportation Purposes, are as follows:

TSPLOST Projects		
Description		Amount
Total Estimated Collections		**$ 325,000,000**
Purposes - Construction of roads, bridges, sidewalks, multiuse paths, intersection improvements, traffic safety enhancements, and stormwater projects pertaining to roadway and other transportation projects.		
Major Projects (80% bucket)		
Spout Springs Road Widening Phase II	County	$40,000,000
McEver Road Widening Phase I	County	58,000,000
Ridge Road Corridor Improvements	Gainesville	40,000,000
Park Hill Drive Intersection Improvements	Gainesville	11,000,000
Hilton Drive Extension	Gainesville	26,000,000
McEver Road Intersection Improvements	County	12,500,000
SR 365 Safety Improvements	County	20,000,000
SR 369/Browns Bridge Road Corridor Improvements/Widening	County	35,846,000
Little Five Points Intersection	County	2,500,000
Mt. Vernon Road and Rilla Road Intersection	County	3,000,000
Mt. Vernon Road and Jim Hood Road Intersection	County	2,500,000
Memorial Park Drive and Atlanta Highway Intersection	County	4,000,000
Old Oakwood Road at Balus Creek Road Culvert Replacement and Road Alignment	Oakwood	1,300,000
Main Street, Flat Creek Road and Old Oakwood Road Intersection Improvements	Oakwood	850,000
Frazer Road Corridor Improvements	Buford	1,504,000
Thompson Mill Road Improvements	Braselton	1,000,000
Total Estimated Cost Major Transportation Projects	**80%**	**$ 260,000,000**

Distribution to Jurisdictions, Local Projects (20% bucket)		
Purposes described by each jurisdiction below.		
Hall County Portion	**42.5000%**	**$27,625,000**
Municipality Portion	**57.5000%**	**$37,375,000**
Unincorporated Hall County	42.5000%	$27,625,000
Municipality Breakdown		
Braselton	3.9981%	$2,598,748
Flowery Branch	9.7953%	6,366,932
Gainesville	29.9856%	19,490,609
Buford	3.3984%	2,208,936
Gillsville	0.4998%	324,843
Clermont	1.3993%	909,562
Oakwood	5.3974%	3,508,310
Lula	2.9986%	1,949,061
Rest Haven	0.0277%	18,000
		$ 37,375,000
Total Estimated Distributions to Jurisdictions, Local Projects	**20%**	**$ 65,000,000**
Total Estimated Cost of TSPLOST Projects		**$ 325,000,000**

Hall County Project List

Project Name/Description	Estimated Project Cost
Construction of roads, bridges, sidewalks, multiuse paths, intersection improvements, traffic safety enhancements, and stormwater projects pertaining to roadway and other transportation projects.	
Projects may include: Hog Mountain Road corridor improvements/widening; improving sight distance issues at East Hall Road and Gaines Mill Road, and Hog Mountain and Blackjack Road; 2 foot paved shoulder widening with raised pavement markings and signage upgrades on Williams Road, County Line Road, Gaines Mill Road, Harmony Church Road, Blackjack Road, Bark Camp Road, and Hubert Stephens Road; intersection improvements at Old Cornelia Highway and Joe Chandler Road, Hog Mountain Road and Wade Orr Road, Hog Mountain Road and Capitola Farm Road, and Union Church Road and Elizabeth Lane; signage replacement/upgrades on Chestatee Road and Cool Springs Road; and other related projects.	$17,625,000
Resurfacing, including full depth reclamation, base and paving, culvert repair, traffic markers, patching, shoulder preparation, and related projects.	
Projects may include: resurfacing of approximately 25 miles of Hall County maintained roads based on the established annual road rating criteria and scoring system; and other related projects.	$10,000,000
Total Estimated Cost of Hall County Projects	**$27,625,000**

Municipalities Project List

Braselton

Project Name/Description	Estimated Project Cost
Construction of roads, bridges, sidewalks, multiuse paths, intersection improvements, traffic safety enhancements, and stormwater projects pertaining to roadway and other transportation projects.	$2,300,000
Projects may include: Highway 211, Highway 347, Thompson Mill Road, Spout Springs Road, Dunbar Road, and other related projects.	
Resurfacing, including full depth reclamation, base and paving, culvert repair, traffic markers, patching, shoulder preparation, and related projects.	$298,748
Projects may include: resurfacing of approximately 2 miles of Braselton maintained roads based on the established annual road rating criteria and scoring system; and other related projects.	
Total Estimated Cost of Braselton Projects	**$2,598,748**

Buford

Project Name/Description	Estimated Project Cost
Resurfacing, which may include full depth reclamation, base and paving, culvert repair, traffic markers, patching, sidewalks, shoulder preparation; construction of roads, stormwater projects pertaining to roadway and other transportation and related projects.	$2,208,936
Projects may include: McEver Road/Peachtree Industrial Blvd., Holiday Road, Carter Road, B.U. Bowman Drive, Golden Parkway, Bristol Industrial Way, BelleWood Court, Palmero Court, Lexie Lane, South Waterworks Road, Green Road, Cemetery Road, New Bethany Road, North Waterworks Road, Big Creek Road, Lee Drive, Shoreland Drive, Hutchins Drive, Blackberry Lane, Maple Avenue, Frazer Road and other related projects.	
Total Estimated Cost of Buford Projects	**$2,208,936**

Clermont

Project Name/Description	Estimated Project Cost
Construction of roads, sidewalks, and stormwater projects pertaining to roadway and other transportation projects	$710,000
Projects may include widening, repair and resurfacing of Oxford Road; sidewalk construction; stormwater projects on King Street and Main Street; and other projects.	
Resurfacing, patching and related projects.	$199,562
Projects may include the repair and resurfacing of various streets in the Town.	
Total Estimated Cost of Clermont Projects	**$909,562**

Flowery Branch

Project Name/Description	Estimated Project Cost
Construction of roads, bridges, sidewalks, multiuse paths, pedestrian upgrades (and related amenities), intersection improvements, turning lanes, traffic lights, traffic safety enhancements, and stormwater projects pertaining to roadway and other transportation projects.	$2,000,000
Projects may include: Intersections at Phil Niekro Blvd. – Mulberry Street, Radford Road – McEver Road, Radford Road – Atlanta Highway. Sidewalks – Phil Niekro Blvd., Mitchell Street, East Main Street, downtown streets, Capitola Farm Road.	
Resurfacing, including full depth reclamation, base and paving, culvert repair, traffic markers, patching, shoulder preparation, sidewalks, multiuse paths, pedestrian upgrades (and related amenities) and similar projects.	$4,366,932
Projects may include: Portions of Phil Niekro, Lake Crossing Blvd., Mitchell Street (Phase 2), East Main Street, downtown streets, Capitola Road.	
Total Estimated Cost of Flowery Branch Projects	**$6,366,932**

Gainesville

Project Name/Description	Estimated Project Cost
Construction of roads, bridges, sidewalks, multiuse paths, pedestrian upgrades (and related amenities), intersection improvements, turning lanes, traffic lights, traffic safety enhancements, and stormwater projects pertaining to roadway and other transportation projects.	
Projects may include: Memorial Park Drive, Old Flowery Branch Road, Green Hill Circle, West End Avenue, Green Street, Riverside Drive, Enota Drive, Beverly Road, M.L.K. Jr. Blvd., Pearl Nix Pkwy., Sky View Drive, Fullenwider Road, Athens Street, White Sulphur Road, Community Way, Spring Street, Atlanta Hwy., Shallowford Road, Gaines Mill Road, Smallwood Road, Aviation Blvd., Marler Street, Academy Street, East Ave., Limestone Pkwy., Old Cornelia Hwy., Park Hill Drive, Thompson Bridge Road, Browns Bridge Road, Jesse Jewell Pkwy.; and other similar projects.	$14,490,608
Resurfacing, including full depth reclamation, base and paving, culvert repair, traffic markers, patching, shoulder preparation, sidewalks, multiuse paths, pedestrian upgrades (and related amenities) and similar projects.	$5,000,000
Projects may include: resurfacing of approximately 20 miles of City of Gainesville maintained roads based on the established annual road rating criteria and scoring system; and other similar projects.	
Total Estimated Cost of Gainesville Projects	**$19,490,608**

Gillsville

Project Name/Description	Estimated Project Cost
Construction of roads, bridges, sidewalks, multiuse paths, pedestrian upgrades (and related amenities), intersection improvements, turning lanes, traffic lights, traffic safety enhancements, and stormwater projects pertaining to roadway and other transportation projects. Projects may include: Extension of Wilson Dr. Sidewalks from Downtown to the Park, New Parking Lot for Downtown Park	$210,000
Resurfacing, including full depth reclamation, base and paving, culvert repair, traffic markers, patching, shoulder preparation, sidewalks, multiuse paths, pedestrian upgrades (and related amenities) and similar projects. Projects may include -Resurface of Old Town Parking Lot & Driveway, Widening of Church St. and School St.	$114,843
Total Estimated Cost of Gillsville Projects	**$324, 843**

Lula

Lula Project Name/Description	Estimated Project Cost
Construction of roads, bridges, sidewalks, multiuse paths, intersection improvements, traffic safety enhancements, and stormwater projects pertaining to roadway and other transportation projects.	$349,061
Projects may include any of the 82 roads recognized as within the city and maintained by the city as prioritized by the City Council, and or other related projects.	
Resurfacing, including full depth reclamation, base and paving, culvert repair, traffic markers, patching, shoulder preparation, and related projects.	$1.600,000
Projects may include: resurfacing of approximately 4 miles of city maintained roads based on the established annual road rating criteria and scoring system; and other related projects.	
Total Estimated Cost of Lula Projects	**$1,949,061**

Oakwood

Project Name/Description	Estimated Project Cost
Construction of roads, bridges, sidewalks, multiuse paths, intersection improvements, traffic safety enhancements, and stormwater projects pertaining to roadway and other transportation projects.	
Projects may include: Installation of sidewalks, sidewalk improvements, sidewalk repair, including curb and gutter installation and repair, on Main Street, Railroad Street, Oakwood Road, Flat Creek Road, Bishops Lane, Fairfax Drive, Fullerton Drive, Rutledge Drive, Nellie Drive; Highlands to Islands Spur connections; Railroad Crossing safety improvements and intersection improvements at Railroad Street, Main Street, Walnut Circle; Intersection improvements at W. White and H. F. Reed Industrial Parkway; Oak Street widening and improvements; and other related projects.	$3,272,000
Resurfacing, including full depth reclamation, base and paving, culvert repair, traffic markers, patching, shoulder preparation, and related projects.	$236,310
Projects may include: Full depth reclamation of Nellie Drive, Culvert repair and replacement on annual projects list; and other related projects.	
Total Estimated Cost of Oakwood Projects	**$3,508,310**

Rest Haven

Project Name/Description	Estimated Project Cost
Resurfacing, which may include full depth reclamation, base and paving, culvert repair, traffic markers, patching, sidewalks, shoulder preparation; construction of roads, stormwater projects pertaining to roadway and other transportation and related projects.	$18,000
Projects may include: Thunder Road, Ledford Road.	
Total Estimated Cost of Rest Haven Projects	**$18,000**

The approximate cost of the transportation Purposes set forth in this Resolution is Three Hundred Twenty-Five Million Dollars ($325,000,000) which is the estimated net proceeds to be raised by the tax. Since the County and all Municipalities have entered into an Intergovernmental Agreement concerning the Purposes and Projects to be funded by the Transportation Special Purpose Local Option Sales and Use Tax pursuant to Official Code of Georgia Annotated Section 48-8-262(b), the maximum amount of net proceeds to be raised by the tax shall correspond to the period of time the tax shall be imposed as set forth in subparagraph (C) of Official Code of Georgia Annotated Section 48-8-262(d)(2). A copy of the fully-executed Intergovernmental Agreement among Hall County and all Municipalities is attached hereto as Exhibit A and is by this reference made a part hereof.

The maximum period of time for which the tax shall be imposed is five calendar years beginning on April 1, 2024, if approved by the voters of the Special District of Hall County. The rate of the tax shall be one percent (1%).

The ballot question with regard to whether the tax should be approved by the electors of the Special District shall be in substantially the following form:

"( ) Yes
( ) No

Shall a special one percent sales and use tax be imposed in the special district consisting of Hall County for a period of time not to exceed five years and for the raising of an estimated amount of $325,000,000 for transportation purposes?

If imposition of the tax is approved by the voters, such vote shall also constitute approval of the issuance of general obligation debt of Hall County in the principal amount of $130,000,000 for the above purpose.

If imposition of the tax is approved by the voters, such vote shall also constitute approval of the issuance of general obligation debt of the Town of Braselton in the principal amount of $3,500,000 for the above purpose.

If imposition of the tax is approved by the voters, such vote shall also constitute approval of the issuance of general obligation debt of the City of Flowery Branch in the principal amount of $5,000,000 for the above purpose.

If imposition of the tax is approved by the voters, such vote shall also constitute approval of the issuance of general obligation debt of the City of Gainesville in the principal amount of $40,000,000 for the above purpose.

If imposition of the tax is approved by the voters, such vote shall also constitute approval of the issuance of general obligation debt of the City of Oakwood in the principal amount of $1,000,000 for the above purpose."

The question regarding approval of the Transportation Special Purpose Local Option Sales and Use Tax shall be placed on the next scheduled election allowed by law, November 7, 2023. The Board of Commissioners hereby notifies the Election Superintendent of Hall County of the call of this Referendum and directs the County Clerk to hand deliver a copy of this Resolution to the Chairman of the Board of Elections and Registration of Hall County and the Elections Director of Hall County as soon as possible following the approval and execution of this Resolution.

The County Clerk shall maintain the list of transportation Purposes set forth herein, or a digest thereof, in her office for public inspection during the regular business hours of the County Clerk.

The Board of Commissioners further authorizes Hall County's issuance of general obligation debt in an amount up to $130,000,000 as set forth in the Intergovernmental Agreement and this Resolution. The Board of Commissioners further notes the possible issuance of debt by Braselton, Flowery Branch, Gainesville, and Oakwood as contemplated by Official Code of Georgia Annotated Section 48-8-263 and as set forth in the Intergovernmental Agreement.

The Board of Commissioners requests that the Election Superintendent join in the call of this Referendum for the purpose of submitting to the qualified voters of Hall County the question set forth herein. The Board of Commissioners requests that the Board of Elections conduct the election in the manner authorized by general law. The Board further requests that the Election Superintendent certify the result of the Referendum to the Secretary of State and the State Revenue Commissioner. It is the intent of the Board of Commissioners that this Referendum be conducted in all respects in accordance with the State Elections Code and the provisions of Official Code of Georgia Annotated found in Article 5A of Chapter 48-8.

The Board of Commissioners hereby authorizes and requests that the Board of Elections and Registration of Hall County publish the requisite notice of election in the newspaper in which Sheriff's advertisements are published in Hall County as required by law. The notice of election shall be in substantially the form set forth in Exhibit B which is attached hereto and by this reference made a part hereof. The Board of Commissioners requests that the Board of Elections issue the call for an election at least 90 days prior to the date of the election.

The Board of Commissioners hereby ratifies and approves the Intergovernmental Agreement among the County and its Municipalities in substantially the form attached to this Resolution.

The Board of Commissioners hereby authorizes the County Administrator or his designee to take any and all further actions necessary or proper in connection with the imposition of the Transportation Special Purpose Local Option Sales and Use Tax and the authorization of Hall County debt pursuant to this Resolution and the Intergovernmental Agreement attached hereto.

This Resolution shall become effective immediately upon its adoption.

(Signatures on the following page.)

HALL COUNTY, GEORGIA

By: _____
Richard P. Higgins
Chairman, Board of Commissioners

Attest:

_____ _____ (SEAL)
Jennifer Rivera, Clerk Date

Approved as to Form:

_____
William J. Linkous, III, County Attorney

STATE OF GEORGIA
COUNTY OF HALL

TRANSPORTATION SPECIAL PURPOSE LOCAL OPTION SALES TAX INTERGOVERNMENTAL AGREEMENT

This Intergovernmental Agreement (the "Agreement") is made this _____ day of July, 2023 by and among Hall County, Georgia (hereinafter the "County"), a political subdivision of the State of Georgia, the Town of Braselton, Georgia, a municipal corporation, the City of Buford, Georgia, a municipal corporation, the Town of Clermont, Georgia, a municipal corporation, the City of Flowery Branch, Georgia, a municipal corporation, the City of Gainesville, Georgia, a municipal corporation, the City of Gillsville, Georgia, a municipal corporation, the City of Lula, Georgia, a municipal corporation, the City of Oakwood, Georgia, a municipal corporation, and the City of Rest Haven, a municipal corporation (hereinafter the "Municipalities"), acting pursuant to validly adopted approvals by their respective governing bodies. The County and the Municipalities do hereby agree as follows:

WITNESSETH:

WHEREAS, Hall County and its Municipalities constitute the regional hub for Northeast Georgia with regard to the provision of medical care, banking services, and commerce; and

WHEREAS, the location of Lake Lanier in Hall County has fueled exceptional tourism opportunities within Hall County and its Municipalities; and

WHEREAS, Interstate 985 traverses Hall County and has experienced an unprecedented increase in vehicle trips per day during the last decade, bringing residents from neighboring counties into Hall County and its Municipalities; and

WHEREAS, one of the main railroad lines in the nation traverses Hall County, and Hall County is partnering with the state and federal governments to create an inland port in Hall County along the railroad line; and

WHEREAS, the creation of the inland port will increase the transportation of goods, commodities, and materials through Hall County and its Municipalities; and

WHEREAS, numerous state routes provide connectivity among Hall County, its Municipalities, and major transportation corridors such as Interstate 85 and Georgia 400, and such transportation corridors provide direct access to the Interstate System serving the Southeastern United States; and

WHEREAS, Hall County and its Municipalities are experiencing rapid population growth as new residents determine that Hall County and its Municipalities provide outstanding opportunities to live, work, and play; and

WHEREAS, economic development activities within Hall County and its Municipalities are providing incentives for residents from neighboring counties to seek employment within Hall

County and its Municipalities; and

WHEREAS, all of these factors have resulted in the need for Hall County and its Municipalities to explore alternatives to place before their residents regarding transportation improvements; and

WHEREAS, one such alternative is found in Article 5A of Chapter 8 of Title 48 of the Official Code of Georgia Annotated, as amended (the "Act"), which authorizes the imposition of a single county Transportation Special Purpose Local Option Sales and Use Tax (the "TSPLOST") to fund authorized transportation Purposes for the use and benefit of the County and qualified Municipalities within the County; and

WHEREAS, in accordance with Official Code of Georgia Annotated § 48-8-262(a)(l), the County and its Municipalities have determined that the majority of counties in the region have not proposed a referendum on a regional special district transportation sales and use tax; and

WHEREAS, the governing authorities of the County and the Municipalities met together on April 25, 2023 to discuss possible projects and purposes for inclusion in the Transportation Special Purpose Local Option Sales and Use Tax referendum in conformity with the requirements of Official Code of Georgia Annotated § 48-8-262(a)(2); and

WHEREAS, the County and its Municipalities desire to execute an Intergovernmental Agreement in order to place before the voters of Hall County the question whether a Transportation Special Purpose Local Option Sales and Use Tax should be utilized as a tool to help manage transportation challenges; and

WHEREAS, Hall County proposes to issue general obligation debt in the amount of up to $130,000,000 (One Hundred Thirty Million Dollars) to fund some of the Projects and Purposes defined herein; and

WHEREAS, the Town of Braselton proposes to issue general obligation debt in the amount of up to $3,500,000 (Three Million Five Hundred Thousand Dollars) to fund some of the Projects and Purposes defined herein; and

WHEREAS, the City of Flowery Branch proposes to issue general obligation debt in the amount of up to $5,000,000 (Five Million Dollars) to fund some of the Projects and Purposes defined herein; and

WHEREAS, the City of Gainesville proposes to issue general obligation debt in the amount of up to $40,000,000 (Forty Million Dollars) to fund some of the Projects and Purposes defined herein; and

WHEREAS, the City of Oakwood proposes to issue general obligation debt in the amount of up to $1,000,000 (One Million Dollars) to fund some of the Projects and Purposes defined herein;

NOW THEREFORE, in consideration of the premises and undertakings hereinafter set forth, it is agreed by and among the County and the Municipalities as follows:

Section 1. Representations of the Parties.

Each party hereto makes the following representations and warranties which are specifically relied upon by all other parties as a basis for entering into this Agreement:

A. The County agrees that it will take all actions necessary to call an election, to be held in all of the voting precincts in Hall County on November 7, 2023, for the purpose of submitting to the qualified voters of the County for their approval the question of whether or not a Transportation Special Purpose Local Option Sales and Use Tax of one percent shall be imposed on all sales and uses subject to the sales and use tax in the special district of Hall County, as authorized by the Act for five years (20 calendar quarters) commencing on April 1, 2024 for the purpose of funding specified Projects (hereinafter more fully referred to and defined), and whether or not the County, Braselton, Flowery Branch, Gainesville, and Oakwood shall be authorized to issue general obligation debt to finance certain of the Projects and Purposes. The amount of net proceeds to be raised by the Transportation Special Purpose Local Option Sales and Use Tax is estimated to be $325,000,000 (Three Hundred and Twenty-Five Million Dollars).

B. The Municipalities are legally chartered municipal corporations as defined by law and judicial interpretation. During a public meeting of its governing board, conducted in compliance with the Open Meetings Act, Official Code of Georgia Annotated § 50-14-1, et seq., each of the Municipalities validly approved the execution of this Agreement.

C. The County is a political subdivision of the State of Georgia created and existing under the Constitution and laws of the State. During a public meeting conducted in compliance with the Open Meetings Act, Official Code of Georgia Annotated § 50-14-1, et seq., the County approved the execution of this Agreement.

D. It is the intention of the County and the Municipalities to comply in all respects with Official Code of Georgia Annotated § 48-8-260 et seq., and all provisions of this Agreement shall be construed in light of Official Code of Georgia Annotated § 48-8-260, et seq.

Section 2. Conditions Precedent.

The obligations of all parties under this Agreement are contingent upon the following prior events:

A. The adoption of a Resolution by the Board of Commissioners of Hall County authorizing the imposition of the Transportation Special Purpose Local Option Sales and Use Tax and calling the necessary election in accordance with the provisions of Official Code of Georgia Annotated § 48-8-262(d).

B. The approval of the Transportation Special Purpose Local Option Sales and Use Tax by a majority of the voters in the County voting in the election (for those purposes) to be held in accordance with the provisions of Official Code of Georgia Annotated § 48-8-263.

C. This Agreement is further contingent upon the collection of Transportation Special Purpose Local Option Sales and Use Tax revenues by the State of Georgia Department of Revenue and its transfer of the same to the County.

Section 3. Rate of Tax: Estimated Amount; Effective Date and Term of the Tax.

The Transportation Special Purpose Local Option Sales and Use Tax, subject to approval in an election to be held on November 7, 2023, shall be imposed at the rate of one percent (1%). The total estimated dollar amount for the net proceeds of the tax is $325,000,000 (Three Hundred and Twenty-Five Million Dollars). The maximum period of time for which the tax shall be imposed is five years, beginning on April 1, 2024. The maximum amount of net proceeds to be raised by the Transportation Special Purpose Local Option Sales and Use Tax shall correspond to the period of time that the Transportation Special Purpose Local Option Sales and Use Tax shall be imposed. Hall County and its Municipalities intend for the maximum amount of net proceeds to be raised by the Transportation Special Purpose Local Option Sales and Use Tax to be the maximum amount of net proceeds allowed by law, specifically in accordance with House Bill 934 which became effective on May 2, 2022.

Section 4. Effective Date and Term of This Agreement.

This Agreement shall commence upon the date of its execution by Hall County and all Municipalities and shall terminate upon the latter of:

A. The official declaration by the Board of Elections and Registration of Hall County of the failure of the election described in this Agreement; or

B. The expenditure by the County and the Municipalities of the last dollar of money collected from the Transportation Special Purpose Local Option Sales and Use Tax even if such expenditure is made after the expiration of the Transportation Special Purpose Local Option Sales and Use Tax collection period.

Section 5. Purposes and Projects, Priority and Order of Funding.

A. In recognition of the need for transportation improvements across Hall County and its Municipalities, the parties agree that the estimated total net proceeds ($325,000,000) shall be utilized for the following transportation purposes (the "Purposes"): roads, streets, bridges, including without limitation road, street, and bridge purposes pursuant to paragraph (1) of subsection (b) of Official Code of Georgia Annotated Section 48-8-121, trails, roundabouts, sidewalks, traffic signals, including new general obligation debt and other multi-year obligations issued to finance such purposes, and all accompanying infrastructure and services necessary to provide access to these transportation facilities.

B. The transportation Projects to be funded in whole or in part from Transportation Special Purpose Local Option Sales and Use Tax proceeds (the "Projects"), are listed in Exhibit A, which is attached hereto and made part of this Agreement. The parties acknowledge and agree that at least 30% of the estimated revenues are being expended on Projects that are consistent with the Statewide Strategic Transportation Plan as defined in Official Code of Georgia Annotated § 32-2-22.

C. All transportation Purposes included in this Agreement shall be funded from proceeds from the tax except as otherwise agreed. The Projects and Purposes described herein shall be funded from Transportation Special Purpose Local Option Sales and Use Tax proceeds as provided in this Agreement, and as specified in Exhibit A. Each party shall have the sole discretion to reduce the scope of a Project in the event of a funding shortfall.

Section 6. Transportation Special Purpose Local Option Sales and Use Tax Funds; Separate Accounts; No Commingling.

A. A special fund or account shall be created by the County and designated as the 2024 Hall County Special District Mass Transportation Special Purpose Local Option Sales and Use Tax Fund (the "County Transportation Special Purpose Local Option Sales and Use Tax Fund"). The County shall select a bank which shall act as a depository and custodian of the County Transportation Special Purpose Local Option Sales and Use Tax Fund upon such terms and conditions as may be acceptable to the County.

B. Each Municipality shall create a special fund to be designated as the 2024 [Municipality name] Special District Mass Transportation Special Purpose Local Option Sales and Use Tax Fund (each a "Municipal Transportation Special Purpose Local Option Sales and Use Tax Fund"). Each Municipality shall select a bank which shall act as a depository and custodian of the Transportation Special Purpose Local Option Sales and Use Tax proceeds received by each Municipality upon such terms and conditions as may be acceptable to the Municipality.

C. All Transportation Special Purpose Local Option Sales and Use Tax proceeds shall be maintained by the County and each Municipality in the separate accounts or funds established pursuant to this Section. Transportation Special Purpose Local Option Sales and Use Tax proceeds shall not be commingled with other funds of the County or the Municipalities and shall be used exclusively for the purposes detailed in this Agreement. No funds other than Transportation Special Purpose Local Option Sales and Use Tax proceeds shall be placed in such accounts.

Section 7. Allocation and Disbursement of Transportation Special Purpose Local Option Sales and Use Tax Proceeds.

A. Upon receipt by the County of Transportation Special Purpose Local Option Sales and Use Tax proceeds collected by the State Department of Revenue, the County shall immediately deposit said proceeds in the Transportation Special Purpose Local Option Sales and Use Tax Fund. The monies in the Transportation Special Purpose Local Option Sales and Use

Tax Fund shall be held and applied to the cost of acquiring, constructing and installing the Projects that have been designated as Major Projects by the County and all Municipalities (hereinafter the "Major Projects") and the County capital outlay projects listed in Exhibit A and as provided in Paragraph B of this Section. In the event that a Major Project is specifically designated herein to be administered by a specific Municipality, the County shall, within 30 days of receipt of funds from the State Revenue Commissioner, transfer the funds designated for such Major Project to the designated Municipality on a pro-rata basis with Major Projects to be administered by the County and other specifically designated Municipalities according to the amount of proceeds received each month for Major Projects. The following Major Projects have been specifically designated in Exhibit A to be administered by specific Municipalities:

Ridge Road Corridor Improvements – Administered by the City of Gainesville

Park Hill Drive Intersection Improvements – Administered by the City of Gainesville

Hilton Drive Extension – Administered by the City of Gainesville

Old Oakwood Road at Balus Creek Road Culvert Replacement and Road Alignment) – Administered by the City of Oakwood

Main Street, Flat Creek and Old Oakwood Road Intersection – Administered by the City of Oakwood

Frazer Road Corridor Improvements – Administered by the City of Buford

Thompson Mill Road Improvements – Administered by the Town of Braselton

B. The County, following each monthly deposit of the Transportation Special Purpose Local Option Sales and Use Tax proceeds in the Transportation Special Purpose Local Option Sales and Use Tax Fund, shall reserve $4,333,333.33 (Four Million Three Hundred Thirty-Three Thousand Three Hundred Thirty-Three and 33/100 Dollars) of the monthly Transportation Special Purpose Local Option Sales and Use Tax proceeds received to pay the cost of the Major Projects to be administered by the County or specifically designated Municipalities as set forth in Exhibit A to this Agreement on a pro rata basis determined by the percentage of the individual Project as a portion of Major Projects. For example, the percentage of the Project known as the Thompson Mill Road Improvements is 0.38 percent compared to the total Major Projects List, as shown on Exhibit A, so each month Hall County would disburse the sum of $16,666.67 to the Town of Braselton from the Major Projects reserve to facilitate the Town of Braselton's administration of the construction of the Thompson Mill Road Improvements Project, assuming that at least $4,333,333.33 is received as TSPLOST proceeds from the State Revenue Commissioner for that month. If at least $4,333,333.33 is not received for the month, then the distribution by Hall County to the Town of Braselton for that month would be 0.38 percent of the funds received by Hall County from the State Revenue Commissioner for that month. Additionally, if the net proceeds from the Transportation Special Purpose Local Option

Sales Tax exceed the sum of $4,333,333.33 for the month, the County shall disburse to each Municipality its pro-rata allocation of the remaining monthly Transportation Special Purpose Local Option Sales and Use Tax net proceeds received, within thirty (30) days of the County's receipt of such Transportation Special Purpose Local Option Sales and Use Tax proceeds. The County or the specifically designated Municipality shall expend the monies reserved for Major Projects to construct and install such Major Projects. The County and the Municipalities shall receive a pro-rata allocation of the remaining Transportation Special Purpose Local Option Sales and Use Tax net proceeds, after the allocation for the Major Projects, on a monthly basis in accordance with the table below. The aggregate net remaining Transportation Special Purpose Local Option Sales and Use Tax proceeds are estimated to be $65,000,000 (Sixty-Five Million Dollars) over the five (5) year period.

Project	County/Municipality	Pro Rata %	Estimated Cost
County Projects (excluding Major Projects)	Unincorporated Hall County	42.5000%	27,625,000
Braselton	Braselton	3.9981%	2,598,748
Flowery Branch	Flowery Branch	9.7953%	6,366,932
Gainesville	Gainesville	29.9856%	19,490,608
Buford	Buford	3.3984%	2,208,936
Gillsville	Gillsville	0.4998%	324,843
Clermont	Clermont	1.3993%	909,562
Oakwood	Oakwood	5.3974%	3,508,310
Lula	Lula	2.9986%	1,949,061
Rest Haven	Rest Haven	0.0277%	18,000
			$65,000,000

Notwithstanding the foregoing, once the County has deposited the aggregate amount of $260,000,000 (Two Hundred Sixty Million Dollars) (the total estimated cost of the Major Projects) into the account for the payment of the cost of the Major Projects, the County shall make no further deposits of Transportation Special Purpose Local Option Sales and Use Tax proceeds into such account for Major Projects. As among the Major Projects, the County, or the applicable specifically designated Municipality, may allocate excess proceeds not needed for a particular Major Project, once satisfactorily completed, to one or more other Major Projects as determined by the County, or with regard to Major Projects to be administered by a specifically designated Municipality, the specifically designated Municipality may allocate excess proceeds for such Major Project administered by such Municipality to other Major Projects administered by such Municipality or to Major Projects administered by the County. In the event that the final, actual aggregate cost of the Major Projects is less than $260,000,000, any excess proceeds designated for Major Projects shall be disbursed in the same manner as the remaining Transportation Special Purpose Local Option Sales and Use Tax proceeds are to be disbursed as set forth in the table above.

Proceeds over and above the amount estimated to be received pursuant to this Referendum (herein, "Excess Proceeds") shall be allocated in accordance with the table above and shall be used

solely for the Purposes listed herein. Each party shall expend its portion (determined using the percentages set forth in the table above) of Excess Proceeds from the Transportation Special Purpose Local Option Sales and Use Tax on one or more of its Projects set forth in Exhibit A of this Agreement.

C. No Purpose or Project will be given preference in the funding and distribution process in such a way that the monthly distribution formula set forth herein is affected. Each party to this Agreement shall determine the priority or order in which its designated transportation purposes will be fully or partially funded based upon the distribution formula set forth in this Agreement. Each party's determination of the priority or order of funding for its transportation purposes shall be based on the extent to which a Project is ready to be initiated, the most recently updated assessment of the transportation needs of the applicable party, and practical considerations regarding the effect of the Project upon the traffic flow within the jurisdiction. The parties anticipate that projects may be funded concurrently so as to maximize the impact of the Transportation Special Purpose Local Option Sales and Use Tax proceeds on the transportation needs of Hall County and its Municipalities.

D. Should any Municipality cease to exist as a legal entity before all funds are distributed under this Agreement, that Municipality's share of the funds subsequent to dissolution shall be paid to the County as part of the County's share, unless an act of the Georgia General Assembly makes the defunct Municipality part of another successor municipality. If such an act is passed, the defunct Municipality's share shall be paid to the successor Municipality in addition to all other funds to which the successor Municipality would otherwise be entitled.

Section 8. Project Monitoring, Record Keeping and Reporting, Audits.

A. All parties to this Agreement shall promptly move forward with the acquisition and construction of the Projects in an efficient and economical manner and at a reasonable cost in conformity with all applicable laws, ordinances, rules and regulations of any governmental authority having jurisdiction over the Projects.

B. The governing authority of the County and the governing authority of each of the Municipalities shall comply with the requirements of Official Code of Georgia Annotated § 48-8-269.5(a)(2), which requires that the governing authority of each county and the governing authority of each qualified municipality receiving any proceeds from the tax under this part to maintain a record of each and every purpose for which the proceeds of the tax are used. A schedule shall be included in each annual audit which shows for each purpose in the resolution calling for imposition of the tax the original estimated cost, the current estimated cost if it is not the original estimated cost, amounts expended in prior years, and amounts expended in the current year. The auditor shall verify and test expenditures sufficient to provide assurances that the schedule is fairly presented in relation to the financial statements. The auditor's report on the financial statements shall include an opinion, or disclaimer of opinion, as to whether the schedule is presented fairly in all material respects in relation to the financial statements taken as a whole. Certain information must be included in the annual audit of the County or each of the

Municipalities during the term of this Agreement. The distribution and use of all Transportation Special Purpose Local Option Sales and Use Tax proceeds deposited in the County Transportation Special Purpose Local Option Sales and Use Tax Fund and each Municipal Transportation Special Purpose Local Option Sales and Use Tax Fund shall be audited annually by an independent certified public accounting firm. The County and the Municipalities agree to cooperate with the independent certified public accounting firm in any audit by providing all necessary information. Each Municipality shall provide the County a copy of its annual audit.

C. The governing authority of the County and the governing authority of each of the Municipalities shall comply with the requirements of Official Code of Georgia Annotated § 48-8-269.6, which requires the publication of annual reports concerning expenditures for the Purposes.

D. The County and Municipalities agree to maintain thorough and accurate records concerning receipt of Transportation Special Purpose Local Option Sales and Use Tax proceeds and expenditures for each Project or Purpose undertaken by the County or respective Municipality as required to fulfill the terms of this Agreement.

Section 9. Completion of Projects.

A. The County and the Municipalities acknowledge that the costs shown for each Purpose described in Exhibit A are estimated amounts.

B. When the County or a Municipality, as applicable, confirms that all of its Projects are completed, any excess proceeds held by the confirming County or Municipality shall, for the purposes of this Agreement, be deemed excess funds and disposed of as follows: Excess Proceeds subject to this subsection shall be used solely for the purpose of reducing any indebtedness of the County or the applicable qualified Municipality within the special district other than indebtedness incurred pursuant to this part. If there is no such other indebtedness or if the Excess Proceeds exceed the amount of any such other indebtedness, then the Excess Proceeds shall next be paid into the general fund of such County or the applicable qualified Municipality, it being the intent that any funds so paid into the general fund of such County or applicable qualified Municipality be used for the purpose of reducing ad valorem taxes according to Official Code of Georgia Annotated § 48- 8-269.5(f)(2).

Section 10. Project Management.

The County, or the applicable Municipality for municipal projects to be administered by such Municipality, may contract for Project Management regarding its Major Projects, and Project Management shall be funded from Transportation Special Purpose Local Option Sales and Use Tax proceeds. Project Management shall be performed by one or more persons or entities, and the Project Management function shall work out of the Gainesville-Hall Metropolitan Planning Organization (hereinafter "MPO") office structure. The total annual compensation for the Project Management function described in this paragraph, including wages and benefits, if applicable,

shall not exceed $300,000 (Three Hundred Thousand Dollars). Municipalities may request that the Project Management function described in this paragraph be used for certain Municipal Projects which are not designated as Major Projects. In such event, the Municipality shall contract with the Project Management person or entity described in this paragraph for the specific services to be performed.

Section 11. Issuance of Debt by County and/or Municipalities.

County Debt.

A. The Transportation Special Purpose Local Option Sales and Use Tax election ballot shall contain language required by the Act for the authorization of general obligation County debt in the principal amount of up to $130,000,000 (One Hundred Thirty Million Dollars).

B. The County may use the proceeds of its debt for the purpose of funding Major Projects or County Projects, paying capitalized interest (if any), and paying the cost of issuing its debt. The County acknowledges that it is solely responsible for the payment of its debt, including any and all costs, interest, and fees associated therewith.

C. The County's debt shall be paid first from the proceeds of its portion of the Transportation Special Purpose Local Option Sales and Use Tax or from the proceeds of the Transportation Special Purpose Local Option Sales and Use Tax which have been designated for Major Projects, with the exception of Major Projects which are designated in this Agreement to be administered by a specifically designated Municipality. In the event that there are insufficient Transportation Special Purpose Local Option Sales and Use Tax collections to pay the debt from its portion of the proceeds, the County shall pay any shortfall attributable to the debt from its general funds (the "Debt Service Payments"). The County covenants that, in order to make the Debt Service Payments when due from its general funds to the extent required, it will exercise its power of taxation to the extent necessary to timely pay any amounts required to be paid hereunder and it will make available and use for such payments all taxes levied and collected for that purpose together with funds from any other source. The County further covenants and agrees that in order to make funds available for such purpose, it will, in its general revenue, appropriation, and budgetary measures whereby its tax funds or revenues and the allocation thereof are controlled or provided for, include sums sufficient to timely satisfy such Debt Service Payments that may be required to be made from its general funds, whether or not any other sums are included in such measure, until all payments so required to be made shall have been made in full. The obligation of the County to make any payments that may be required to be made from its general funds shall constitute a general obligation of the County and a pledge of full faith and credit of the County to provide the funds required to timely fulfill any such obligation.

D. The obligation of the County to make Debt Service Payments and to perform and observe the other agreements on its part contained in this Section 11 shall be absolute and unconditional. Until such time as the principal of and interest on the debt shall have been paid in full or provision for the payment thereof shall have been made, the County (a) will

not suspend or discontinue any payments provided for herein, (b) will perform and observe all of its other agreements contained in this Agreement, and (c) will not terminate this Agreement for any cause, including, without limiting the generality of the foregoing, failure to complete any Project, a defect in any Project, or any failure of any other party to this Agreement to observe, whether express or implied, any duty, liability or obligation arising out of or connected with this Agreement.

E. The County will be responsible for all facets of the debt issuance and repayment process for its debt as stated herein. The County will select the underwriter, bond counsel and local counsel. The County will endeavor in good faith to be fiscally responsible in minimizing, to the extent possible, the costs and fees associated with the debt issuance process.

Braselton Debt.

F. The Transportation Special Purpose Local Option Sales and Use Tax election ballot shall contain language required by the Act for the authorization of general obligation Braselton debt in the principal amount of up to $3,500,000 (Three Million Five Hundred Thousand Dollars).

G. Braselton may use the proceeds of its debt for the purpose of funding Major Projects or Braselton Projects, paying capitalized interest (if any), and paying the cost of issuing its debt. Braselton acknowledges that it is solely responsible for the payment of its debt, including any and all costs, interest, and fees associated therewith.

H. Braselton's debt shall be paid first from the proceeds of its portion of the Transportation Special Purpose Local Option Sales and Use Tax or from the proceeds of the Transportation Special Purpose Local Option Sales and Use Tax which have been designated for Major Projects for which Braselton has been specifically designated as administrator within this Agreement. In the event that there are insufficient Transportation Special Purpose Local Option Sales and Use Tax collections to pay the debt from its portion of the proceeds, Braselton shall pay any shortfall attributable to the debt from its general funds (the "Debt Service Payments"). Braselton covenants that, in order to make the Debt Service Payments when due from its general funds to the extent required, it will exercise its power of taxation to the extent necessary to timely pay any amounts required to be paid hereunder and it will make available and use for such payments all taxes levied and collected for that purpose together with funds from any other source. Braselton further covenants and agrees that in order to make funds available for such purpose, it will, in its general revenue, appropriation, and budgetary measures whereby its tax funds or revenues and the allocation thereof are controlled or provided for, include sums sufficient to timely satisfy such Debt Service Payments that may be required to be made from its general funds, whether or not any other sums are included in such measure, until all payments so required to be made shall have been made in full. The obligation of Braselton to make any payments that may be required to be made from its general funds shall constitute a general obligation of Braselton and a pledge of full faith and credit of Braselton to provide the funds required to timely fulfill any such obligation.

I. The obligation of Braselton to make Debt Service Payments and to perform and observe the other agreements on its part contained in this Section 11 shall be absolute and unconditional. Until such time as the principal of and interest on the debt shall have been paid in full or provision for the payment thereof shall have been made, Braselton (a) will not suspend or discontinue any payments provided for herein, (b) will perform and observe all of its other agreements contained in this Agreement, and (c) will not terminate this Agreement for any cause, including, without limiting the generality of the foregoing, failure to complete any Project, a defect in any Project, or any failure of any other party to this Agreement to observe, whether express or implied, any duty, liability or obligation arising out of or connected with this Agreement.

J. Braselton will be responsible for all facets of the debt issuance and repayment process for its debt as stated herein. Braselton will select the underwriter, bond counsel and local counsel. Braselton will endeavor in good faith to be fiscally responsible in minimizing, to the extent possible, the costs and fees associated with the debt issuance process.

Flowery Branch Debt.

K. The Transportation Special Purpose Local Option Sales and Use Tax election ballot shall contain language required by the Act for the authorization of general obligation Flowery Branch debt in the principal amount of up to $5,000,000 (Five Million Dollars).

L. Flowery Branch may use the proceeds of its debt for the purpose of funding Flowery Branch Projects, paying capitalized interest (if any), and paying the cost of issuing its debt. Flowery Branch acknowledges that it is solely responsible for the payment of its debt, including any and all costs, interest, and fees associated therewith.

M. Flowery Branch's debt shall be paid first from the proceeds of its portion of the Transportation Special Purpose Local Option Sales and Use Tax. In the event that there are insufficient Transportation Special Purpose Local Option Sales and Use Tax collections to pay the debt from its portion of the proceeds, Flowery Branch shall pay any shortfall attributable to the debt from its general funds (the "Debt Service Payments"). Flowery Branch covenants that, in order to make the Debt Service Payments when due from its general funds to the extent required, it will exercise its power of taxation to the extent necessary to timely pay any amounts required to be paid hereunder and it will make available and use for such payments all taxes levied and collected for that purpose together with funds from any other source. Flowery Branch further covenants and agrees that in order to make funds available for such purpose, it will, in its general revenue, appropriation, and budgetary measures whereby its tax funds or revenues and the allocation thereof are controlled or provided for, include sums sufficient to timely satisfy such Debt Service Payments that may be required to be made from its general funds, whether or not any other sums are included in such measure, until all payments so required to be made shall have been made in full. The obligation of Flowery Branch to make any payments that may be required to be made from its general funds shall constitute a general obligation of Flowery Branch and a pledge of full faith and credit of Flowery Branch to provide the funds required to timely fulfill any such obligation.

N. The obligation of Flowery Branch to make Debt Service Payments and to perform and observe the other agreements on its part contained in this Section 11 shall be absolute and unconditional. Until such time as the principal of and interest on the debt shall have been paid in full or provision for the payment thereof shall have been made, Flowery Branch (a) will not suspend or discontinue any payments provided for herein, (b) will perform and observe all of its other agreements contained in this Agreement, and (c) will not terminate this Agreement for any cause, including, without limiting the generality of the foregoing, failure to complete any Project, a defect in any Project, or any failure of any other party to this Agreement to observe, whether express or implied, any duty, liability or obligation arising out of or connected with this Agreement.

O. Flowery Branch will be responsible for all facets of the debt issuance and repayment process for its debt as stated herein. Flowery Branch will select the underwriter, bond counsel and local counsel. Flowery Branch will endeavor in good faith to be fiscally responsible in minimizing, to the extent possible, the costs and fees associated with the debt issuance process.

Gainesville Debt.

P. The Transportation Special Purpose Local Option Sales and Use Tax election ballot shall contain language required by the Act for the authorization of general obligation Gainesville debt in the principal amount of up to $40,000,000 (Forty Million Dollars).

Q. Gainesville may use the proceeds of its debt for the purpose of funding Major Projects or Gainesville Projects, paying capitalized interest (if any), and paying the cost of issuing its debt. Gainesville acknowledges that it is solely responsible for the payment of its debt, including any and all costs, interest, and fees associated therewith.

R. Gainesville's debt shall be paid first from the proceeds of its portion of the Transportation Special Purpose Local Option Sales and Use Tax or from the proceeds of the Transportation Special Purpose Local Option Sales and Use Tax which have been designated for Major Projects for which Gainesville has been specifically designated as administrator within this Agreement. In the event that there are insufficient Transportation Special Purpose Local Option Sales and Use Tax collections to pay the debt from its portion of the proceeds, Gainesville shall pay any shortfall attributable to the debt from its general funds (the "Debt Service Payments"). Gainesville covenants that, in order to make the Debt Service Payments when due from its general funds to the extent required, it will exercise its power of taxation to the extent necessary to timely pay any amounts required to be paid hereunder and it will make available and use for such payments all taxes levied and collected for that purpose together with funds from any other source. Gainesville further covenants and agrees that in order to make funds available for such purpose, it will, in its general revenue, appropriation, and budgetary measures whereby its tax funds or revenues and the allocation thereof are controlled or provided for, include sums sufficient to timely satisfy such Debt Service Payments that may be required to be made from its general funds, whether or not any other sums are included in such measure, until all payments so required

to be made shall have been made in full. The obligation of Gainesville to make any payments that may be required to be made from its general funds shall constitute a general obligation of Gainesville and a pledge of full faith and credit of Gainesville to provide the funds required to timely fulfill any such obligation.

S. The obligation of Gainesville to make Debt Service Payments and to perform and observe the other agreements on its part contained in this Section 11 shall be absolute and unconditional. Until such time as the principal of and interest on the debt shall have been paid in full or provision for the payment thereof shall have been made, Gainesville (a) will not suspend or discontinue any payments provided for herein, (b) will perform and observe all of its other agreements contained in this Agreement, and (c) will not terminate this Agreement for any cause, including, without limiting the generality of the foregoing, failure to complete any Project, a defect in any Project, or any failure of any other party to this Agreement to observe, whether express or implied, any duty, liability or obligation arising out of or connected with this Agreement.

T. Gainesville will be responsible for all facets of the debt issuance and repayment process for its debt as stated herein. Gainesville will select the underwriter, bond counsel and local counsel. Gainesville will endeavor in good faith to be fiscally responsible in minimizing, to the extent possible, the costs and fees associated with the debt issuance process.

Oakwood Debt.

U. The Transportation Special Purpose Local Option Sales and Use Tax election ballot shall contain language required by the Act for the authorization of general obligation Oakwood debt in the principal amount of up to $1,000,000 (One Million Dollars).

V. Oakwood may use the proceeds of its debt for the purpose of funding Major Projects or Oakwood Projects, paying capitalized interest (if any), and paying the cost of issuing its debt. Oakwood acknowledges that it is solely responsible for the payment of its debt, including any and all costs, interest, and fees associated therewith.

W. Oakwood's debt shall be paid first from the proceeds of its portion of the Transportation Special Purpose Local Option Sales and Use Tax or from the proceeds of the Transportation Special Purpose Local Option Sales and Use Tax which have been designated for Major Projects for which Oakwood has been specifically designated as administrator within this Agreement. In the event that there are insufficient Transportation Special Purpose Local Option Sales and Use Tax collections to pay the debt from its portion of the proceeds, Oakwood shall pay any shortfall attributable to the debt from its general funds (the "Debt Service Payments"). Oakwood covenants that, in order to make the Debt Service Payments when due from its general funds to the extent required, it will exercise its power of taxation to the extent necessary to timely pay any amounts required to be paid hereunder and it will make available and use for such payments all taxes levied and collected for that purpose together with funds from any other source. Oakwood further covenants and agrees that in order to make funds available for such purpose, it will, in its general revenue, appropriation, and budgetary measures whereby its tax funds or revenues

and the allocation thereof are controlled or provided for, include sums sufficient to timely satisfy such Debt Service Payments that may be required to be made from its general funds, whether or not any other sums are included in such measure, until all payments so required to be made shall have been made in full. The obligation of Oakwood to make any payments that may be required to be made from its general funds shall constitute a general obligation of Oakwood and a pledge of full faith and credit of Oakwood to provide the funds required to timely fulfill any such obligation.

X. The obligation of Oakwood to make Debt Service Payments and to perform and observe the other agreements on its part contained in this Section 11 shall be absolute and unconditional. Until such time as the principal of and interest on the debt shall have been paid in full or provision for the payment thereof shall have been made, Oakwood (a) will not suspend or discontinue any payments provided for herein, (b) will perform and observe all of its other agreements contained in this Agreement, and (c) will not terminate this Agreement for any cause, including, without limiting the generality of the foregoing, failure to complete any Project, a defect in any Project, or any failure of any other party to this Agreement to observe, whether express or implied, any duty, liability or obligation arising out of or connected with this Agreement.

Y. Oakwood will be responsible for all facets of the debt issuance and repayment process for its debt as stated herein. Oakwood will select the underwriter, bond counsel and local counsel. Oakwood will endeavor in good faith to be fiscally responsible in minimizing, to the extent possible, the costs and fees associated with the debt issuance process.

Section 12. Citizen Review Committee.

A. The County and Municipalities agree that the members of the Citizen Review Committee, which is reviewing expenditures for SPLOST VII and SPLOST VIII Projects, shall also review the Projects and Purposes set forth in this Agreement.

B. The Citizen Review Committee will represent the interests of the citizens of the County and its Municipalities and shall receive and review periodic status reports concerning all Projects and Purposes to be funded from the net proceeds of the Transportation Special Purpose Local Option Sales and Use Tax Program. The Committee shall review Transportation Special Purpose Local Option Sales and Use Tax Projects and Purposes of the County and Municipalities and shall invite the necessary staff, division directors, department heads, administrators, and appropriate third parties to provide Project and Purpose updates to the Committee.

C. The mission of the Citizen Review Committee is to ensure all Hall County and Municipal Transportation Special Purpose Local Option Sales and Use Tax Program Purposes will be reported and executed in an efficient, transparent, and fully accountable manner in keeping with the purposes of the overall Transportation Special Purpose Local Option Sales and Use Tax Program.

D. Hall County will provide appropriate staff, technical advisors, and meeting facilities to support the Committee's activities.

E. The County Administrator and City Managers or designee(s), as applicable, of the County and Municipalities to this Agreement shall appoint any successor members of the Committee based on the following methodology:

1. The Citizen Review Committee is comprised of nine members, five members appointed by the County Administrator; two members appointed by the City Manager of the City of Gainesville; one member appointed by a majority of the City Managers or designees of Buford, Braselton, Flowery Branch, Oakwood and Rest Haven; and one member appointed by a majority of the City Managers or designees of Clermont, Gillsville, and Lula.

2. Each member shall serve a four (4) year term. Each committee member selected to serve shall be appointed, or reappointed, every four years by the County and Municipality officials.

3. No individual who holds state, county, or city elected office shall be eligible to serve as a member of the Citizen Review Committee during the term of such elected office, and the position of any member shall be deemed vacant upon such member qualifying as a candidate for elected public office. A member may be removed from the Citizen Review Committee with cause by the appointing official(s). Vacancies which may occur on the Committee shall be filled for the remainder of the unexpired term in the same manner as original appointments.

4. Citizen Review Committee members are expected to serve with integrity and shall adhere to the highest ethical standards. Members who miss two consecutive meetings without reasonable cause or whose annual attendance drops below 50% shall be deemed to have vacated their seat on the Committee.

Section 13. Default.

The failure of any party to perform its obligations under this Agreement shall constitute an event of default.

Section 14. Liability for Noncompliance.

The County and the Municipalities shall comply with all applicable local, state, and federal statutes, ordinances, rules and regulations. In the event that any Municipality fails to comply with the requirements of the Act (Official Code of Georgia Annotated § 48- 8-260 et seq.), the County shall not be held liable for such noncompliance. No consent or waiver, express or implied, by any party to this Agreement, to any breach of any covenant, condition or duty of another party shall be construed as a consent to, or waiver of, any future breach of the same.

Section 15. Counterparts.

This Agreement may be executed in several counterparts, each of which shall be deemed an original and all of which together shall constitute one and the same instrument.

Section 16. Governing Law.

This Agreement and all transactions contemplated hereby shall be governed by, and construed and enforced in accordance with, the laws of the State of Georgia.

Section 17. Severability.

Should any provision of this Agreement or application thereof to any person or circumstance be held invalid or unenforceable, the remainder of this Agreement or the application of such provision to any person or circumstance, other than those to which it is held invalid or unenforceable, shall not be affected thereby, and each provision of this Agreement shall be valid and enforceable to the full extent permitted by law.

Section 18. Entire Agreement.

This Agreement embodies and sets forth all the provisions and understandings between the parties relative to the Purposes and Projects. There are no provisions, agreements, understandings, representations, or inducements, either oral or written, between the parties other than those hereinabove set forth. Any and all prior provisions, agreements, contracts or understandings, either oral or written, between the parties relative to the Purposes and Projects are hereby rescinded and superseded by this Agreement.

Section 19. Amendments.

This Agreement shall not be amended or modified except by agreement in writing executed by the governing authorities of the County and all of the Municipalities.

Section 20. Notices.

All notices, demands or requests required or permitted to be given pursuant to this Agreement shall be in writing and shall be deemed to have been properly given or served and shall be effective three days after having been deposited or placed in the United States mail, postage prepaid to the addresses appearing below, or when delivered by hand to the addresses indicated below:

A. Town of Braselton
PO Box 306
4982 Highway 53
Braselton, Georgia 30517
Attention: Town Manager

B. City of Buford
2300 Buford Highway
Buford, Georgia 30518
Attention: City Manager

C. Town of Clermont
109 King St.
Clermont, Georgia 30527
Attention: Town Clerk

D. City of Flowery Branch
P.O. Box 757
5410 Pine Street
Flowery Branch, Georgia 30542
Attention: City Manager

E. City of Gainesville
P.O. Box 2496
300 Henry Ward Way
Gainesville, Georgia 30503
Attention: City Manager

F. City of Gillsville
P.O. Box 25
6288 GA-52
Gillsville, Georgia 30543-0025
Attention: City Clerk

G. City of Lula
6055 Main St.
Lula, Georgia 30554
Attention: Mayor

H. City of Oakwood
P.O. Box 99
4035 Walnut Street
Oakwood, Georgia 30566
Attention: City Manager

I. City of Rest Haven
428 Thunder Road
Buford, Georgia 30518
Attention: City Clerk

J. Hall County
P.O. Box 1435
2875 Browns Bridge Road
Gainesville, Georgia 30503
Attention: County Administrator

Section 21. Public Facilities.

The County and Municipalities agree that each approved Transportation Special Purpose Local Option Sales and Use Tax Project associated with this Agreement shall be maintained as a public facility and in public ownership.

Section 22. Mediation.

The County and the Municipalities agree to submit any controversy arising under this Agreement to mediation as a part of the dispute resolution process. The parties to the mediation shall mutually select a neutral party to serve as mediator. Costs of mediation shall be shared equally among the parties to the mediation.

IN WITNESS WHEREOF, all parties have executed this Agreement on the date indicated herein.

SIGNATURES ON THE FOLLOWING THREE PAGES

HALL COUNTY, GEORGIA

By: _____
Richard Higgins, Chairman, Board of Commissioners

Attest:

_____ _____
Jennifer Rivera, Clerk Date

Approved as to Form:

_____
William J. Linkous, III, County Attorney

TOWN OF BRASELTON

By: _____
Honorable Kurt Ward, Mayor

Attest:

_____ 6-15-2023
Jennifer Scott, City Clerk Date

Approved as to Form:

_____
Gregory Jay, Town Attorney

CITY OF BUFORD

By: _____
Honorable Phillip Beard, Chairman, Buford City Commission

Attest:

_____ _____
Kim Wolfe, City Clerk Date

Approved as to Form:

_____
Gregory Jay, City Attorney

TOWN OF CLERMONT

By: _____
Honorable James E. Nix, Mayor

Attest:

_____ 6/15/23
Amy Lomax, City Clerk Date

Approved as to Form:

_____
David Syfan, City Attorney

CITY OF FLOWERY BRANCH

By: Edward R. Asbridge
Honorable Ed Asbridge, Mayor

Attest:
Shelia R Cooper
Shelia Cooper, City Clerk

6/20/2023
Date

Approved as to Form:
Karen G. Thomas, City Attorney

CITY OF GAINESVILLE

By: W. Sam Couvillon
Honorable W. Sam Couvillon, Mayor

Attest:
Denise O. Jordan
Denise O. Jordan, City Clerk

6/20/2023
Date

Approved as to Form:
Abbott S. Hayes, Jr., City Attorney

CITY OF GILLSVILLE

By: S. Wade Dale
Honorable Wade Dale, Mayor

Attest:
Sandra Helton
Sandra Helton, City Clerk

6/19/23
Date

Approved as to Form:
David Syfan, City Attorney

CITY OF LULA

By: _____
Honorable Joe Thomas, Mayor

Attest:

Tangee B. Puckett
Tangee Puckett, City Clerk

6/28/23
Date

Approved as to Form:

_____
Joey Homans, City Attorney

CITY OF OAKWOOD

By: _____
Honorable Lamar Scroggs, Mayor

Attest:

_____
Mai Chang, City Clerk

6/26/23
Date

CITY OF OAKWOOD
OAKWOOD
GEORGIA
FORWARD
TOGETHER
SEAL

Approved as to Form:

_____
Donald Hunt, City Attorney

CITY OF REST HAVEN

By: _____
Honorable Kenneth Waycaster, Mayor

Attest:

_____
Monica Montgomery, City Clerk

_____
Date

Approved as to Form:

_____
Gregory Jay, City Attorney

EXHIBIT A

TSPLOST Projects		
Description		Amount
Total Estimated Collections		**$ 325,000,000**
Purposes - Construction of roads, bridges, sidewalks, multiuse paths, intersection improvements, traffic safety enhancements, and stormwater projects pertaining to roadway and other transportation projects.		
Major Projects (80% bucket)		
Spout Springs Road Widening Phase II	County	$ 40,000,000
McEver Road Widening Phase I	County	58,000,000
Ridge Road Corridor Improvements	Gainesville	40,000,000
Park Hill Drive Intersection Improvements	Gainesville	11,000,000
Hilton Drive Extension	Gainesville	26,000,000
McEver Road Intersection Improvements	County	12,500,000
SR 365 Safety Improvements	County	20,000,000
SR 369/Browns Bridge Road Corridor Improvements/Widening	County	35,846,000
Little Five Points Intersection	County	2,500,000
Mt Vernon Road and Rilla Road Intersection	County	3,000,000
Mt Vernon Road and Jim Hood Road Intersection	County	2,500,000
Memorial Park Drive and Atlanta Highway Intersection	County	4,000,000
Old Oakwood Road at Balus Creek Road Culvert Replacement and Road Alignment	Oakwood	1,300,000
Main Street, Flat Creek Road and Old Oakwood Road Intersection Improvements	Oakwood	850,000
Frazer Road Corridor Improvements	Buford	1,504,000
Thompson Mill Road Improvements	Braselton	1,000,000
Total Estimated Cost Major Transportation Projects	**80%**	**$ 260,000,000**

Distribution to Jurisdictions, Local Projects (20% bucket)		
Purposes described by each jurisdiction below.		
Hall County Portion	**42.5000%**	**$27,625,000**
Municipality Portion	**57.5000%**	**$37,375,000**
Unincorporated Hall County	42.5000%	$27,625,000
Municipality Breakdown		
Braselton	3.9981%	2,598,748
Flowery Branch	9.7953%	6,366,932
Gainesville	29.9856%	19,490,609
Buford	3.3984%	2,208,936
Gillsville	0.4998%	324,843
Clermont	1.3993%	909,562
Oakwood	5.3974%	3,508,310
Lula	2.9986%	1,949,061
Rest Haven	0.0277%	18,000
		$ 37,375,000
Total Estimated Distributions To Jurisdictions, Local Projects	**20%**	**$ 65,000,000**
Total Estimated Cost of T-SPLOST Projects		**$ 325,000,000**

Hall County Project List

Project Name/Description	Estimated Project Cost
Construction of roads, bridges, sidewalks, multiuse paths, intersection improvements, traffic safety enhancements, and stormwater projects pertaining to roadway and other transportation projects.	
Projects may include: Hog Mountain Road corridor improvements/widening; improving sight distance issues at East Hall Road and Gaines Mill Road, and Hog Mountain and Blackjack Road; 2 foot paved shoulder widening with RPMs and signage upgrades on Williams Road, County Line Road, Gaines Mill Road, Harmony Church Road, Blackjack Road, Bark Camp Road, and Hubert Stephens Road; intersection improvements at Old Cornelia Highway and Joe Chandler Road, Hog Mountain Road and Wade Orr Road, Hog Mountain Road and Capitola Farm Road, and Union Church Road and Elizabeth Lane; signage replacement/upgrades on Chestatee Road and Cool Springs Road; and other related projects.	$17,625,000
Resurfacing, including full depth reclamation, base and paving, culvert repair, traffic markers, patching, shoulder preparation, and related projects.	
Projects may include: resurfacing of approximately 25 miles of Hall County maintained roads based on the established annual road rating criteria and scoring system; and other related projects.	$10,000,000
Total Estimated Cost of Hall County Projects	**$27,625,000**

Municipalities Project List

Braselton

Project Name/Description	Estimated Project Cost
Construction of roads, bridges, sidewalks, multiuse paths, intersection improvements, traffic safety enhancements, and stormwater projects pertaining to roadway and other transportation projects.	$2,300,000
Projects may include: Highway 211, Highway 347, Thompson Mill Road, Spout Springs Road, Dunbar Road, and other related projects.	
Resurfacing, including full depth reclamation, base and paving, culvert repair, traffic markers, patching, shoulder preparation, and related projects.	$298,748
Projects may include: resurfacing of approximately 2 miles of Braselton maintained roads based on the established annual road rating criteria and scoring system; and other related projects.	
Total Estimated Cost of Braselton Projects	**$2,598,748**

Buford

Project Name/Description	Estimated Project Cost
Resurfacing, which may include full depth reclamation, base and paving, culvert repair, traffic markers, patching, sidewalks, shoulder preparation; Construction of roads, stormwater projects pertaining to roadway and other transportation and related projects. Projects may include: McEver Road/Peachtree Industrial Blvd., Holiday Road, Carter Road, B.U. Bowman Drive, Golden Parkway, Bristol Industrial Way, BelleWood Court, Palmero Court, Lexie Lane, South Waterworks Road, Green Road, Cemetery Road, New Bethany Road, North Waterworks Road, Big Creek Road, Lee Drive, Shoreland Drive, Hutchins Drive, Blackberry Lane, Maple Avenue, Frazer Road and other related projects.	$2,208,936
Total Estimated Cost of Buford Projects	**$2,208,936**

Clermont

Project Name/Description	Estimated Project Cost
Construction of roads, sidewalks, and stormwater projects pertaining to roadway and other transportation projects	$710,000
Projects may include widening, repair and resurfacing of Oxford Road; sidewalk construction; stormwater projects on King Street and Main Street; and other projects.	
Resurfacing, patching and related projects.	$199,562
Project may include the repair and resurfacing of various streets in the Town.	
Total Estimated Cost of Clermont Projects	**$909,562**

Flowery Branch

Project Name/Description	Estimated Project Cost
Construction of roads, bridges, sidewalks, multiuse paths, pedestrian upgrades (and related amenities), intersection improvements, turning lanes, traffic lights, traffic safety enhancements, and stormwater projects pertaining to roadway and other transportation projects.	
Projects may include: Intersections at Phil Niekro Blvd – Mulberry Street, Radford Road – McEver Road, Radford Road – Atlanta Highway. Sidewalks – Phil Niekro Blvd, Mitchell Street, East Main Street, downtown streets, Capitola Farm Road.	$2,000,000
Resurfacing, including full depth reclamation, base and paving, culvert repair, traffic markers, patching, shoulder preparation, sidewalks, multiuse paths, pedestrian upgrades (and related amenities) and similar projects.	$4,366,932
Projects may include: Portions of Phil Niekro, Lake Crossing Blvd, Mitchell Street (Phase 2), East Main, downtown roads, Capitola Road.	
Total Estimated Cost of Flowery Branch Projects	**$6,366,932**

Gainesville

Project Name/Description	Estimated Project Cost
Construction of roads, bridges, sidewalks, multiuse paths, pedestrian upgrades (and related amenities), intersection improvements, turning lanes, traffic lights, traffic safety enhancements, and stormwater projects pertaining to roadway and other transportation projects.	
Projects may include: Memorial Park Drive, Old Flowery Branch Road, Green Hill Circle, West End Avenue, Green Street, Riverside Drive, Enota Drive, Beverly Road, M.L.K. Jr Blvd, Pearl Nix Pkwy, Sky View Drive, Fullenwider Road, Athens Street, White Sulphur Road, Community Way, Spring Street, Atlanta Hwy, Shallowford Road, Gaines Mill Road, Smallwood Road, Aviation Blvd, Marler Street, Academy Street, East Ave, Limestone Pkwy, Old Cornelia Hwy, Park Hill Drive, Thompson Bridge Road, Browns Bridge Road, Jesse Jewell Pkwy; and other similar projects.	$14,490,608
Resurfacing, including full depth reclamation, base and paving, culvert repair, traffic markers, patching, shoulder preparation, sidewalks, multiuse paths, pedestrian upgrades (and related amenities) and similar projects.	$5,000,000
Projects may include: resurfacing of approximately 20 miles of City of Gainesville maintained roads based on the established annual road rating criteria and scoring system; and other similar projects.	
Total Estimated Cost of Gainesville Projects	**$19,490,608**

Gillsville

Project Name/Description	Estimated Project Cost
Construction of roads, bridges, sidewalks, multiuse paths, pedestrian upgrades (and related amenities), intersection improvements, turning lanes, traffic lights, traffic safety enhancements, and stormwater projects pertaining to roadway and other transportation projects. Projects may include: Extension of Wilson Dr. Sidewalks from Downtown to the Park, New Parking Lot for Downtown Park	$210,000
Resurfacing, including full depth reclamation, base and paving, culvert repair, traffic markers, patching, shoulder preparation, sidewalks, multiuse paths, pedestrian upgrades (and related amenities) and similar projects. Projects may include -Resurface of Old Town Parking Lot & Driveway, Widening of Church St. and School St.	$114,843
Total Estimated Cost of Gillsville Projects	**$324, 843**

Lula

Lula Project Name/Description	Estimated Project Cost
Construction of roads, bridges, sidewalks, multiuse paths, intersection improvements, traffic safety enhancements, and stormwater projects pertaining to roadway and other transportation projects.	$349,061
Projects may include any of the 82 roads recognized as within the city and maintained by the city as prioritized by the City Council, and or other related projects.	
Resurfacing, including full depth reclamation, base and paving, culvert repair, traffic markers, patching, shoulder preparation, and related projects.	$1.600,000
Projects may include: resurfacing of approximately 4 miles of city maintained roads based on the established annual road rating criteria and scoring system; and other related projects.	
Total Estimated Cost of Lula Projects	**$1,949,061**

Oakwood

Project Name/Description	Estimated Project Cost
Construction of roads, bridges, sidewalks, multiuse paths, intersection improvements, traffic safety enhancements, and stormwater projects pertaining to roadway and other transportation projects.	
Projects may include: Installation of sidewalks, sidewalk improvements, sidewalk repair, including curb and gutter installation and repair, on Main Street, Railroad Street, Oakwood Road, Flat Creek Road, Bishops Lane, Fairfax Drive, Fullerton Drive, Rutledge Drive, Nellie Drive; Highlands to Island Spur connections; Railroad Crossing safety improvements and intersection improvements at Railroad Street, Main Street, Walnut Circle; Intersection improvements at W. White and H. F Reed Industrial Parkway; Oak Street widening and improvements; and other related projects.	$3,272,000
Resurfacing, including full depth reclamation, base and paving, culvert repair, traffic markers, patching, shoulder preparation, and related projects.	$236,310
Projects may include: Full Depth Reclamation of Nellie Drive, Culvert repair and replacement on annual projects list; and other related projects.	
Total Estimated Cost of Oakwood Projects	**$3,508,310**

Rest Haven

Project Name/Description	Estimated Project Cost
Resurfacing, which may include full depth reclamation, base and paving, culvert repair, traffic markers, patching, sidewalks, shoulder preparation; Construction of roads, stormwater projects pertaining to roadway and other transportation and related projects. Projects may include: Thunder Road, Ledford Road.	$18,000
Total Estimated Cost of Rest Haven Projects	**$18,000**

EXHIBIT B

STATE OF GEORGIA

COUNTY OF HALL

NOTICE OF ELECTION

TO THE QUALIFIED VOTERS OF HALL COUNTY, GEORGIA

NOTICE IS HEREBY GIVEN that a special election has been called and will be held on Tuesday, November 7, 2023 in all of the elections districts of Hall County, Georgia, at which time there will be submitted to the qualified voters of Hall County, Georgia for their determination the question whether a special one percent (1%) sales and use tax shall be imposed in the special district of Hall County for a period of time not to exceed five (5) years and for the raising of an estimated amount of $325,000,000 for the purpose of funding transportation Purposes and Projects in Hall County, the Town of Braselton, the City of Buford, the Town of Clermont, the City of Flowery Branch, the City of Gainesville, the City of Gillsville, the City of Lula, the City of Oakwood, and the City of Rest Haven.

If the imposition of the sales and use tax is approved by the voters of Hall County in the referendum described in this notice, such vote shall also constitute approval of the issuance of general obligation debt (in the form of general obligation bonds, promissory notes, or other instruments, as the Board of Commissioners of Hall County may approve) of Hall County in the aggregate principal amount of $130,000,000 in conjunction with the imposition of the sales and use tax, to be payable first from a separate account in which are placed Hall County's share of the proceeds from the sales and use tax and then from the general funds of Hall County, for the purpose of providing funds to pay the cost of the Hall County projects. Such general obligation debt, if so authorized, shall be dated as of the date of delivery or such other date(s) as the Board of Commissioners shall approve, shall be in such denomination or denominations as the Board of Commissioners shall approve, shall bear interest from such date at such rate or rates as the Board of Commissioners shall approve but not exceeding seven percent (7 %) per annum in any year. The principal of such general obligation debt shall mature (on the dates and by the scheduled maturity or by mandatory redemption, as the Board of Commissioners may approve) in the years and in the amounts as follows:

Year	Amount
2025	$24,000,000
2026	$24,960,000
2027	$25,960,000
2028	$27,000,000
2029	$28,080,000

The general obligation debt of Hall County may be issued in one or more series, and on one or more dates of issuance as the Board of Commissioners may approve; provided, however, that the aggregate principal amount of such general obligation debt shall not exceed $130,000,000. The general obligation debt of Hall County may be made subject to redemption prior to maturity, to the extent provided by law, upon terms and conditions to be determined by the Board of Commissioners.

If the imposition of the sales and use tax is approved by the voters in the Referendum described in this notice, such vote shall also constitute approval of the issuance of general obligation debt (in the form of general obligation bonds, promissory notes, or other instruments, as the Town of Braselton may approve) of the Town of Braselton in the aggregate principal amount of $3,500,000 in conjunction with the imposition of the sales and use tax, to be payable first from a separate account in which are placed the proceeds received by the Town of Braselton from the sales and use tax and then from the general funds of the Town of Braselton, for the purpose of providing funds to pay the cost of the Braselton projects. Such general obligation debt, if so authorized, shall be dated as of the date of delivery or such other date(s) as the Town of Braselton shall approve, shall be in such denomination or denominations as the Town of Braselton shall approve, shall bear interest from such date at such rate or rates as the Town of Braselton shall approve but not exceeding seven percent (7 %) per annum in any year. The principal of such general obligation debt shall mature (on the dates and by the scheduled maturity or by mandatory redemption, as the Town of Braselton may approve) in the years and in the amounts as follows:

Year	Amount
2025	$645,000
2026	$670,000
2027	$700,000
2028	$725,000
2029	$760,000

The general obligation debt of the Town of Braselton may be issued in one or more series, and on one or more dates of issuance as the Town of Braselton may approve; provided, however, that the aggregate principal amount of such general obligation debt shall not exceed $3,500,000. The general obligation debt of the Town of Braselton may be made subject to redemption prior to maturity, to the extent provided by law, upon terms and conditions to be determined by the Town of Braselton.

If the imposition of the sales and use tax is approved by the voters in the Referendum described in this notice, such vote shall also constitute approval of the issuance of general obligation debt (in the form of general obligation bonds, promissory notes, or other instruments, as the City of Flowery Branch may approve) of the City of Flowery Branch in the aggregate principal amount of $5,000,000 in conjunction with the imposition of the sales and use tax, to be payable first from a separate account in which are placed the proceeds received by the City of Flowery Branch from

the sales and use tax and then from the general funds of the City of Flowery Branch, for the purpose of providing funds to pay the cost of the Flowery Branch projects. Such general obligation debt, if so authorized, shall be dated as of the date of delivery or such other date(s) as the City of Flowery Branch shall approve, shall be in such denomination or denominations as the City of Flowery Branch shall approve, shall bear interest from such date at such rate or rates as the City of Flowery Branch shall approve but not exceeding seven percent (7 %) per annum in any year. The principal of such general obligation debt shall mature (on the dates and by the scheduled maturity or by mandatory redemption, as the City of Flowery Branch may approve) in the years and in the amounts as follows:

Year	Amount
2025	$925,000
2026	$960,000
2027	$1,000,000
2028	$1,040,000
2029	$1,075,000

The general obligation debt of the City of Flowery Branch may be issued in one or more series, and on one or more dates of issuance as the City of Flowery Branch may approve; provided, however, that the aggregate principal amount of such general obligation debt shall not exceed $5,000,000. The general obligation debt of the City of Flowery Branch may be made subject to redemption prior to maturity, to the extent provided by law, upon terms and conditions to be determined by the City of Flowery Branch.

If the imposition of the sales and use tax is approved by the voters in the referendum described in this notice, such vote shall also constitute approval of the issuance of general obligation debt (in the form of general obligation bonds, promissory notes, or other instruments, as the City of Gainesville may approve) of the City of Gainesville in the aggregate principal amount of $40,000,000 in conjunction with the imposition of the sales and use tax, to be payable first from a separate account in which are placed the proceeds received by the City of Gainesville from the sales and use tax and then from the general funds of the City of Gainesville, for the purpose of providing funds to pay the cost of the Gainesville projects. Such general obligation debt, if so authorized, shall be dated as of the date of delivery or such other date(s) as the City of Gainesville shall approve, shall be in such denomination or denominations as the City of Gainesville shall approve, shall bear interest from such date at such rate or rates as the City of Gainesville shall approve but not exceeding seven percent (7 %) per annum in any year. The principal of such general obligation debt shall mature (on the dates and by the scheduled maturity or by mandatory redemption, as the City of Gainesville may approve) in the years and in the amounts as follows:

Year	Amount
2025	$7,385,000
2026	$7,680,000
2027	$7,990,000
2028	$8,305,000
2029	$8,640,000

The general obligation debt of the City of Gainesville may be issued in one or more series, and on one or more dates of issuance as the City of Gainesville may approve; provided, however, that the aggregate principal amount of such general obligation debt shall not exceed $40,000,000. The general obligation debt of the City of Gainesville may be made subject to redemption prior to maturity, to the extent provided by law, upon terms and conditions to be determined by the City of Gainesville.

If the imposition of the sales and use tax is approved by the voters in the referendum described in this notice, such vote shall also constitute approval of the issuance of general obligation debt (in the form of general obligation bonds, promissory notes, or other instruments, as the City of Oakwood may approve) of the City of Oakwood in the aggregate principal amount of $1,000,000 in conjunction with the imposition of the sales and use tax, to be payable first from a separate account in which are placed the proceeds received by the City of Oakwood from the sales and use tax and then from the general funds of the City of Oakwood, for the purpose of providing funds to pay the cost of the Oakwood projects. Such general obligation debt, if so authorized, shall be dated as of the date of delivery or such other date(s) as the City of Oakwood shall approve, shall be in such denomination or denominations as the City of Oakwood shall approve, shall bear interest from such date at such rate or rates as the City of Oakwood shall approve but not exceeding seven percent (7 %) per annum in any year. The principal of such general obligation debt shall mature (on the dates and by the scheduled maturity or by mandatory redemption, as the City of Oakwood may approve) in the years and in the amounts as follows:

Year	Amount
2025	$185,000
2026	$190,000
2027	$200,000
2028	$210,000
2029	$215,000

The general obligation debt of the City of Oakwood may be issued in one or more series, and on one or more dates of issuance as the City of Oakwood may approve; provided, however, that the aggregate principal amount of such general obligation debt shall not exceed $1,000,000. The general obligation debt of the City of Oakwood may be made subject to redemption prior to

maturity, to the extent provided by law, upon terms and conditions to be determined by the City of Oakwood.

The ballot question with regard to whether the tax should be approved by the electors of the Special District shall be in substantially the following form:

"( ) Yes
( ) No

Shall a special one percent sales and use tax be imposed in the special district consisting of Hall County for a period of time not to exceed five years and for the raising of an estimated amount of $325,000,000 for transportation purposes?

If imposition of the tax is approved by the voters, such vote shall also constitute approval of the issuance of general obligation debt of Hall County in the principal amount of $130,000,000 for the above purpose.

If imposition of the tax is approved by the voters, such vote shall also constitute approval of the issuance of general obligation debt of the Town of Braselton in the principal amount of $3,500,000 for the above purpose.

If imposition of the tax is approved by the voters, such vote shall also constitute approval of the issuance of general obligation debt of the City of Flowery Branch in the principal amount of $5,000,000 for the above purpose.

If imposition of the tax is approved by the voters, such vote shall also constitute approval of the issuance of general obligation debt of the City of Gainesville in the principal amount of $40,000,000 for the above purpose.

If imposition of the tax is approved by the voters, such vote shall also constitute approval of the issuance of general obligation debt of the City of Oakwood in the principal amount of $1,000,000 for the above purpose."

Voters desiring to vote for the imposition of the sales and use tax shall do so by voting "Yes" and voters desiring to vote against the imposition of the sales and use tax shall do so by voting "No" as to the question propounded.

Any brochures, listings, or other advertisements issued by Hall County and such Municipalities, or by any other person, firm, corporation, or association with the knowledge and consent of Hall County and such Municipalities, shall be deemed to be a statement of intention of Hall County and such Municipalities concerning the use of the proceeds of the general obligation debt to be issued in connection with the sales and use tax for transportation Purposes.

The several places for holding the election shall be in the regular and established precincts of Hall County, and all polls will be open from 7:00 a.m. to 7:00 p.m. on November 7, 2023, the date fixed for the election. Advance voting will be conducted in accordance with law.

EXHIBIT B

The last day to register to vote in this election is October 9, 2023, through 5:00 p.m.

Those qualified to vote at the election shall be determined in all respects in accordance with the Constitution and statutes of the United States of America and the laws of the State of Georgia.

This Notice is given pursuant to a Resolution of the Board of Commissioners of Hall County adopted on July _____, 2023 calling for an election on the question whether or not to impose a Transportation Special Purpose Local Option Sales and Use Tax, subject to Hall County voters' approval of a referendum on November 7, 2023. A copy of the Resolution is available for public inspection in the office of the County Clerk of Hall County during regular business hours.

This the _____ day of July, 2023.

_____

Lori Wurtz, Hall County Elections Director,
On behalf of the Board of Elections and Registration
Of Hall County, Georgia

AGENDA ITEM

Other Business - Planning and Development

REPORT TO: **Work Session (07/10/23)**

REPORT TO: **Voting Meeting (07/13/23)**

ITEM NO: 374/2023

SUBJECT: Public Hearing to adopt Hall County's updated short-term work program and capital improvement element.

Meetings:

Work Session Date: 07/10/23 **Voting Meeting Date:** 07/13/23

Executive Summary:

Presenter: RD

Recommendation:

Purpose of Request:
In accordance with the Georgia Development Impact Fee Act and the Development Fee Compliance Requirements of the Georgia Department of Community Affairs, the Hall County Board of County Commissioners will hold a public hearing to adopt the Capital Improvement Element/Short-Term Work Program Update. This is required to maintain qualified local government status.

History:

Facts and Issues:

Options:

Funding Requested	$ 0.00
Are funds within current budget?	No
Source of Funds	
Does the action involve a Resolution, Ordinance, Contract, Agreement, etc.?	No
Has it been reviewed by the County Attorney?	No
Is there a deadline for this item?	2023-07-13

Approvals:

Submit	Approve	Budget	Finance
RD	RD	TS	WG

Attorney	Administration	Clerk
VS	CR	JR

Attachments:
Adoption Resolution
Annual Impact Fee Report
Annual Short Term Work Program

Hall County
Adoption Resolution

WHEREAS, Hall County has prepared an annual update to a Capital Improvements Element and Short-Term Work Program; and

WHEREAS, the Department of Community Affairs has reviewed the annual update and provided an advisory comment regarding "all impact fees shall be maintained in one or more interest bearing accounts, and "Administration" is not an eligible public facility category, and therefore recommend removal of that project from the report"; and

WHEREAS, Hall County has reviewed the advisory comment and the Administration project has been removed from the Capital Improvement Element update, per the advisory comment. Hall County notes that impact fees are maintained in an interest bearing account however, interest rate on that checking account is fairly minimal, and therefore no interest has been allocated to impact fees.; and

WHEREAS, the annual update of the Capital Improvements Element and Short-Term Work Program was prepared in accordance with the Development Impact Fee Compliance Requirements and the Minimum Planning Standards and Procedures for Local Comprehensive Planning established by the Georgia Planning Act of 1989, and has been reviewed for consistency with the appropriate Regional Water Plans and with our Rules for Environmental Planning Criteria (O.C.G.A. 12-2-8); and approved by the Georgia Department of Community Affairs; and an adoption Public Hearing was held on July 13, 2023.

BE IT THEREFORE RESOLVED, that the Chairman and Board of Commissioners of Hall County does hereby adopt the annual update of the Capital Improvements Element and Short-Term Work covering the five-year period from 2023-2027, as per the requirements of the Georgia Planning Act.

Adopted this _____day of _____.

HALL COUNTY BOARD OF COMMISSIONERS

By:_____
Chairman Richard Higgins

By:_____
Commissioner Kathy Cooper, District 1

By:_____
Commissioner Billy Powell, District 2

By:_____
Commissioner Gregg Poole, District 3

By:_____
Commissioner Jeff Stowe, District 4

ATTEST:

_____
Commission Clerk

APPROVED AS TO FORM:

_____
County Attorney

HALL COUNTY	Annual Impact Fee Financial Report - 2021/2022								Final as of 6-23-2023
Public Facility	**Libraries**	**Fire Protection**	**Sheriff's Patrol**		**Public Safety Facility**	**Parks/Recreation**	**Admin**	**CIE Prep**	**TOTAL**
Impact Fee Balance June 30, 2021**	$ 635,038.40	$ 434,210.13	$ 94,827.89		$ 430,120.08	$ 4,054,310.56	$ 181,432.71	$ (7,233.63)	$ 5,822,706.14
Impact Fees Collected (July 1, 2021 through June 30, 2022)	719,798.85	96,959.16	26,607.29		118,264.54	1,390,376.35	50,220.61	1,845.31	2,404,072.11
Interest Earned*	-	-	-		-	-	-	-	-
(Impact Fee Refunds)	-	-	-		-	-	-	-	-
(Project Expenditures)	(190,000.00	-	-		(300,000.00	(534,910.39	-	-	(1,024,910.39
Impact Fee Fund Balance June 30, 2022	$ 1,164,837.25	$ 531,169.29	$ 121,435.18		$ 248,384.62	$ 4,909,776.52	$ 231,653.32	$ (5,388.32)	$ 7,201,867.86
Impact Fees Available	$ 1,164,837.25	$ 531,169.29	$ 121,435.18		$ 248,384.62	$ 4,909,776.52	$ 231,653.32	$ (5,388.32)	$ 7,201,867.86
Impact Fees Obligated	$ -	$ -	$ -		$ -	$ 596,307.87	$ -	$ -	$ 596,307.87
This annual report covers the last completed fiscal year - July 1, 2021 to June 30, 2022. The Hall County Impact Fee Program began March, 2003									
There was no interest earned in FY 2022. However, impact fee funds are housed in an interest bearing account. The interest for this account is minimal for the County as a whole.									

HALL COUNTY **Capital Improvements Project Update 2012-2022***

Public Facility: **Libraries**

Service Areas: **County-wide**

Project Description	Project Start Date	Project End Date	Cost of Project*	Percentage of Funding from Impact Fees	Other Funding Sources	Impact Fee Expenditures	Impact Fee Funds Available **	Project Status
Prior Year Expenditures	2004	2012	$ 1,266,744.22	100.000%		$ 1,266,744.22	$ -	Complete
Collection Materials	2011	2012	164,225.00	60.892%	General Fund, State of GA	100,000.00	-	Complete
Collection Materials NH Libr.	2011	2012	54,512.00	100.000%		54,512.00	-	Complete
North Hall Branch Library	2011	2014	2,897,152.00	18.062%	SPLOST	523,275.00	-	Complete
Collection Materials	2012	2013	180,586.00	55.375%	General Fund, State of GA	100,000.00	-	Complete
Collection Materials	2013	2014	305,420.00	32.742%	General Fund, State of GA	100,000.00	-	Complete
Collection Materials	2014	2015	428,611.00	23.331%	General Fund, State of GA	100,000.00	-	Complete
Collection Materials	2015	2016	100,000.00	100.000%		100,000.00	-	Complete
Collection Materials	2016	2017	100,000.00	100.000%		100,000.00	-	Complete
Collection Materials	2017	2018	130,000.00	100.000%		130,000.00		Complete
Collection Materials	2018	2019	135,000.00	100.000%		135,000.00	-	Complete
Collection Materials	2019	2020	100,000.00	100.000%		100,000.00	-	Complete
Collection Materials	2020	2021	100,000.00	100.000%		150,000.00	-	Complete
Collection Materials	2021	2022	190,000.00	100.000%		190,000.00	-	Complete
Collection Materials	2022	2023	190.00	100.000%		-	200,000.00	In process
Expansion of Gainesville Library	2018	2021	5,350,000.00	21.691%	SPLOST, State of GA Grant	1,160,460.59	-	Complete
New East Hall Library	2025	2027	5,000,000.00	19.297%	SPLOST, State of GA Grant	-	964,837.25	Planning Phase
Total of Costs, Expenditures & Impact Fees Encumbered			**$ 16,502,440.22**			**$ 4,309,991.81**	**$ 1,164,837.25**	

* For Completed Projects, actual amounts expended are shown instead of the originally estimated costs, while assuring that the Percentage of Funding from Impact Fees does not exceed the percentage impact fee eligible from the adopted Capital Improvement Plan.

** Denotes the amount of impact fee funds available as of 6-30-2022

HALL COUNTY **Capital Improvements Project Update 2012-2022***

Public Facility: **Fire Protection**

Service Areas: **County-wide except the City of Gainesville**

Project Description	Project Start Date	Project End Date	Cost of Project*	Percentage of Funding from Impact Fees	Other Funding Sources	Impact Fee Expenditures	Impact Fee Funds Available **	Project Status
Fire Station #16	2012	2014	$ 1,408,338.00	12.725%	SPLOST	$ 179,216.50	$ -	Complete
Fire Station #17	2020	2025	6,705,795.00	7.921%	SPLOST	-	531,169.29	In Final Design Phase
Fire Apparatus #17	2020	2022	1,133,269.00	0.000%	SPLOST	-	-	Complete
Unidentified Projects	TBD	TBD	-			-	-	To be Determined
			-			-	-	
Total of Costs, Expenditures & Impact Fees Encumbered			**$ 9,247,402.00**			**$ 179,216.50**	**$ 531,169.29**	

* For Completed Projects, actual amounts expended are shown instead of the originally estimated costs, while assuring that the Percentage of Funding from Impact Fees does not exceed the percentage impact fee eligible from the adopted Capital Improvement Plan.

** Impact Fee Funds Available as of 6-30-2022

HALL COUNTY **Capital Improvements Project Update 2012-2022***

Public Facility:	**Public Safety Facility**
Service Ares:	**County-wide**

Project Description	Project Start Date	Project End Date	Cost of Project*	Percentage of Funding from Impact Fees	Other Funding Sources	Impact Fee Expenditures	Impact Fees Funds Available **	Project Status
Expansion of Visitation Room^	2014	2017	$ 407,402.00	100.000%		$ 407,401.97	$ -	Complete
Expansion of Jail Parking	2018	2018	83,737.50	100.000%		83,737.50	-	Complete
Expansion of Sheriff's Headquarters	2021	2022	1,042,461.00	28.778%	Capital Projects Fund	300,000.00	-	Complete
Construction of new Sheriff Training Facility	2024	2026	5,000,000.00	4.968%	SPLOST / Capital Projects Fund	-	248,384.62	In Design Phase
Unidentified Projects	TBD	TBD	-			-	-	To be Determined
Total of Costs, Expenditures & Impact Fees Encumbered			**$ 6,533,600.50**			**$ 791,139.47**	**$ 248,384.62**	

* For Completed Projects, actual amounts expended are shown instead of the originally estimated costs, while assuring that the Percentage of Funding from Impact Fees does not exceed the percentage impact fee eligible from the adopted Capital Improvement Plan

** Impact Fee Funds Available as of 6-30-2022

HALL COUNTY **Capital Improvements Project Update 2012-2022***

Public Facility:	**Parks & Recreation**
Service Ares:	**County-wide except the City of Gainesville**

Project Description	Project Start Date	Project End Date	Cost of Project*	Percentage of Funding from Impact Fees	Other Funding Sources	Impact Fee Expenditures	Impact Fee Funds Available **	Impact Fees Obligated***	Project Status
Ball Fields	2010	2011	$ 1,666,999.00	4.244%	General Fund	$ 70,746.91	$ -	$ -	Complete
Clermont Gymnasium	2012	2013	1,025,846.00	18.820%	SPLOST	193,067.00	-	-	Complete
Albert Banks Park (Field of Dreams	2013	2014	400,000.00	56.788%	Grant, General Fund	227,151.02	-	-	Complete
Cherokee Bluffs Park	2015	2021	3,212,958.00	86.438%	SPLOST	2,777,217.13	-	-	Complete
Purchase of Future Greenspace for Healan's Mill Greenway	2018	2018	669,533.02	50.712%	Grant, General Fund	339,533.02	-	-	Complete
Tadmore Park Renovation	2021	2023	1,824,421.51	19.693%	SPLOST	359,290.94	-	97.52	In process
Alberta Banks Renovation	2022	2024	1,033,330.00	54.449%	SPLOST	62,640.79	500,000.00	48,610.53	In process
Laurel Park Restoration	2022	2026	2,130,250.00	17.299%	SPLOST / Capital Projects	27,516.00	341,000.00	55,032.00	In process
AG Center Renovation	2022	2024	1,699,000.00		SPLOST / Capital Projects	-	450,000.00	450,000.00	In process
Healan's Mill Park Construction	2022	2025	3,036,197.00	19.283%	N/A	85,462.66	500,000.00	42,567.82	In Design Phase
Unidentified Projects	TBD	TBD	-				3,118,776.52	-	Not Started
Total of Costs, Expenditures & Impact Fees Encumbered			**$ 16,698,534.53**			**$ 4,142,625.47**	**$ 4,909,776.52**	**$ 596,307.87**	

* For Completed Projects, actual amounts expended are shown instead of the originally estimated costs, while assuring that the Percentage of Funding from Impact Fees does not exceedthe percentage impact fee eligible from the adopted Capital Improvement Plan

** Impact Fee Funds Available as of 6-30-2022

***This is the balance of encumbrances to date in FY2023 for Parks Projects funded with impact fees.

HALL COUNTY **Capital Improvements Project Update 2012-2022***

Public Facility:	**Sheriff's Patrol**
Service Ares:	**County-wide**

Project Description	Project Start Date	Project End Date	Cost of Project*	Percentage of Funding from Impact Fees	Other Funding Sources	Impact Fee Expenditures	Impact Fee Funds Available **	Project Status
South Hall Precinct	2014	2015	$ 979,000.00	21.9%	SPLOST	$ 168,626.24	$ -	Complete
Construction of New North Hall Precinct	2026	2028	3,000,000.00	4.0%	Capital / SPLOST	-	121,435.18	Not Started Yet; Planning Phase
Unidentified Projects			-			-	-	To be Determined
			-			-	-	-
Total of Costs, Expenditures & Impact Fees Encumbered			**$ 3,979,000.00**			**$ 168,626.24**	**$ 121,435.18**	

* For Completed Projects, actual amounts expended are shown instead of the originally estimated costs, while assuring that the Percentage of Funding from Impact Fees does not exceedthe percentage impact fee eligible from the adopted Capital Improvement Plan

** Impact Fee Funds Available as of 6-30-2022

HALL COUNTY **Capital Improvements Project Update 2012-2022***

Public Facility:	**Administration**
Service Ares:	**County-wide**

Project Description	Project Start Date	Project End Date	Cost of Project*	Percentage of Funding from Impact Fees	Other Funding Sources	Impact Fee Expenditures	Impact Fee Funds Available **	Project Status
						$ -	$ -	
Unidentified Projects							231,653.32	To be Determined
							-	
Total of Costs, Expenditures & Impact Fees Encumbered			**$** -			**$** -	**$ 231,653.32**	

* For Completed Projects, actual amounts expended are shown instead of the originally estimated costs, while assuring that the Percentage of Funding from Impact Fees does not exceedthe percentage impact fee eligible from the adopted Capital Improvement Plan

** Impact Fee Funds Available as of 6-30-2022

HALL COUNTY

Short-Term Work Program

The following section lists the Short Term Work Program for Hall County. The relevant short-term items are listed in each component of the plan as part of the implementation section.

The update of the Short-Term Work Program is provided to supplement the Impact Fee Update per Department of Community Affairs requirements. The Short-Term Work program provided here is a component of the adopted Comprehensive Plan adopted in June 2004 and amended in May 2005. A minor Comprehensive Plan updated was approved in June 2022. The STWP is intended to provide the status of the respective items. The language in the Comments section of the Short-Term Work Program indicates the list of accomplishments. The Comments section indicates Completed, In Progress, Canceled, or Postponed with a brief explanation. Where appropriate the expected time frame of the work task is listed. The County is currently preparing a major update to the Comprehensive Plan with an anticipated adoption of June 2024.

Economic Development

Major Actions	Time Frame	Estimated Cost	Responsible Party	Portion Chargeable to Impact Fees	Sources of Funds	Comments
1. Prepare a Unified Development Code to update, consolidate and streamline land use and development regulations to support the goals of the Comprehensive Plan	2019-24	$245,000	County staff and Consultants	None	Dev. Services Fund	TSW was hired in April 2019 to work on developing a new UDC. The estimated adoption date is June 2024.
2. Draft County preservation plan with implementation tools	2019-24	N/A	County staff	N/A	N/A	County will be working on developing a joint historic preservation ordinance with City of Gainesville in conjunction with the UDC.
3. Extend water/sewer to targeted development locations	2020-24	$10-12 Million	County	None	SPLOST & Connection Charges	In Progress – county is extending sewer service in targeted areas along SR 365 and in south Hall County. The completion date for the new South hall sewer line is fall of 2023. The future development map will be used to guide sewer expansion.
4. Work with Convention and Visitors Bureau re tourism infrastructure support	2020-24	N/A	Convention and Visitors Bureau with County staff	N/A	N/A	In Progress – ongoing coordination/discussions to provide support.
5. Cooperate with business/ educational community to create closer education/job training ties	2020-24	N/A	Greater Hall Chamber, local colleges, County staff	N/A	N/A	In Progress – Ongoing work with the Chamber.

Housing

Major Actions	Time Frame	Estimated Cost	Responsible Party	Portion Chargeable to Impact Fees	Sources of Funds	Comments
1. Comprehensively revise county UDC—new residential uses and zone districts, residential quality and protection standards.	2019-24	N/A	County staff and consultants	N/A	Dev. Services Fund	In progress. Code changes will be evaluated on an ongoing basis and/ or in conjunction with UDC.
2. Study revisions to county zoning maps to implement the comprehensive plan.	2020-24	N/A	County staff	N/A	N/A	Ongoing activity – In conjunction with current Comprehensive Plan and future UDC.
3. Undertake housing analysis tied to economic development goals	2020-24	N/A	County staff and consultants	N/A	N/A	In Progress – County staff is now providing direct oversight of ongoing housing programs within the county. The County has reinitiated the GICH program and the committee.

Natural and Cultural Resources

Major Actions	Time Frame	Estimated Cost	Responsible Party	Portion Chargeable to Impact Fees	Sources of Funds	Comments
1. Comprehensively revise county UDC—tree protection, open space, PD regulations priorities for revision. Address other environmental standards in Phase 2.	2019-24	N/A	County staff and consultants	N/A	Dev. Services Fund	In Progress – tree ordinance and other code changes will be evaluated on an ongoing basis and/or in conjunction with the new UDC.
2. Study revisions to county zoning maps to bring them into accord with the comprehensive plan.	2019-24	N/A	County staff	N/A	N/A	In Progress – In conjunction with current UDC development process.
3. Identify key natural and cultural resources and consider for acquisition	2020-24	N/A	County staff	N/A	Dev. Services Fund	In Progress – County is working on restoration of the Healan's Head's Mill and develop a 100 acre park associated with it. County will hire consultant to initiate green space planning.
4. Extend water/sewer to targeted development locations in comprehensive plan; avoid service in sensitive natural areas	2020-24	$5-7 Million	County	None	SPLOST & Connection Charges	In Progress – County is extending sewer service in targeted areas of south and north Hall County.
5. Adopt coordinated intergovernmental annexation policy that includes resource protection provisions	2020-24	N/A	County staff	N/A	N/A	In Progress – Continue implementation of the Service Delivery Strategy adopted in July 2017.

Community Facilities

Major Actions	Time Frame	Estimated Cost	Responsible Party	Portion Chargeable to Impact Fees	Sources of Funds	Comments
1. Comprehensively revise county UDC—new residential uses and zone districts; fiscal impact analysis regulations.	2020-24	N/A	County staff and consultants	N/A	N/A	TSW was hired in April 2019 to work on developing a new UDC. The estimated adoption date is June 2024.
2. Revise county zoning maps to bring into accord with comprehensive plan location of development and infrastructure availability.	2020-24	N/A	County staff	N/A	N/A	In Progress – In conjunction with current Comprehensive Plan and future UDC.
3. Extend water/sewer to targeted development locations.	2020-25	$15-20 Million	County	None	SPLOST & Connection Charges	In Progress – County is extending sewer service in targeted areas of south and north Hall County.
4. Adopt coordinated intergovernmental annexation policy and agreement.	2020-24	N/A	County	N/A	N/A	In Progress – Continue implementation of the Service Delivery Strategy adopted in July 2017.

Land Use

Major Actions	Time Frame	Estimated Cost	Responsible Party	Portion Chargeable to Impact Fees	Sources of Funds	Comments
1. Comprehensively revise county UDC—quality regulations, environmental standards, fiscal impact assessment, etc.	2019-24	N/A	County staff and consultants	N/A	Dev. Services Fund	TSW was hired in April 2019 to work on developing a new UDC. The estimated adoption date is June 2024.
2. Study revisions to county zoning maps to bring into accord with comprehensive plan.	2019-24	N/A	County staff	N/A	N/A	In Progress – ongoing implementation with current Comprehensive Plan and future UDC.
3. Extend water/sewer to targeted development locations.	2020-25	$15-20 Million	County	None	SPLOST & Connection Charges	In Progress – County is extending sewer service in targeted areas of south and north Hall County.
4. Improve regional marketing.	2020-24	N/A	County/Greater Hall Chamber	N/A	N/A	In Progress – Ongoing work with the Chamber of Commerce.
5. Adopt coordinated intergovernmental annexation policy and agreement.	2020-24	N/A	County	N/A	N/A	Completed – Continue implementation of the Service Delivery Strategy adopted in July 2017. Implement the policy with of any new annexation requests.
6. Comprehensive Plan Update	2024	$150,000	County	NA	Dev. Services Fund	Ongoing. The minor update to the comprehensive plan was adopted in June 2022. Major Comprehensive Plan update adoption is anticipated in June 2024.

Intergovernmental Actions

Major Actions	Time Frame	Estimated Cost	Responsible Party	Portion Chargeable to Impact Fees	Sources of Funds	Comments
1. Revise County development codes/consider complementary design and other standards with Cities.	2019-24	N/A	County staff and consultants	N/A	Dev. Services Fund	TSW was hired in April 2019 to work on developing a new UDC. The estimated adoption is June 2024.
2. Draft county/city preservation plan with implementation tools.	2019-24	N/A	County staff	N/A	N/A	County has developed a joint historic preservation ordinance with City of Gainesville. The County intends to adopt the ordinance in conjunction with the UDC.
3. Identify key natural and cultural resources and consider for acquisition.	2020-24	N/A	County staff	N/A	N/A	In Progress – County updated the Park Master Plan in 2019 in conjunction with the CORPS Master Plan. Ongoing discussions/public involvement regarding park locations should take place.
4. Extend water/sewer to targeted development locations in comprehensive plan; avoid service in sensitive natural areas.	2020-25	$15-20 Million	County	None	SPLOST & Connection Charges	In Progress – County is extending sewer service in targeted areas of south and north Hall County.
5. Draft and adopt coordinated intergovernmental annexation policy. Use as countywide model.	2020-24	N/A	County staff	N/A	N/A	Completed – Continue implementation of the Service Delivery Strategy adopted in July 2017.

AGENDA ITEM

Other Business - Planning and Development

REPORT TO: **Work Session (07/10/23)**

REPORT TO: **Voting Meeting (07/13/23)**

ITEM NO: 345/2023

SUBJECT: Public Hearing for a new Malt Beverage Package license for Supermercado Hidalgo, located at 210 Atlanta Highway, Gainesville, GA 30501. Ownership is FN and MN Investment, LLC. License holder is Firoz Himani and the Registered Agent is Maria Diaz. Commission District 4.

Meetings:

Work Session Date: 07/10/23 **Voting Meeting Date:** 07/13/23

Executive Summary:

Presenter: RD

Recommendation:
Approve

Purpose of Request:
Public Hearing for a new Malt Beverage Package license for Supermercado Hidalgo, located at 210 Atlanta Highway, Gainesville, GA 30501. Ownership is FN and MN Investment, LLC. License holder is Firoz Himani and the Registered Agent is Maria Diaz. Commission District 4.

History:

Facts and Issues:

Options:

Funding Requested	$ 0.00
Are funds within current budget?	No
Source of Funds	
Does the action involve a Resolution, Ordinance, Contract, Agreement, etc.?	No
Has it been reviewed by the County Attorney?	Yes
Is there a deadline for this item?	

Approvals:

Submit	Approve	Attorney	Administration

Submit	Approve	Attorney	Administration
BS	RD	WLI	CR
Clerk			
JR			

Attachments:

Memo
Map
Survey Map

Hall County Government

COMMUNITY DEVELOPMENT AND INFRASTRUCTURE
BUSINESS LICENSE DIVISION

POST OFFICE DRAWER 1435

GAINESVILLE, GA 30503

t: 770.531.6815 | f: 770.531.4953

DIRECTOR
Srikanth Yamala

PLANNING AND DEVELOPMENT DIRECTOR
Randi Doveton

BUSINESS LICENSE DIRECTOR
Brandi Smith

To: Randi Doveton, Planning Director

From: Brandi Smith, Business License Director

Date: 06/21/2023

Subject: Supermercado Hidalgo

New Alcohol Application for Supermercado Hidalgo located at 210 Atlanta Hwy. Gainesville, GA 30501.

- Managing Agent – Firoz Himani of Johns Creek, GA
- Registered Agent – Maria Diaz of Flowery Branch, GA
- Owner – FN and MN Investment, LLC
- Commission District 4

It is my recommendation to approve the application.

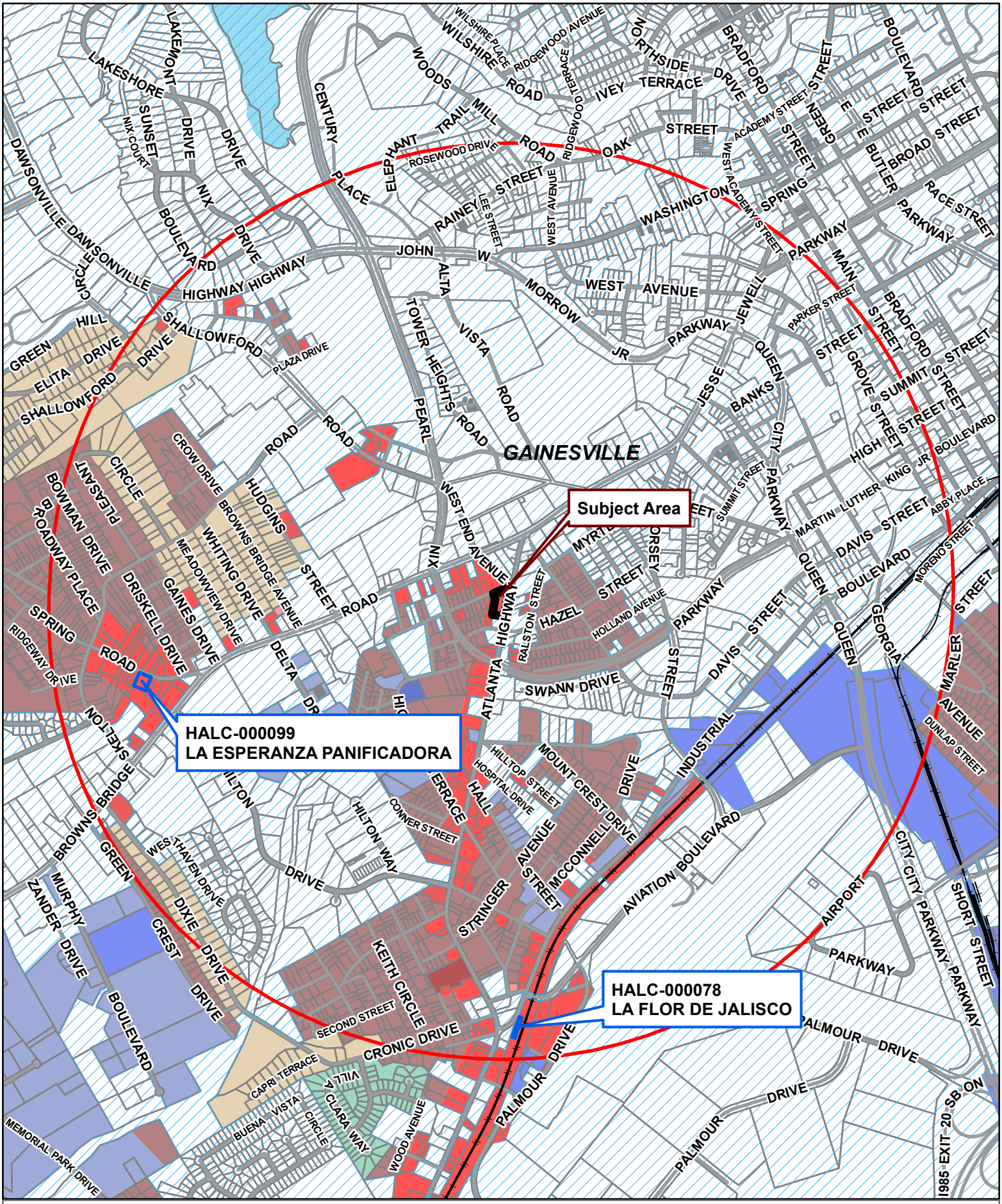
Subject Area
HALC-000099
LA ESPERANZA PANIFICADORA
HALC-000078
LA FLOR DE JALISCO
GAINESVILLE
Subject Property: 210 Atlanta Highway, Gainesville, GA 30501
0 500 1,000 2,000 3,000 Feet
Zoning Boundary
City Limits
Church
Active Alcohol Licenses
1 Mile Buffer
Subject Area
Structure
N
Date: 6/20/2023

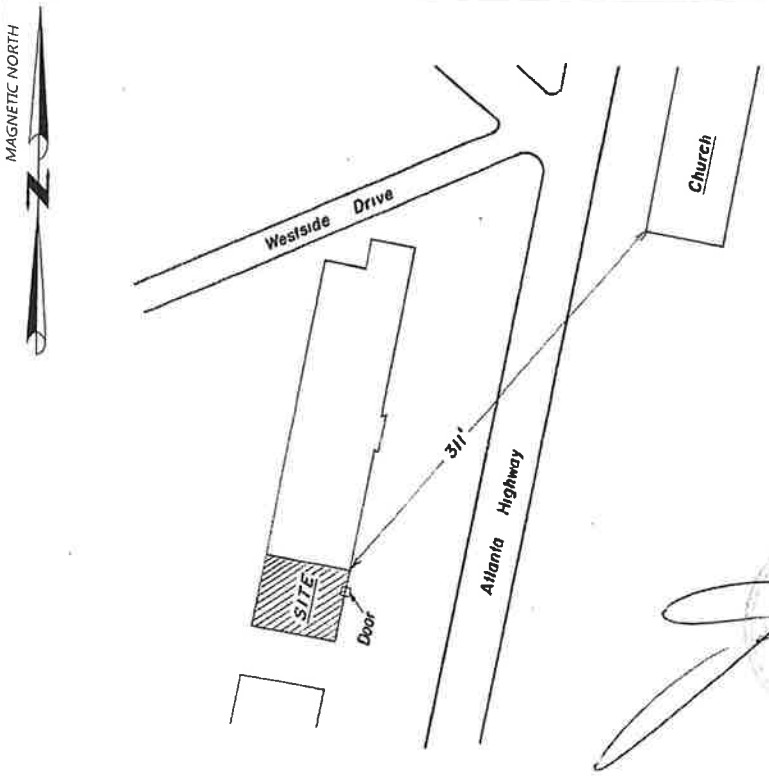

Site Address-
210 Atlanta Highway
Suites 6-7
Gainesville, Georgia
30501

The following distances were measured in a straight line from the nearest point on site, per Hall County code:

SCHOOL- 4670' to Gainesville High School, @ 830 Century Place.

CHURCH- 311' to Iglesia Pentecostal Bethel de Gainesville, @ 201 Atlanta Highway.

ALCOHOL TREATMENT- 12950' to Avita Community Partners, @ 3509 Mabry Road.

Hall County Malt Beverage and Wine License Survey for:

Mauricio Garcia Moreno

DATE: 5/9/2023	SCALE: 1" = 100'	0 50 100 200 GRAPHIC SCALE IN FEET	
DRAWN BY: GD			
LAND LOT 166	9th DISTRICT		SECTION
HALL COUNTY			GEORGIA

GEORGIA LAND SURVEYING CO.
155 CLIFTWOOD DRIVE, ATLANTA, GA 30328
PHONE (404)255-4671 FAX (404)255-6607
WWW.GEORGIALANDSURVEYING.COM

204385

AGENDA ITEM

Other Business - Planning and Development

REPORT TO: **Work Session (07/10/23)**

REPORT TO: **Voting Meeting (07/13/23)**

ITEM NO: 363/2023

SUBJECT: Public Hearing to amend Title 17 of the Official Code of Ordinances of Hall County, Georgia, to comply with O.C.G.A. § 36-66-1 through 36-66-6, commonly known as the Zoning Procedures Law, as amended by the adoption of HB 1405; to repeal conflicting ordinances and resolutions; and for other purposes.

Meetings:

Work Session Date: 07/10/23 **Voting Meeting Date:** 07/13/23

Executive Summary:

Presenter: RD

Recommendation:
Approval.

Purpose of Request:
Public Hearing to Amend Title 17 of the Official Code of Ordinances of Hall County, Georgia, to comply with O.C.G.A. § 36-66-1 through 36-66-6, commonly known as the Zoning Procedures Law, as amended by the adoption of HB 1405; to repeal conflicting ordinances and resolutions; and for other purposes.

History:

Facts and Issues:

Options:

Funding Requested	$ 0.00
Are funds within current budget?	No
Source of Funds	
Does the action involve a Resolution, Ordinance, Contract, Agreement, etc.?	Yes
Has it been reviewed by the County Attorney?	Yes
Is there a deadline for this item?	

Approvals:

Submit	Approve	Attorney	Administration

Submit	Approve	Attorney	Administration
AD	RD	WLI	CR
Clerk			
JR			

Attachments:

Board Memo
Recommendation Report
Strikethrough of Proposed Changes
ZPL Presentation
Resolution

HALL COUNTY
GEORGIA

POST OFFICE DRAWER 1435
GAINESVILLE, GA 30503

t: 770.531.6809 | f: 770.531.3902

DIRECTOR
Srikanth Yamala

PLANNING AND DEVELOPMENT
DIRECTOR
Randi Doveton

Hall County Government

COMMUNITY DEVELOPMENT AND INFRASTRUCTURE
PLANNING AND DEVELOPMENT

To: Richard Higgins, Chairman
Kathy Cooper, District 1 Commissioner
Billy Powell, District 2 Commissioner
Gregg Poole, District 3 Commissioner
Jeff Stowe, District 4 Commissioner

From: Randi Doveton, Director of Planning & Development

Date: June 6, 2023

Subject: Public Hearing to Amend Title 17 of the Official Code of Hall County, Georgia, to comply with O.C.G.A. §§ 36-66-1 through 36-66-6, commonly known as the Zoning Procedures Law, as amended by the adoption of HB 1405; to repeal conflicting ordinances and resolutions; and for other purposes. **| Hall County Planning Staff, applicant.**

The request before you is from Hall County Planning Staff to amend Title 17 of the Official Code to meet the requirements of House Bill 1405 related to the Zoning Procedures Law (ZPL). This item is applicable to all Commission Districts.

These amendments will bring Title 17 into compliance with the State Code as amended by HB 1405. The two primary changes are:
1) The increased notice time from a minimum of fifteen (15) to a minimum of thirty (30) days.
2) The appeal timeline of the Planning Commission actions increased from five (5) days to thirty (30) days.

HB 1405 is a state amendment to Zoning Procedures Law (ZPL); its four (4) main objectives are:
1. Define quasi-judicial decisions
2. Outline additional hearing and notice requirements for carrying out quasi-judicial decisions (previously only zoning decisions were addressed)
3. Articulate appeals procedures:
- Zoning decisions de novo review
- Quasi-judicial decisions appellate review (writ of certiorari)

4. Stipulates additional hearing and public notice requirements for amendments (zoning decisions) related to multi-family uses permitted in single-family residential zoning districts

At their June 5, 2023 meeting, the Hall County Planning Commission voted to recommend approval **(3-0, Sosebee & Varner absent)**.

There were **no written comments** submitted in advance of the Planning Commission meeting and **no one spoke during the public hearing.**

There have been no changes to the request since the Planning Commission took action.

HALL COUNTY PLANNING COMMISSION
RECOMMENDATION REPORT

Applicant ..... Hall County Planning Staff

Request ..... Text Amendment

Proposed Use ..... Update related regulations for compliance with updtes to state Zoning Procedures Law (ZPL)

Zoning ..... Applicable to all PRD developments

Location ..... **Throughout Hall County**

Commission District ..... One, Two, Three, and Four

Planning Commission Date ..... June 5, 2023

Staff Recommendation ..... Approval to comply with state regulations.

Planning Commission Recommendation…….. Approval
Vote: 3-0 (Sosebee & Varner absent)

Public Forum:

There were no comments in support or opposition.

Summary Analysis

Two bills recently adopted by the state legislature, HB 1405 and HB 916, affect the County's zoning procedures. Known by the State Statute, the "Zoning Procedures Law" (ZPL), outlines the minimum required notice and hearing procedures local and county governments are required to follow in carrying out zoning and quasi-judicial decisions. Georgia municipalities have until July 1, 2023 to adopt these new regulations into their local ordinances.

Per the Georgia General Assembly, the revisions to the ZPL, HB 1405, are as follows:

> A BILL to be entitled an Act to amend Title 36 of the Official Code of Georgia Annotated, relating to local governments, so as to revise "The Zoning Procedures Law"; to revise provisions related to judicial review of zoning decisions; to revise definitions; to provide for requirements for zoning decisions by boards or agencies using delegated powers; to require review procedures for decisions made by boards or agencies using delegated powers; to provide for judicial review of zoning decisions; to require certain designations relating to appeals of quasi-judicial decisions; to provide for related matters; to repeal conflicting laws; and for other purposes.

HB 1405 specifically lays out additional public hearing and public notice requirements for county-initiated rezonings for specific changes to multi-family uses in single-family zoning districts. The new ZPL dictates

that signs are required every 500 feet in the affected area, specifies the size of the required newspaper ads, requires additional public hearings, and specifies a new timeline for approval by the City Council. Additionally, HB 1405 updated the public-notice requirements for quasi-judicial proceedings.

Separately, the Georgia Assembly has revised the appeals process, as follows:

> A BILL to be entitled an Act to amend Title 5 of the O.C.G.A., relating to appeal and error, so as to provide for a unified procedure for appealing decisions of a lower judicatory to a superior or state court; to repeal and reserve Chapter 4 of said title, relating to certiorari to superior court; to amend various titles of the Official Code of Georgia Annotated, so as to provide for conforming changes; to correct cross-references and remove obsolete or improper references; to provide for related matters; to provide for an effective date and applicability; to repeal conflicting laws; and for other purposes.

HB 916 lays out a new process for appealing zoning decisions. Rather than requiring a "writ of certiorari," appeals can be made as a "petition for review."

Lastly, the proposed redlines address a third bill, SB 213, approved by the legislature in the current session; therefore those updates related to allowing existing manufactured homes to be replaced have been incorporated as well.

In response to these statutes, staff has recommended amendments to *Title 17 Zoning Regulations*:

- 17.10.010 Zoning regulations adopted; authority.
    - Deleted references to zoning board of adjustments
- 17.20.1061. Special exception.
    - Clarified that the Hall County special exception process is a legisltative process, not a quasi-judicial process
- 17.20.1062. Special use.
    - Clarified that the Hall County conditional use process is a legisltative process, not a quasi-judicial process
- 17.240.110. Lot density exceptions
    - Removed references to special exception and zoning board of adjustments
- 17.340.010. Criteria for continuation of nonconforming use.
    - Sub-section C addresses the requirements of SB 213 that requires the County to allow manufactured housing to be replaced without regard for nonconforming uses, lots, or characteristics.
- 17.350.010. - 17.350.070. and 17.350.090.
    - Removed references to zoning board of adjustments

  17.350.080. Expiration of approval. and 17.380.130. Board of commissioners' action.
    - Expirations of ZPL-related review processes cannot expire by its own terms, so this section has been deleted.
- 17.360.020. Appeals.
    - There are multiple subsections that outline portions of appeals proceedings. Those have been consolidated into Chapter 17.370.
- Chapter 17.370. Appeals of administrative officials and decision-making bodies
    - Numerous adjustments have been made within this chapter to align with ZPL as well as maintain internal consistencies. In summary, appeals of administrative staff are heard by Planning Commission, and appeals of Planning Commission decisions are heard by the Board of Commissioners.
    - Defined who can file appeals and referenced the required process for an appeal – for quasi-judicial decisions, appeals are made by petition for review (per HB 1405 and HB 916)
    - Appeal deadlines (for appeals at any level) have been set to 30 days (extended from 5 days) to comply with the new ZPL requirements.

- 17.380.030. Initiation of proposed amendments.
    - Clarified who can file amendments
    - Distinguished between owner-initiated and County-initiated rezonings to allow for different noticing standards permitted by ZPL
- 17.380.060. Planning commission and Hall County Commission consideration and decision.
    - Updates for internal consistencies and to outline public input procedures
    - Removed hearing timeline – it is not required by state law and exposes the County to unnecessary procedural errrors if that timeline were not followed.
- 17.380.070. - 17.380.130.
    - Adjusted required notice period from 15-45 days to 30-45 days to comply with ZPL
    - Referenced state statute for several application types that require additional processes (e.g.: annexations and incorporating multi-family uses into single-family zoning districts). These statutes will be used rarely and are confusing, so staff have recommended incorporating by reference only.
    - Other minor clean-ups
- 17.380.150. Successive applications.
    - Condensed the successive application provisions into one section for clarity and to avoid internal conflict.
- 17.380.160. Appeals of board of commission actions.
    - Referenced required appeal proceedings outlined in ZPL.
    - Authorized the Director of Planning and Development to accept service in an appeal in compliance with ZPL.
- 17.380.170 Georgia Zoning Procedures Law.
    - Incorporated general catch-all for compliance with state statues.

Attachments:

1. Adopting Ordinance and revisions to *Title 17 Zoning Regulations*
2. Copy of HB 1405
3. Copy of HB 916
4. Copy of SB 213

When considering a text amendment, the Planning Commission must follow the same procedural guidelines as for a rezoning request (17.380.040), this includes public notice. The proposal was advertised in the Gainesville Times but since the proposal is not related to a specific parcel, no signs were posted.

- **Excerpts from the minutes of the June 6, 2023 meeting**

Applicant's Presentation:

Beth Garmon, Zoning Director, presented a summary of the request. Ms. Garmon explained the changes coming from the state and how she is working with the legal department to meet the changes needed.

Public Forum:

There were no comments in support or opposition.

Planning Commission Comments:

Mr. Braswell stated that having appeal periods run longer will cause delays for applicants.

<u>Motion:</u> A motion to approve was made by Ms. Pilcher and seconded by Mr. Hunt. Vote: 3-0 (Sosebee & Varner absent)

- **17.10.010. - Zoning regulations adopted; authority.**

The board of county commissioners for Hall County, Georgia, as authorized by article IX, section IV, paragraph II of the Constitution of the State of Georgia, does hereby create a planning commission known as the Hall County Planning Commission, and a zoning board of adjustment known as the Hall County Zoning Board of Adjustment, and does hereby adopt zoning regulations for the following purposes: to define certain words used herein; to create zone boundaries; to regulate the locations of trades, professions, businesses, industries, apartment houses, and residences; to define the area of lots; to fix the location and size of yards and the alignment of buildings; to establish setback lines; to provide for nonconforming uses; to provide for the administration and enforcement thereof together with penalties for the violation of its provisions; to adopt a map or maps of any section or sections thereof for zoning purposes of the unincorporated areas of Hall County; to authorize variances and conditional uses; and to provide for court review.

Deleted: special exceptions

(Res. of 8-28-78, § 2; Code 1991, § 17.10.010; Res. of 2-27-03(1), § 1)

Chapter 17.20 (Definitions) is hereby amended by inserting new Sections 17.20.1061 and 17.20.1062 which provide as follows:

"**17.20.1061. Special exception.**

The term "special exception" when used in Title 17 shall refer to a variance, and shall be defined in the same manner as the term "variance" is defined herein.

17.20.1062. Special use.

The term "special use" when used in Title 17 shall refer to a conditional use, and shall be defined in the same manner as the term "conditional use" is defined herein."

17.240.110. - Lot density exceptions.

Residential zones. In all residential zoning districts except planned development districts, only one principal structure and its customary accessory buildings, including agricultural buildings, may be erected on any

parcel recorded as a separate lot or tract with the clerk of superior court unless otherwise specifically permitted by either:

Approval of a site plan for multi-family development, in zones permitting such uses, by the planning commission;

Approval of a caretaker or hardship variance by the Planning Commission.

Deleted: special exception

Deleted: zoning board of adjustment.

Non-residential zones. In all other zoning districts except planned development districts, only one principal structure and its customary accessory buildings for each 15,000 square feet of land area may be erected on any parcel. A minimum of 20 percent of the site must be retained as open space. That open-space area must be maintained as either a natural or landscaped area.

Nonconforming uses. Any building containing a nonconforming use is considered a principal structure.

(Res. of 8-28-78, § 16(I); Res. of 2-14-83; Res. of 5-11-87; Res. of 7-10-89; Res. of 4-26-91; Res. of 4-15-93; Code 1991, § 17.240.080; Res. of 2-27-03(1), § 1)

17.340.010. Criteria for continuation of nonconforming use.

A. Any structure or use of land existing at the time of enactment or subsequent amendment of the resolution codified in this title, but not in conformity with its use regulations and provisions, may be continued with the following limitations. It shall not be:

1. Changed to another nonconforming use;
2. Re-established after discontinuance of that use for one year;
3. Enlarged beyond its size at the time the use or structure became nonconforming. This includes, but is not limited to, the size of the building, the number of employees, operation during other hours of the day or night, the use of additional land, and additional or more powerful equipment;
4. Rebuilt, altered, repaired or replaced after damage exceeding 75 percent of the fair sale value of the structure immediately prior to damage. A nonconforming mobile home may not be replaced after it is removed from the property.

B. Any building containing a nonconforming use is considered a principal structure. (See section 17.240.110.)

C. Any replacement of a preexisting manufactured home or mobile home with a new manufactured or mobile home shall be permitted in accordance with O.C.G.A § 36-66-7 et seq.

(Res. of 8-28-78, § 24(A), (B); Res. of 5-28-91; Code 1991, § 17.330.010; Res. of 2-27-03(1), § 1)

17.350.010. Authority of planning commission

The planning commission may authorize, under conditions prescribed herein, conditional uses and permitted uses expressly identified in a particular zoning district. However, the planning commission reserves full authority to deny any request for such a use or to impose conditions authorized on the use as it deems appropriate to protect the general health, safety, and welfare of the county and its citizens.

(Res. of 8-28-78, § 25(A); Res. of 7-10-89; Res. of 9-28-92; Code 1991, § 17.340.010; Res. of 2-27-03(1), § 1)

17.350.020. Review procedure.

A. The planning commission shall hold a public hearing on all applications for conditional uses and permitted uses and consider the merits of the applications.

B. After hearing testimony from all interested parties, the planning commission shall have 30 days to render its decision.

(Res. of 8-28-78, § 25(B); Res. of 7-10-89; Res. of 9-28-92; Code 1991, § 17.340.020; Res. of 2-27-03(1), § 1)

17.350.050. Review criteria.

A conditional use or permitted use may be granted when the planning commission finds from a preponderance of the evidence produced at the public hearing that the proposed use is suitable for the subject property considering the general lines of inquiry established under section 17.380.060.C.

(Res. of 8-28-78, § 25(E); Res. of 7-10-89; Res. of 9-28-92; Code 1991, § 17.340.050; Res. of 2-27-03(1), § 1)

Deleted: and zoning board of adjustment.

Deleted: or zoning board of adjustment

Deleted: or zoning board of adjustment

Deleted: or zoning board of adjustment

Deleted: or zoning board of adjustment

Deleted: or zoning board of adjustment

17.350.060. Burden of proof.

The applicant for a conditional use or a permitted use shall have the burden of proof, which shall include the presentation of evidence and the burden of persuasion of all questions of fact which are to be determined by the planning commission as authorized herein.

(Res. of 8-28-78, § 25(F); Res. of 7-10-89; Res. of 9-28-92; Code 1991, § 17.340.060; Res. of 2-27-03(1), § 1)

17.350.070. Conditions of approval.

The planning commission may place any reasonable conditions or stipulations upon any approved use as deemed necessary (such as hours of operation, parking, maximum building size, lot size, outside displays, signs, landscape and buffer improvements, screens, etc.) to further insure the orderly operation of the proposed use and its compatibility with the surrounding properties.

(Res. of 8-28-78, § 25(G); Res. of 7-10-89; Res. of 9-28-92; Code 1991, § 17.340.070; Res. of 2-27-03(1), § 1)

17.350.080. Reserved

17.350.090. Appeals to board of commissioners.

Any decision of the planning commission may be appealed to the board of commissioners of the county in accordance with chapter 17.370 hereof.

(Res. of 8-28-78, § 25(I); Res. of 7-10-89; Res. of 9-28-92; Code 1991, § 17.340.090; Res. of 2-27-03(1), § 1)

17.360.020. Appeals.

Any person or persons aggrieved by any decision of the building official or planning director may appeal said decision to the county's planning commissioner in accordance with chapter 17.370 hereof.

(Res. of 8-28-78, § 26(B); Res. of 7-10-89; Code 1991, § 17.350.020; Res. of 2-27-03(1), § 1)

CHAPTER 17.370. APPEALS OF ADMINISTRATIVE OFFICIALS AND DECISION-MAKING BODIES

Deleted: or zoning board of adjustment

Deleted: or zoning board of adjustment

Deleted: Expiration of approval.

Deleted: A. No application approved by the planning commission shall be effective for a period of longer than 12 months unless action is taken by the applicant to implement the use proposed in the application by obtaining the proper permit and/or license, and development plat approval, and proceeding with the building, occupancy or establishment of business within 12 months from the date of approval by the planning commission. For applications approved by the zoning board of adjustment, if no action is taken by the applicant to implement the purpose of the application by obtaining the proper permit and/or license and proceeding with the building occupancy or establishment of a business within six months from the date of approval by the zoning board of adjustment, said approval shall become null and void. ¶ B. Extensions may be considered by the planning commission not exceeding 180 days each upon written application without notice or hearing. ¶ (Res. of 8-28-78, § 25(H); Res. of 7-10-89; Res. of 9-28-92; Code 1991, § 17.340.080; Res. of 2-27-03(1), § 1)¶

Deleted: or the zoning board of adjustment

Deleted: zoning board of adjustment. A written notice of appeal shall be submitted to the enforcing officer directly involved within 30 days from the officer's decision. Costs of the appeal shall be established by the board at their discretion and may be changed from time to time as necessary

Deleted: board of

Deleted: s

Deleted: APPEALS

17.370.010. Right to appeal.

A. Any person aggrieved by the final decision rendered on any proposed amendment, any conditional use or use subject to the approval of the planning commission or any other zoning or quasi-judicial decision by any county official, department,board, or agency affected by any final order, requirement, or decision authorized in this ordinance shall have the right to have an appeal of the decision. Appeals of administrative officials shall be heard by the planning commission, and appeals of any decision-making body shall be heard by the board of commissioners.

B. A person is considered aggrieved for purposes of this section only if the person or their property was the subject of the action appealed from, or the person has a substantial interest in the action being appealed that is in danger of suffering special damage or injury not common to all property owners similarly situated.

(Res. of 8-28-78, § 29(A)(1); Res. of 2-22-88; Res. of 7-10-89; Code 1991, § 17.360.010; Res. of 2-27-03(1), § 1)

17.370.020. File of appeal.

In order to file an appeal, the appellant must submit a written notice of appeal within 30 calendar days of the decision to the planning commission office. The appellant must submit justification and reasons for the appeal. Such justification should make specific reference to such relevant analysis as listed in 17.370.030(C). The appeal fee must be paid at the time of filing said written notice of appeal. The planning director, upon receipt of the written notice of appeal and fee, shall notify the county administrator of the appeal and submit the notice and record of the application to the county administrator.

(Res. of 8-28-78, § 29(A)(2); Res. of 2-22-88; Res. of 7-10-89; Res. of 12-19-90; Code 1991, § 17.360.020; Res. of 2-27-03(1), § 1)

17.370.030. Hearing and decision.

A. The appropriate hearing body (either the planning commission or the board of commissioners) shall hold a public hearing to consider all appeals of decisions by administrative officials and decision-making bodies. The only active participants are the appellant, the original applicant (if other than the appellant), and the zoning official or other administrative official whose decision is being appealed. Participants in the

Deleted: In the event of a denial of a

Deleted: or zoning board of adjustment

Deleted: , the applicant

Deleted: before the board of commissioners of the county.

Deleted: B. . In the event of a grant of a proposed amendment, industrial use, variance, any conditional use or use subject to the approval of the planning commission or zoning board of adjustment or any other zoning decision, any affected person shall have the right to have an appeal of the decision before the board of commissioners of the county.

Deleted: Notice

Deleted: have

Deleted: five working

Deleted:

Deleted: criteria

Deleted: section 17.380.060.C

Deleted: set forth in chapter 17.30 shall

Deleted: De novo appeal

meeting may present testimony, produce documentary evidence, and may cross-examine witnesses provided by another participant. The board of commissioners may ask questions or seek clarification from any participant in the hearing, and may limit the time for the hearing as it deems necessary and appropriate provided that all participants are afforded equal time to present evidence.

B. Following the close of the hearing and following its consideration of all testimony, documentary evidence, and matters of record presented, the board of commissioners shall render its decision. The decision shall be made within a reasonable period of time, but in no event more than 30 days from the date of the close of the hearing.

C. In exercising its powers, the board of commissioners may reverse or affirm the decision in whole or in part, or may modify the order, requirement, decision, or determination appealed from. To that end, the hearing body has all of the powers of the administrative official or decision-making body from whom or from which the appeal was taken, and it may issue or direct the issuance of a permit or other approval, provided that all requirements imposed by all other applicable laws and ordinances are met. In no case shall the powers of the hearing body be construed to include authority to reclassify use zones. An appeal shall be reversed or the decision modified only upon an expressed finding by the hearing body that the action was based on an erroneous finding of a material fact, or that said action was arbitrary".

(Res. of 8-28-78, § 29(A)(3); Res. of 2-22-88; Res. of 7-10-89; Code 1991, § 17.360.030; Res. of 2-27-03(1), § 1)

17.370.040. Required public notice.

Notice to members of the public shall be provided in accordance with the provisions of this Title and O.C.G.A. 36-66-1 et seq."(Res. of 8-28-78, § 29(A)(5); Res. of 2-22-88; Res. of 7-10-89; Code 1991, § 17.360.040; Res. of 2-27-03(1), § 1)

17.370.050. Date of public hearing before board of commissioners.

The county administrator or other appropriate county official shall place an appeal on the agenda of the first public meeting of the appropriate hearing body of the county arising after the relevant notice provisions of sections 17.380.070 through 17.380.110 have been complied with.

(Res. of 8-28-78, § 29(A)(5); Res. of 2-22-88; Res. of 7-10-89; Code 1991, § 17.360.050; Res. of 2-27-03(1), § 1)

17.370.060. Payment of costs of appeal.

The appellant shall bear the costs of preparing the necessary documents as required by the county to properly appeal the matter before the hearing body, in addition to the appeal fee.

(Res. of 8-28-78, § 29(A)(6); Res. of 2-22-88; Res. of 7-10-89; Code 1991, § 17.360.060; Res. of 2-27-03(1), § 1)

17.370.070. Decision of appeal.

A. An appeal may be sustained (i.e.: where the decision is reversed) only upon a finding by the hearing body that the action subject to the appeal was based on an erroneous finding of a material fact or that the administrative official or decision-making body acted in an arbitrary manner.

B. Appeals of administrative officials shall be heard by the planning commission.

C. Appeals of any decision-making body shall be heard by the board of commissioners.

D. Appeals of board of commissioners shall be appealed in accordance with section 17.380.160."

Deleted: If an appeal of a conditional use, a use permitted subject to approval of the planning commission or an application requiring approval by the zoning board of adjustment is denied by the board of commissioners, then the same property may not again be considered for any zoning application and no application shall be filed until the expiration of at least six months immediately following the denial of the appeal and may not be considered for an application of the same type and no application shall be filed (conditional use, etc.) until the expiration of at least 12 months immediately following the denial of the appeal.

17.380.030. Initiation of proposed amendments.

These zoning regulations of the county, including the official zoning map, may be amended from time to time by the board of commissioners of the county. Official zoning map amendments may be proposed by the board of commissioners of the county, or the county planning commission, or an administrative official, or by any individual,

Deleted: A

Deleted: to the zoning regulations, including the official zoning map,

firm or organization or their duly appointed agent or attorney; provided, however, no amendment shall become effective unless it shall have been proposed by or have first been submitted to the county planning commission for review and recommendation. Application for uses subject to the approval of the county commission shall have first been submitted to the county planning commission for review and recommendation before consideration by the county commission. Text amendments to the zoning ordinances shall be proposed only by the board of commissioners of the county, or the county planning commission, or the appropriate administrative official.

(Res. of 2-22-88; Res. of 7-10-89; Code 1991, § 17.370.030; Res. of 2-27-03(1), § 1)

17.380.050. Submission requirements.

B. All applications for a change of zoning classification or use subject to approval of the county commission shall include:

1. A narrative statement identifying the existing and proposed use of the property and addressing each of the criteria set forth in section 17.380.060.C of this chapter.

17.380.060. Planning commission and Hall County Commission consideration and decision.

B. A. 1. The planning commission shall hold a public meeting on all zoning applications or applications for a use subject to approval of the county commission. The planning commission shall hold the required public meeting not less than 30 days, nor more than 60 days from the date of the filing of a complete and compliant zoning application. After hearing testimony from all interested parties, the planning commission shall have 30 days within which to make its decision to grant or deny the application. If the planning commission fails to make a decision within the specified period, it shall be deemed to have carried a recommendation of approval of the application.

17.380.070. Public hearing required; notice required.

A. The county planning commission, the county board of adjustment, and the county board of commissioners, when taking final action on all applications, shall provide for public hearings on the proposed actions. Public meetings related to recommendations made by the planning commission to the board of commissioners do not require notice provided herein. A notice of public hearings shall be published at least 30 days but not more than 45 days prior to said public hearings in a newspaper of general circulation within the territorial boundaries of the county.

Deleted:

Deleted: section [

Deleted:]

Deleted: hearing

Deleted: after appropriate public notice has been given as provided herein to consider and decide the merits of each application

Deleted: ¶
2. .

Deleted: hearing

Deleted: 16

Deleted: the

Deleted: ¶
B. .

Deleted: y

Deleted: denied

Deleted: the

Deleted: 15

B. The county will follow the additional notice and hearing requirements found in O.C.G.A. § 36-66-1 whenever so required by State law, including any of the following instances when required by State law:

1. County-initiated rezoning and/or text amendments to revise a zoning classification related to single-family residential uses of property so as to authorize multi-family uses of property pursuant to such classification or definitions, or to grant blanket permission, under certain or all circumstances, for property owners to deviate from the existing zoning requirements of a single-family residential zoning district;
2. Halfway houses, drug rehabilitation centers, or other facilities for the treatment of drug dependency; or
3. Annexations."

17.380.080. Public notice of hearing; contents.

C. If an application is being considered for a change of zoning for a specifically described tract or parcel of land (amendment to the zoning map), then the public notice shall, in addition to the requirements of sections 17.380.070 and 17.380.080.A, include the following information:

1. The location of the property; and
2. The present zoning classification; and
3. The proposed zoning classification of the property.

Deleted: the sole purpose

17.380.090. Public notice of hearing; posting/mailing.

A. **Posted notice**. All zoning map amendments initiated by a party other than the county planning commission or the county board of commissioners, and applications for uses subject to approval of the county commission, shall require a sign placed in a conspicuous location on the property which is the subject matter of the zoning application.

B. Mailed notice. Mailed notice shall be made via USPS at least 30 days but not more than 45 days before the date of the public hearing to the following parties:

a. Property owner notice. Mailed notice shall be made to the owner(s) of record. Mailing address for owner(s) shall be provided by the applicant with the filing of the zoning petition.

b. Applicant.

c. Appellant. If not one of the parties already identified as requiring notice, the appellant for any filed appeal shall receive mailed notice.

17.380.100. Public notice of hearing; sign information.

The public notice sign shall contain the same information described in section 17.380.080.

Deleted: A and the present and proposed zoning classification

17.380.110. Public notice of hearing; sign posting date.

The required public notice sign shall be posted not less than 30 but not more than 45 days prior to the date of the hearing.

Deleted: 15

(Res. of 8-28-78, § 30(B)(9); Res. of 2-22-88; Res. of 7-10-89; Code 1991, § 17.370.110; Res. of 2-27-03(1), § 1)

17.380.120. Public notice of hearing; applications initiated by county.

When an application is brought by or initiated by the board of commissioners of the county or an administrative official of the county, the only public notice required by these zoning regulations is newspaper advertisement as set forth in O.C.G.A. 36-66-1 et. Seq. and sections 17.380.070 and 17.380.080.

Deleted:

Deleted: or the county planning commission

17.380.130. Action by Board of Commissioners

Deleted: Board of commissioners' action.

A. The board of commissioners shall consider applications for uses subject to approval of the county commission and all zoning decisions of the planning commission or zoning board of adjustment including conditions of approval and any additional evidence that applicant wishes to present at a public hearing on the date advertised, at which time all interested parties and citizens shall have an opportunity to be heard and present evidence regarding the proposed amendment or use subject to approval of the county commission, or the appeal of the conditional use or use subject to approval of the planning commission or zoning board of adjustment or other zoning decisions.

B. The board of commissioners may place any reasonable conditions or stipulations upon any application for a use subject to approval of the county commission, a proposed amendment or the appeal of a conditional use or use subject to approval of the planning commission or zoning board of adjustment or other zoning decisions as deemed necessary (such as hours of operation, parking, maximum building size, lot size, outside displays, signs, screens, buffers, etc.) to further insure the orderly operation of proposed uses and their compatibility with the surrounding properties.

C. The board of commissioners, in making its decision on the proposed amendment, the use subject to approval of the county commission, or the appeal of a conditional use, or the use subject to approval of the planning commission or zoning board of adjustment or other zoning decisions, shall consider the general lines of inquiry established under section 17.380.060 and any other relevant factor submitted by the applicant.

D. The applicant/appellant shall have the burden of proof, which shall include the presentation of evidence and the burden of persuasion of each factor necessary to receive approval of the board of commissioners. Failure of the applicant/appellant to meet this burden shall result in a denial of the proposed amendment, the use subject to the approval of the county commission, or the appeal of a conditional use or the use subject to approval of the planning commission or zoning board of adjustment or other zoning decisions.

E. The board of commissioners' public hearing is to be held as follows:

1. The public hearing is to be held in conjunction with regular meetings of the board of commissioners, with published notice of time and place.

2. The hearing is conducted by the county attorney or other hearing officer designated by the board of commissioners.

3. The hearing officer introduces the proposed zoning amendments before the board of commissioners. Proposals are considered in order as listed in the published notice. The hearing officer describes each proposed zoning amendment and the party initiating the proposal. Staff is then called upon to report on the planning commission's recommendation and summarize its written report.

4. Persons both favoring and opposing the proposed amendment are provided an opportunity to address the board of commissioners. During this period:

    a. Each speaker must first state his name and address.

    b. Comments are accepted first from the party proposing the action and any other proponents of the action, followed by opponents of the action. The party proposing the action may then offer rebuttal.

    c. The hearing officer may place reasonable limits on the number of persons who may speak for or against the proposal, on the time allowed for each speaker, and on the total time allowed for comment. No less than ten minutes shall be permitted for all of those speaking in support of an amendment and no less than ten minutes shall be permitted for all those speaking against, unless such proponents or opponents take less time than the minimum allowed.

    d. Comments must pertain only to the merits of the proposed action, and must be directed to the board of commissioners. Comments are not allowed that may be construed as personal attacks

on any other speaker, or are irrelevant to the proposed action. Violators will be first cautioned and then prevented from making further comment.

e. Petitions, studies, letters, and other material should be submitted prior to the hearing, allowing ample time for study by the board of commissioners. Materials submitted at the hearing may or may not be accepted by the board, and if presented orally are subject to time limitations.

5. The board of commissioners may, if necessary, call on previous speakers for clarification, or may call for additional views, studies or information from any source considered necessary to making a sound decision. The board of commissioners may continue the hearing to a later date.

6. The decision rendered by the board of commissioners regarding the proposed amendment, the use subject to approval of the county commission, or the appeal of a conditional use or the use subject to approval of the planning commission or zoning board of adjustment or other zoning decisions shall be deemed to be the final action on the application.

7. No approval or denial of an amendment, use subject to approval of the county commission, an appeal of an administrative official or decision-making bod, the approval or denial of a use subject to approval of the planning commission or zoning board of adjustment, or other zoning or quasi-judicial decisions by the board of commissioners shall become effective unless said approval or denial is conducted at a public hearing.

Deleted: or the

Deleted: a conditional use

Deleted: or

Deleted: 8.

Deleted: . The approval of any application for a use subject to approval of the county commission shall be effective for a period of no longer than 12 months from the date of approval unless action is taken by the applicant to implement the use proposed in the application by obtaining the proper permit and/or license, and development plat approval, and proceeding with the building, occupancy or establishment of business.

Deleted: 9. . If a use subject to approval of the county commission or if a rezoning is denied, or if an appeal from the decision of the planning commission or zoning board of adjustment is denied by the board of commissioners, then the same property may not again be considered for any zoning application (rezoning, conditional use, variance, etc.) and no application shall be filed until the expiration of at least six months immediately following the date of the denial of the use or the denial of the appeal and may not be considered for an application of the same type and no application of the same type shall be filed until the expiration of at least six months immediately following the date of the denial of the use or the denial of the appeal.

Deleted: ¶

17.380.150. Successive applications.

If a use subject to approval of the county commission/planning commission or a rezoning is denied, or if an appeal from the decision of an administrative official, or the planning commission is denied by the board of commissioners, then the same property may not again be considered for any zoning application (rezoning, conditional use, variance, etc.) and no application shall be filed until the expiration of at least six months immediately following the date of the denial of the use/rezoning or the denial of the appeal and may not be considered for an application of the same type and no application of the same type shall be filed until the expiration of at least six months immediately following the date of the denial of the use /rezoning or the denial of the appeal.

17.380.160. Appeals of board of commission actions.

A. Any person with adequate standing to do so under Georgia law may seek review in the Superior Court of Hall County in accordance with the applicable procedures established by Georgia law.

B. The Director of Community Development and Infrastructure shall be authorized, without additional board or agency action, to approve or issue any form or certificate necessary to perfect any appeal petition for review of lower judicatory bodies, and shall be authorized, without additional board or agency action, to accept service or be served in behalf of any lower judicatory board or agency, during normal business hours, at the regular offices of the county.

C. Service of an appeal of any quasi-judicial decision rendered pursuant to this Title may be effected or accepted on behalf of the local governing authority, during normal business hours, at the regular offices of the county, by the County Attorney when so allowed by the County's Service of Process Resolution, otherwise said service may be effected or accepted on behalf of the local governing authority according to the requirements of O.C.G.A. § 9-11-4 (e).

17.380.170 Georgia Zoning Procedures Law.

The review and approval procedures of this Zoning Ordinance are intended to comply with the provisions of the Georgia Zoning Procedures Law, O.C.G.A. § 36-66-1 et seq., which is incorporated by reference in its entirety. If any provision of this Zoning Ordinance is in conflict with any provision of the Zoning Procedures Law or if this Zoning Ordinance fails to incorporate a provision required for the implementation of the Zoning Procedures Law, the Zoning Procedures Law controls. This does not apply to procedures that are more restrictive than those established by the Georgia Zoning Procedures Law.

Zoning Ordinance Amendments

Hall County Planning Commission

June 5,2023

Purpose of Proposed Amendments

Establish compliance with …

- HB 1405
- HB 916
- SB 213

And other minor clean-up…

- Remove references to Zoning Board of Adjustments
- Remove references to obsolete or unused process (special exceptions, conditional use exceptions)

HALL COUNTY
GEORGIA

Zoning Procedures Law (ZPL)

- Zoning Powers are enumerated by the State Constitution to municipal and county governments
- Does not regulate *how* municipal and county governments exercise powers
- *But*, it outlines required processes to be followed when exercising zoning powers
  - Defines which actions apply
  - Required notice
  - Required hearings
  - Appeals procedures
- Required to comply with ZPL + local ordinances for due process
- Recent bills amended statutes that require local action to comply

HALL COUNTY
GEORGIA

What is HB 1405?

- State amendment to Zoning Procedures Law
- Accomplishes four main objectives:
  1. Defines quasi-judicial decisions
  2. Outlines additional hearing and notice requirements for carrying out quasi-judicial decisions (previously only zoning decisions were addressed)
  3. Articulates appeals procedures
     - Zoning decisions – de novo review
     - Quasi-judicial decisions – appellate review (writ of certiorari) – see HB 916
  4. Stipulates additional hearing and public notice requirements for amendments (zoning decisions) related to multi-family uses permitted in single-family residential zoning districts
- Requires that local and county governments amend ordinances to reflect the updates

HALL COUNTY
GEORGIA

Definitions

- Defines “quasi-judicial officers, boards, or agencies” as those entities rendering decisions on variances, special administrative permits, special exceptions, conditional use permits, or other zoning decisions (Sec. 36-66-3(1.1))
- Defines “zoning decision” as a rezoning, text amendment, special use, and concurrent variances (Sec. 36-66-3(4)) – note this definition is not new
  - Incorporates “repeal” and “denial” of decisions in the definition of “zoning decision”
  - Incorporates variances concurrent with special uses of property and rezonings in the definition of “zoning decision”

- Ordinance
  - Set all notice and hearing requirements so both standards are met
  - Clarify conditional use as a zoning decision (by nature of review process)
- Practice
  - Ensure each type of case is being properly processed

HALL COUNTY
GEORGIA

Quasi-judicial Decisions Zoning Decisions

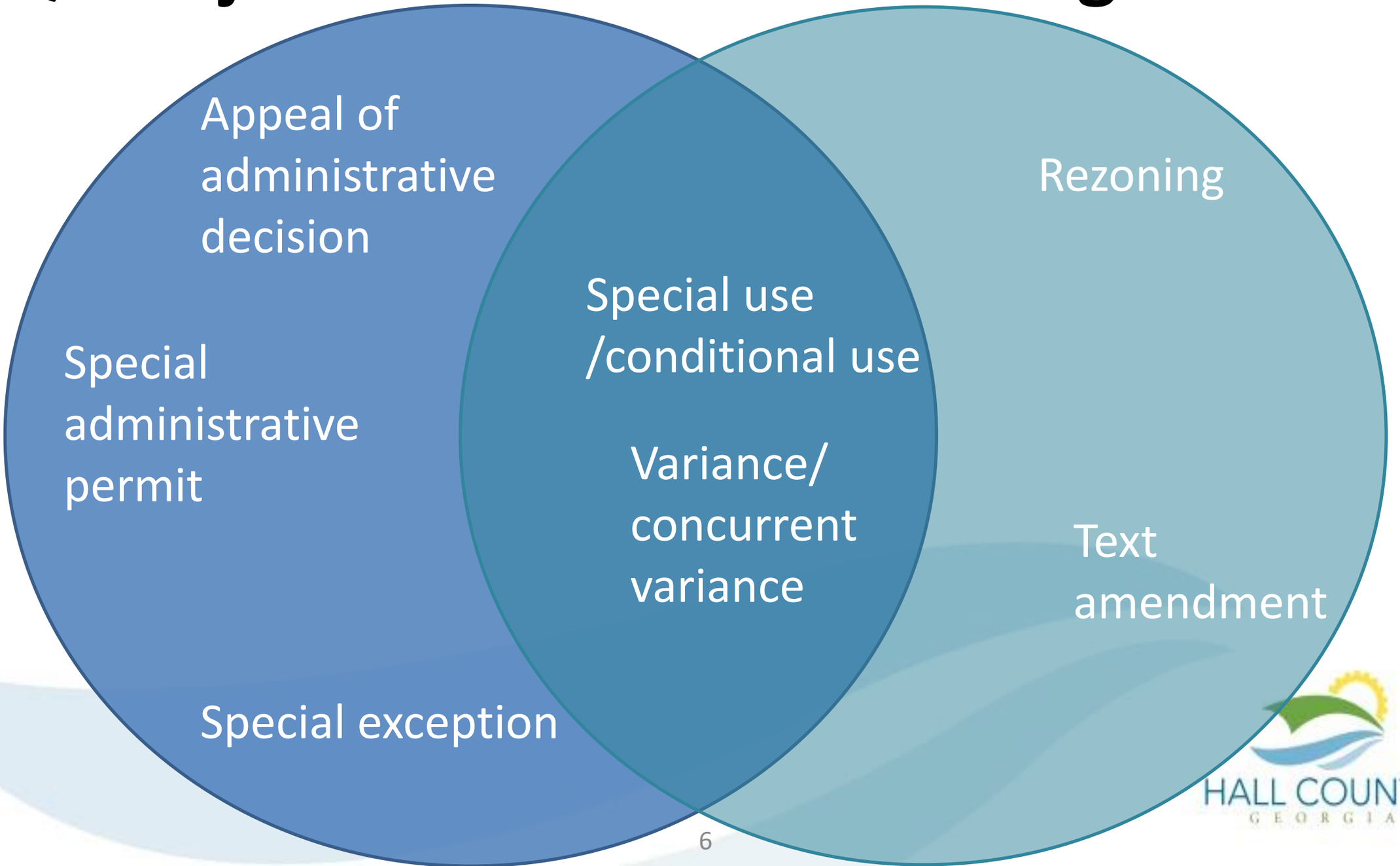

Quasi-judicial

(1.1) 'Quasi-judicial officers, boards, or agencies' means an officer, board, or agency appointed by a local government to exercise delegated, quasi-judicial zoning powers including hearing appeals of administrative decisions by such officers, boards, or agencies and hearing and rendering decisions on applications for variances, special administrative permits, special exceptions, conditional use permits, or other similar permits not enumerated herein as a zoning decision, pursuant to standards for the exercise of such quasi-judicial authority adopted by a local government.

(2) 'Territorial boundaries' means, in the case of counties, the unincorporated areas

HALL COUNTY
GEORGIA

Zoning Decision

(4) 'Zoning decision' means final legislative action by a local government which results in:

(A) The adoption or repeal of a zoning ordinance;

(B) The adoption of an amendment to a zoning ordinance which changes the text of the zoning ordinance;

(C) The adoption or denial of an amendment to a zoning ordinance ~~which rezones~~ to rezone property from one zoning classification to another;

(D) The adoption or denial of an amendment to a zoning ordinance by a municipal local government ~~which zones~~ to zone property to be annexed into the municipality; ~~or~~

(E) The grant or denial of a permit relating to a special use of property;

(F) The grant or denial of a variance or conditions concurrent and in conjunction with a decision pursuant to subparagraphs (C) or (E) of this paragraph.

HALL COUNTY
GEORGIA

Required Hearings

- Only one hearing combined required for text amendments, rezonings, special uses, and concurrent variances (or any combination thereof) (Sec. 36-66-4(a))
- One hearing per proposed action required for all quasi-judicial decisions (Sec. 36-66-4(g))

- Ordinance
  - No changes anticipated at this time
- Practice
  - Continue to vote on each decision individually

HALL COUNTY
GEORGIA

36-66-4.

(a) A local government taking action resulting in a zoning decision shall provide for a hearing on the proposed action. Where the proposed action includes any combination of zoning decisions under subparagraphs (C), (E), or (F) of paragraph (4) of Code Section 36-66-3 for the same property, only one hearing shall be required under this Code Section. At least 15 but not more than 45 days prior to the date of the hearing, the local government shall cause to be published within a newspaper of general circulation within the territorial boundaries of the local government a notice of the hearing. The notice shall state the time, place, and purpose of the hearing.

(4) 'Zoning decision' means final legislative action by a local government which results in:

(A) The adoption or repeal of a zoning ordinance;

(B) The adoption of an amendment to a zoning ordinance which changes the text of the zoning ordinance;

(C) The adoption or denial of an amendment to a zoning ordinance ~~which rezones~~ to rezone property from one zoning classification to another;

(D) The adoption or denial of an amendment to a zoning ordinance by a municipal local government ~~which zones~~ to zone property to be annexed into the municipality; ~~or~~

(E) The grant or denial of a permit relating to a special use of property;

(F) The grant or denial of a variance or conditions concurrent and in conjunction with a decision pursuant to subparagraphs (C) or (E) of this paragraph.

(g) A local government delegating decision-making power to a quasi-judicial officer, board, or agency shall provide for a hearing on each proposed action described in paragraph (1.1) of Code Section 36-66-3. Notice of such hearing shall be provided at least 30 days prior to the quasi-judicial hearing, with such notice being made as provided for in subsection (a) of this Code section and with additional notice being mailed to the owner of the property that is the subject of the proposed action.

(1.1) 'Quasi-judicial officers, boards, or agencies' means an officer, board, or agency appointed by a local government to exercise delegated, quasi-judicial zoning powers including hearing appeals of administrative decisions by such officers, boards, or agencies and hearing and rendering decisions on applications for variances, special administrative permits, special exceptions, conditional use permits, or other similar permits not enumerated herein as a zoning decision, pursuant to standards for the exercise of such quasi-judicial authority adopted by a local government.

(2) 'Territorial boundaries' means, in the case of counties, the unincorporated areas

HALL COUNTY
GEORGIA

Notice

- Quasi- judicial decisions (Sec. 36-66-4(g)):
  - Hearing required
  - 30-days notice prior to hearing
  - Requires written notification to **property owner** and newspaper ad
- Zoning decisions (Sec. 36-66-4(a) and (b)):
  - Hearing required
  - 15-45-days notice prior to hearing
  - Requires signs (rezonings only) and newspaper ad

- Ordinance
  - Set all notice requirements to 30 days minimum and 45 days maximum (regardless of decision type)
  - Identify property owner and newspaper as ad recipients
- Practice
  - Adjust 2023 calendar
  - Extend application period by 30 days
  - Extend appeals process to 30 days
  - Send letters to subject property owner

HALL COUNTY
GEORGIA

(g) A local government delegating decision-making power to a quasi-judicial officer, board, or agency shall provide for a hearing on each proposed action described in paragraph (1.1) of Code Section 36-66-3. Notice of such hearing shall be provided at least 30 days prior to the quasi-judicial hearing, with such notice being made as provided for in subsection (a) of this Code section and with additional notice being mailed to the owner of the property that is the subject of the proposed action.

36-66-4.

(a) A local government taking action resulting in a zoning decision shall provide for a hearing on the proposed action. Where the proposed action includes any combination of zoning decisions under subparagraphs (C), (E), or (F) of paragraph (4) of Code Section 36-66-3 for the same property, only one hearing shall be required under this Code Section. At least 15 but not more than 45 days prior to the date of the hearing, the local government shall cause to be published within a newspaper of general circulation within the territorial boundaries of the local government a notice of the hearing. The notice shall state the time, place, and purpose of the hearing.

HALL COUNTY
GEORGIA

Multi-Family Changes

- Text amendments that involve:
  - Allowing MF in a SFR district
  - Abolition of SFR classifications in the jurisdiction
  - When properties granted ability to deviate from existing zoning requirements in single-family residential zoning districts
- Does not apply to SFR uses being changed to MFR uses for <u>owner-initiated applications</u>
- (Sec. 36-66-4(h)(1), (2), and (3))
- Cases involving halfway houses, drug rehabilitation centers, or other facilities for the treatment of drug dependency; and annexations require additional process (note: these requirements are *not* new)

- Ordinance
  - Clearly define multi-family uses and districts
  - Distinguish multi-family uses from townhome uses in definitions
  - Adopt requirements reference only (include references for other noted uses)
- Practice
  - Reference the state code if a request meeting this standard is proposed as a **<u>county-initiated action</u>**

HALL COUNTY
GEORGIA

(h)(1) Notwithstanding any other provisions of this chapter to the contrary, when a proposed zoning decision relates to an amendment of the zoning ordinance to revise one or more zoning classifications or definitions relating to single-family residential uses of property so as to authorize multifamily uses of property pursuant to such classification or definitions, or to grant blanket permission, under certain or all circumstances, for property owners to deviate from the existing zoning requirements of a single-family residential zoning, such zoning decision must be adopted in the following manner:

(A) The zoning decision shall be adopted at two regular meetings of the local government making the zoning decision, during a period of not less than 21 days apart; and

(B) Prior to the first meeting provided for in subparagraph (A) of this paragraph, at least two public hearings shall be held on the proposed action. Such public hearings shall be held at least three months and not more than nine months prior to the date of

HALL COUNTY
GEORGIA

Multi-Family Changes (Notice)

- Post notice on each affected “premises.” If there are more than 500 parcels, posting is only required every 500 feet.
- Newspaper ad
  - Minimum of 15 days/not more than 45 days from hearing
  - Prominent notice of purpose (full description of intent of change)
  - 9 column inches
  - Not located in classified section
  - State that a copy of proposed ordinance is on file (to be furnished upon request at no cost)

- Ordinance
  - Clearly define multi-family uses and districts
  - Distinguish multi-family uses from townhome uses in definitions
  - Adopt requirements by reference only
- Practice
  - Reference the state code if a request meeting this standard is proposed as a county-initiated action

HALL COUNTY
GEORGIA

(i) Posting notice on each affected premises in the manner prescribed by subsection (b) of this Code section; provided, however, that when more than 500 parcels are affected, in which case posting notice is required every 500 feet in the affected area; and

(ii) Publishing in a newspaper of general circulation within the territorial boundaries of the local government a notice of each hearing at least 15 days and not more than 45 days prior to the date of the hearing.

Both the posted notice and the published notice shall include a prominent statement that the proposed zoning decision relates to or will authorize multifamily uses or give blanket permission to the property owner to deviate from the zoning requirements of a single-family residential zoning of property in classification previously relating to single-family residential uses. The published notice shall be at least nine column inches in size and shall not be located in the classified advertising section of the newspaper. The notice shall state that a copy of the proposed amendment is on file in the office of the clerk or the recording officer of the local government and in the office of the clerk of the superior court of the county of the legal situs of the local government for the purpose of examination and inspection by the public. The local government shall furnish anyone, upon written request, a copy of the proposed amendment, at no cost.

(2) The provisions of paragraph (1) of this subsection shall also apply to any zoning decisions that provide for the abolition of all single-family residential zoning classifications within the territorial boundaries of a local government or zoning decisions that result in the rezoning of all property zoned for single-family residential uses within the territorial boundaries of a local government to multifamily residential uses of property.

(3) This subsection shall not apply to zoning decisions for the rezoning of property from a single-family residential use of property to a multifamily residential use of property when the rezoning is initiated by the owner or authorized agent of the owner of such property.

HALL COUNTY
GEORGIA

Written Policies and Procedures

Quasi-judicial decisions

- Policies and procedures which are outlined in ZPL (and adopted locally) shall be incorporated into ordinance
- Incorporates requirements for designating hearing procedures, criteria for review, and <u>providing printed copies of procedures at quasi-judicial hearings (requirement already existed for zoning decisions)</u>
- (Sec. 36-66-5)

- Ordinance
  - No additional change necessary
- Practice
  - Provide printed copies of procedures at meetings

HALL COUNTY
GEORGIA

(b.1) In addition to policies and procedures required by subsection (a) of this Code section, each local government providing for a quasi-judicial officer's, board's, or agency's grant, denial, or review of a quasi-judicial matter may adopt specific standards and criteria governing the exercise of such quasi-judicial decision-making authority, and such standards shall include the factors by which the local government directs the evaluation of a quasi-judicial matter. Such standards shall be printed and copies thereof made available for distribution to the general public.

Appeals

- Quasi-judicial decisions – subject to appellate review – reviews only the record
- Zoning decisions – subject to de novo review that reviews the record and any new evidence; direct constitutional challenge regarding the validity of zoning
- Government to designate (by ordinance or resolution)
  - Officer of quasi-judicial board to receive service (at office during regular hours)
  - Elected official or designee for quasi-judicial appeals
- Appeal stays all actions
- (Sec. 36-66-5.1)

- Ordinance
  - Designate officer to accept appeals
- Practice
  - Process appeals accordingly

HALL COUNTY
GEORGIA

Effective Date

- No text amendment to the impacted sections may be adopted after July 1, 2022, unless adoption procedures comply with the aforementioned changes (Sec. 36-66-5(c))
- That said, no zoning or quasi-judicial decision prior to July 1, 2023 is rendered invalid or void because of failure to update ordinances (Sec. 36-66-2(a))
  - Therefore, any decision after July 1, 2023 not in compliance is rendered invalid or void

- Ordinance
  - Adopt by July 2023 – scheduled for June 21, 2023 County Commission meeting
- Practice
  - Implement changes immediately upon adoption

HALL COUNTY
GEORGIA

What is HB 916?

- State amendment
- Accomplishes two main objectives:

1. Repeals the writ of certiorari process
2. Replaces it with a petition for review process

- Ordinance
  - Reference state language in appeals sections
- Practice
  - Process appeals accordingly

HALL COUNTY
GEORGIA

What is SB 213?

- State amendment to Zoning Procedures Law
- Accomplishes two main objectives:
  1. Outlines definitions of manufactured housing and similar types
  2. "To prohibit local governments from preventing the continuance of lawful nonconforming use of property when a preexisting manufactured home or mobile home is replaced with another such home"
- That means an existing manufactured home has to be allowed to be replaced ***and*** does not have to meet use standards, setbacks, architectural requirements, etc.

- Ordinance
  - Reference state language in nonconforming section related to manufactured homes
- Practice
  - Develop review process
  - Train Permitting staff

HALL COUNTY
GEORGIA

QUESTIONS/FURTHER DISCUSSION

STATE OF GEORGIA

COUNTY OF HALL

A RESOLUTION TO AMEND THE CODE OF ORDINANCES OF HALL COUNTY WITH REGARD TO TITLE 17 ZONING REGULATIONS

WHEREAS, Hall County has developed comprehensive regulations governing zoning and development in the County found in Title 17 of the Official Code of Hall County, Georgia; and

WHEREAS, effective July 1, 2022 the Georgia General Assembly enacted House Bill 1405, which comprehensively amended the Georgia Zoning Procedures Law; and

WHEREAS, the enactment of HB 1405 requires the review and revision of certain provisions of Title 17 of the Hall County Code where said provisions are impacted by the newly amended Georgia Zoning Procedures Law; and

WHEREAS, the Hall County Board of Commissioners wishes to amend Title 17 of the Hall County Code so as to ensure that the County remains fully compliant with the procedural requirements found in the Georgia Zoning Procedures Law; and

WHEREAS, the Hall County Board of Commissioners also wishes to remove various references within Title 17 of the Hall County Code to the "zoning board of adjustment" because said board no longer carries out any duties in Hall County, Georgia; and

WHEREAS, the County's Board of Commissioners believes that these changes to its Title 17 zoning and development regulations as described herein are in the best interests of residents and businesses of Hall County, Georgia, and would promote the public health, safety, and general welfare of such residents and businesses.

NOW, THEREFORE, the Board of Commissioners does hereby amend The Official Code of Hall County, Georgia as follows:

1.

Section 17.10.010 (Zoning regulations adopted; authority) is hereby amended by deleting Section17.10.010 in its entirety and inserting in lieu thereof a new Section 17.10.010 which provides as follows:

"**17.10.010. – Zoning regulations adopted; authority.**

The board of county commissioners for Hall County, Georgia, as authorized by article IX, section IV, paragraph II of the Constitution of the State of Georgia, does hereby create a planning commission known as the Hall County Planning Commission, and does hereby adopt zoning regulations for the following purposes: to define certain words used herein; to create zone boundaries; to regulate the locations of trades, professions, businesses, industries, apartment houses, and residences; to define the area of lots; to fix the location and size of yards and the alignment of buildings; to establish setback lines; to provide for nonconforming uses; to provide for the administration and enforcement thereof together with penalties for the violation of its provisions; to adopt a map or maps of any section or sections thereof for zoning purposes of the unincorporated areas of Hall County; to authorize variances and conditional uses; and to provide for court review."

2.

Chapter 17.20 (Definitions) is hereby amended by inserting new Sections 17.20.1061 and 17.20.1062 which provide as follows:

"**17.20.1061. Special exception.**

The term "special exception" when used in Title 17 shall refer to a variance, and shall be defined in the same manner as the term "variance" is defined herein.

17.20.1062. Special use.

The term "special use" when used in Title 17 shall refer to a conditional use, and shall be defined in the same manner as the term "conditional use" is defined herein."

3.

Section 17.240.110 (Lot density exceptions) is hereby amended by deleting Section 17.240.110 in its entirety and inserting in lieu thereof a new Section 17.240.110 which provides as follows:

"**17.240.110. – Lot density exceptions.**

Residential zones. In all residential zoning districts except planned development districts, only one principal structure and its customary accessory buildings, including agricultural buildings, may be erected on any parcel recorded as a separate lot or tract with the clerk of superior court unless otherwise specifically permitted by either:

Approval or a site plan for multi-family development, in zones permitting such uses, by the Planning Commission;

Approval of a caretaker or hardship variance by the Planning Commission.

Non-residential zones. In all other zoning districts except planned development districts, only one principal structure and its customary accessory buildings for each 15,000 square feet of land area may be erected on any parcel. A minimum of 20 percent of the site must be retained as open space. That open-space area must be maintained as either a natural or landscaped area.

Nonconforming uses. Any building containing a nonconforming use is considered a principal structure."

4.

Section 17.340.010 (C) (Criteria for continuation of nonconforming use) is hereby amended by deleting Section 17.340.010 (C) in its entirety and inserting in lieu thereof a new Section 17.340.010 (C) which provides as follows:

"17.340.010. Criteria for continuation of nonconforming use.

C. Any replacement of a preexisting manufactured home or mobile home with a manufactured or mobile home shall be permitted in accordance with O.C.G.A § 36-66-7 et seq."

5.

Section 17.350.010 (Authority of planning commission and zoning board of adjustment) is hereby amended by deleting Section 17.350.010 in its entirety and inserting in lieu thereof a new Section 17.350.010 which provides as follows:

"**17.350.010. Authority of planning commission.**

The planning commission may authorize, under conditions prescribed herein, conditional uses and permitted uses expressly identified in a particular zoning district. However, the planning commission reserves full authority to deny any request for such a use or to impose conditions authorized on the use as it deems appropriate to protect the general health, safety, and welfare of the county and its citizens."

6.

Section 17.350.020 (Review procedure) is hereby amended by deleting Section 17.350.020 in its entirety and inserting in lieu thereof a new Section 17.350.020 which provides as follows:

"**17.350.020. Review procedure.**

A. The planning commission shall hold a public hearing on all applications for conditional uses and permitted uses and consider the merits of the applications.

B. After hearing testimony from all interested parties, the planning commission shall have 30 days to render its decision."

7.

Section 17.350.050 (Review criteria) is hereby amended by deleting Section 17.350.050 in its entirety and inserting in lieu thereof a new Section 17.350.050 which provides as follows:

"**17.350.050. Review criteria.**

A conditional use or permitted use may be granted when the planning commission finds from a preponderance of the evidence produced at the public hearing that the proposed use is suitable for the subject property considering the general lines of inquiry established under Section 17.380.060 (C)."

8.

Section 17.350.060 (Burden of proof) is hereby amended by deleting Section 17.350.060 in its entirety and inserting in lieu thereof a new Section 17.350.060 which provides as follows:

"**17.350.060. Burden of proof.**

The applicant for a conditional use or a permitted use shall have the burden of proof, which shall include the presentation of evidence and the burden of persuasion of all questions of fact which are to be determined by the planning commission as authorized herein."

9.

Section 17.350.070 (Conditions of approval) is hereby amended by deleting Section 17.350.070 in its entirety and inserting in lieu thereof a new Section 17.350.070 which provides as follows:

"**17.350.070. Conditions of approval.**

The planning commission may place any reasonable conditions or stipulations upon any approved use as deemed necessary (such as hours of operation, parking, maximum building size, lot size, outside displays, signs, landscape and buffer improvements, screens, etc.) to further insure the orderly operation of the proposed use and its compatibility with the surrounding properties."

10.

Section 17.350.080 (Expiration of approval) is hereby amended by deleting Section 17.350.080 in its entirety and inserting in lieu thereof the word "Reserved".

11.

Section 17.350.090 (Appeals to board of commissioners) is hereby amended by deleting Section 17.350.090 in its entirety and inserting in lieu thereof a new Section 17.350.090 which provides as follows:

"**17.350.090. Appeals to board of commissioners.**

Any decision of the planning commission may be appealed to the board of commissioners of the county in accordance with chapter 17.370 hereof."

13.

Section 17.360.020 (Appeals) is hereby amended by deleting Section 17.360.020 in its entirety and inserting in lieu thereof a new Section 17.360.020 which provides as follows:

"**17.360.020. Appeals.**

Any person or persons aggrieved by any decision of the building official or planning director may appeal said decision to the county's planning commission in accordance with chapter 17.370 hereof."

14.

The heading to Chapter 17.370 shall be changed from "**APPEALS**" to "**APPEALS OF ADMINISTRATIVE OFFICIALS AND DECISION-MAKING BODIES**".

15.

Section 17.370.010 (Right to appeal) is hereby amended by deleting Section 17.370.010 in its entirety and inserting in lieu thereof a new Section 17.370.010 which provides as follows:

"**17.370.010. Right to appeal.**

A. Any person aggrieved by the final decision rendered on any proposed amendment, any conditional use, or use subject to the approval of the planning commission, or any other zoning or quasi-judicial decision by any county official, department, board, or agency affected by any final order, requirement, or decision authorized in this ordinance shall have the right to an appeal of the decision. Appeals of administrative officials shall be heard by the planning commission, and appeals of any decision-making body shall be heard by the board of commissioners.

B. A person is considered aggrieved for purposes of this section only if the person or their property was the subject of the action appealed from, or the person has a substantial interest in the action being appealed that is in danger of suffering special damage or injury not common to all property owners similarly situated."

16.

Section 17.370.020 (Notice of appeal) is hereby amended by deleting Section 17.370.020 in its entirety and inserting in lieu thereof a new Section 17.370.020 which provides as follows:

"**17.370.020. Filing of Appeal.**

In order to file an appeal, the appellant must submit a written notice of appeal within 30 calendar days of the decision to the planning commission office. The appellant must submit justification and reasons for the appeal. Such justification should make specific reference to such relevant analysis as listed in section 17.370.030(C). The appeal fee must be paid at the time of filing said written notice of appeal. The planning director, upon receipt of the written notice of appeal and fee, shall notify the county administrator of the appeal and submit the notice and record of the application to the county administrator."

17.

Section 17.370.030 (De novo appeal) is hereby amended by deleting Section 17.370.030 in its entirety and inserting in lieu thereof a new Section 17.370.030 (Hearing and decision) which provides as follows:

"**17.370.030. Hearing and decision.**

A. The appropriate hearing body (either the planning commission or the board of commissioners) shall hold a public hearing to consider all appeals of decisions by administrative officials and decision-making bodies. The only active participants are the appellant, the original applicant (if other than the appellant), and the zoning official or other administrative official whose decision is being appealed. Participants in the meeting may present testimony, produce documentary evidence, and may cross-examine witnesses provided by another participant. The board of commissioners may ask questions or seek

clarification from any participant in the hearing, and may limit the time for the hearing as it deems necessary and appropriate provided that all participants are afforded equal time to present evidence.

B. Following the close of the hearing and following its consideration of all testimony, documentary evidence, and matters of record presented, the board of commissioners shall render its decision. The decision shall be made within a reasonable period of time, but in no event more than 30 days from the date of the close of the hearing.

C. In exercising its powers, the board of commissioners may reverse or affirm the decision in whole or in part, or may modify the order, requirement, decision, or determination appealed from. To that end, the hearing body has all of the powers of the administrative official or decision-making body from whom or from which the appeal was taken, and it may issue or direct the issuance of a permit or other approval, provided that all requirements imposed by all other applicable laws and ordinances are met. In no case shall the powers of the hearing body be construed to include authority to reclassify use zones. An appeal shall be reversed or the decision modified only upon an expressed finding by the hearing body that the action was based on an erroneous finding of a material fact, or that said action was arbitrary".

18.

Section 17.370.040 (Required public notice) is hereby amended by deleting Section 17.370.040 in its entirety and inserting in lieu thereof a new Section 17.370.040 which provides as follows:

"**17.370.040. Required public notice.**

Notice to members of the public shall be provided in accordance with the provisions of this Title and O.C.G.A. 36-66-1 et seq."

19.

Section 17.370.050 (Date of public hearing before board of commissioners) is hereby amended by deleting Section 17.370.050 in its entirety and inserting in lieu thereof a new Section 17.370.050 (Date of public hearing) which provides as follows:

"**17.370.050. Date of public hearing.**

The county administrator or other appropriate county official shall place an appeal on the agenda of the first public meeting of the appropriate hearing body of the county arising after the relevant notice provisions of sections 17.380.070 through 17.380.110 have been complied with."

20.

Section 17.370.060 (Payment of costs of appeal; decision by board of commissioners) is hereby amended by deleting Section 17.370.060 in its entirety and inserting in lieu thereof a new Section 17.370.060 (Payment of costs of appeal) which provides as follows:

"17.370.060. Payment of costs of appeal.

The appellant shall bear the costs of preparing the necessary documents as required by the county to properly appeal the matter before the hearing body, in addition to the appeal fee."

21.

Section 17.370.070 (Denial of appeal) is hereby amended by deleting Section 17.370.070 in its entirety and inserting in lieu thereof a new Section 17.370.070 (Decision of appeal) which provides as follows:

"**17.370.070. Decision of appeal.**

A. An appeal may be sustained (i.e.: where the decision is reversed) only upon a finding by the hearing body that the action subject to the appeal was based on an erroneous finding of a material fact or that the administrative official or decision-making body acted in an arbitrary manner.

B. Appeals of administrative officials shall be heard by the planning commission.

C. Appeals of any decision-making body shall be heard by the board of commissioners.

D. Appeals of board of commissioners shall be appealed in accordance with section 17.380.160."

22.

Section 17.380.030 (Initiation of proposed amendments) is hereby amended by deleting Section 17.380.030 in its entirety and inserting in lieu thereof a new Section 17.380.030 which provides as follows:

"**17.380.030. Initiation of proposed amendments.**

These zoning regulations of the county, including the official zoning map, may be amended from time to time by the board of commissioners of the county. Official zoning map amendments may be proposed by the board of commissioners of the county, or by the county planning commission, or an administrative official, or by any individual, firm, or organization or their duly appointed agent or attorney; provided, however, no amendment shall become effective unless it shall have been proposed by or have first been submitted to the county planning commission for

review and recommendation. Application for uses subject to the approval of the county commission shall have first been submitted to the county planning commission for review and recommendation before consideration by the county commission. Text amendments to the zoning ordinances shall be proposed only by the board of commissioners of the county, or the county planning commission, or the appropriate administrative official."

23.

Subsection 17.380.050 (B) (1) (Submission requirements) is hereby amended by deleting Subsection 17.380.050 (B) (1) in its entirety and inserting in lieu thereof a new Subsection 17.380.050 which provides as follows:

17.380.050. Submission requirements.

…

B. …

"1. A narrative statement identifying the existing and proposed use of the property and addressing each of the criteria set forth in section 17.380.060 C of this chapter."

24.

Subsections 17.380.060 (A) and (B) (Planning commission and Hall County Commission consideration and decision) are hereby amended by deleting Subsections 17.380.060 (A) and (B) in their entirety and inserting in lieu thereof new Subsections 17.380.060 (A) and (B) which provide as follows:

17.380.060. Planning Commission and Hall County Commission consideration and decision.

A. “The planning commission shall hold a public meeting on all zoning applications or applications for a use subject to approval of the county commission. The planning commission shall hold the required public meeting not less than 30 days, nor more than 60 days, from the date of the filing of a complete and compliant zoning application.

B. After hearing testimony from all interested parties, the planning commission shall have 30 days within which to make its decision to grant or deny the application. If the planning commission fails to make a decision within the specified period, it shall be deemed to have carried a recommendation of approval of the application.”

25.

Section 17.380.070 (Public hearing required; notice required) is hereby amended by deleting Section 17.380.070 in its entirety and inserting in lieu thereof a new Section 17.380.070 which provides as follows:

“**17.380.070. Public hearing required; notice required.**

A. The county planning commission and the county board of commissioners, when taking final action on all applications, shall provide for public hearings on the proposed actions. Public meetings related to recommendations made by the planning commission to the board of commissioners do not require notice provided herein. A notice of public hearings shall be published at least 30 days but not more than 45 days prior to said public hearings in a newspaper of general circulation within the territorial boundaries of the county.

B. The county will follow the additional notice and hearing requirements found in O.C.G.A. § 36-66-1 whenever so required by State law, including any of the following instances when required by State law:

1. County-initiated rezoning and/or text amendments to revise a zoning classification related to single-family residential uses of property so as to authorize multi-family uses of property pursuant to such classification or definitions, or to grant blanket permission, under certain or all circumstances, for property owners to deviate from the existing zoning requirements of a single-family residential zoning district;
2. Halfway houses, drug rehabilitation centers, or other facilities for the treatment of drug dependency; or
3. Annexations."

26.

Section 17.380.080 (C) (Public notice of hearing; posting) is hereby amended by deleting Section 17.380.080 in its entirety and inserting in lieu thereof a new Section 17.380.080 which provides as follows:

17.380.080. Public notice of hearing; contents.

…

C. "If an application is being considered for a change of zoning for a specifically described tract or parcel of land (amendment to the zoning map), then the public notice shall, in addition to the requirements of section 17.380.070 and subsection (A) above, include the following information:
   1. The location of the property; and
   2. The present zoning classification; and
   3. The proposed zoning classification of the property."

27.

Section 17.380.090 (Public notice of hearing; posting) is hereby amended by deleting Section 17.380.070 in its entirety and inserting in lieu thereof a new Section 17.380.070 (Public notice of hearing; posting/mailing) which provides as follows:

"**17.380.090. Public notice of hearing; posting/mailing.**

A. Posted notice. All zoning map amendments initiated by a party other than the county planning commission or the county board of commissioners, and applications for uses subject to approval of the county commission, shall require a sign placed in a conspicuous location on the property which is the subject matter of the zoning application.

B. Mailed notice. Mailed notice shall be made via U.S. Postal Service mail at least 30 days but not more than 45 days before the date of the public hearing to the following parties:

1. Property owner notice. Mailed notice shall be made to the property owner(s) of record. The applicant shall provide the mailing address for property owner(s) with the filing of the zoning petition.
2. Applicant.
3. Appellant for any filed appeal shall also receive mailed notice if not one of the parties already identified as requiring notice."

28.

Section 17.380.100 (Public notice of hearing; sign information) is hereby amended by deleting Section 17.380.100 in its entirety and inserting in lieu thereof a new Section 17.380.100 which provides as follows:

"**17.380.100. Public notice of hearing; sign information.**

The public notice sign shall contain the same information described in section 17.380.080."

29.

Section 17.380.110 (Public notice of hearing; sign posting date) is hereby amended by deleting Section 17.380.110 in its entirety and inserting in lieu thereof a new Section 17.380.110 which provides as follows:

"**17.380.110. Public notice of hearing; sign posting date.**

The required public notice sign shall be posted not less than 30 but not more than 45 days prior to the date of the hearing."

30.

Section 17.380.120 (Public notice of hearing; applications initiated by county) is hereby amended by deleting Section 17.380.120 in its entirety and inserting in lieu thereof a new Section 17.380.120 which provides as follows:

"**17.380.120. Public notice of hearing; applications initiated by county.**

When an application is brought by or initiated by the board of commissioners of the county or by an administrative official of the county, the only public notice required by these zoning regulations is newspaper advertisement as set forth in O.C.G.A. § 36-66-1 et seq. and sections 17.380.070 and 17.380.080."

31.

Subsections 17.380.130 (E) (7), (8), and (9) (Board of commissioners' action) are hereby amended by deleting Subsections 17.380.130 (E) (7), (8), and (9) in their entirety and inserting in lieu thereof a new Subsection 17.380.130 (E) (7) which provides as follows:

17.380.130. Action by Board of Commissioners

…

(E) The board of commissioners' public hearing is to be held as follows (or the planning commission, where authorized by this chapter as the final decision-making body):

…

7. No approval or denial of an amendment, use subject to approval of the county commission, appeal of an administrative official or decision-making body, approval or denial of a use subject to approval of the planning commission, or other zoning or quasi-judicial decision by the board of commissioners shall become effective unless said approval or denial is determined after a public hearing."

32.

Chapter 17.380 (Amendments) is hereby further amended by inserting new sections 17.380.150, 17.380.160, and 17.380.170 which provide as follows:

"**17.380.150. Successive applications.**

If a use subject to approval of the county commission/planning commission or a rezoning is denied, or if an appeal from the decision of an administrative official or the planning commission is affirmed by the board of commissioners, then the same property may not again be considered for any zoning application (rezoning, conditional use, variance, etc.) and no such application shall be filed until the expiration of at least six months immediately following the date of the denial of the use/rezoning or the denial of the appeal and may not be considered for an application of the same type and no such application of the same type shall be filed until the expiration of at least six months immediately following the date of the denial of the use/rezoning or the denial of the appeal.

17.380.160. Appeals of board of commission actions.

A. Any person with adequate standing to do so under Georgia law may seek review in the Superior Court of Hall County in accordance with the applicable procedures established by Georgia law.

B. The Director of Community Development and Infrastructure shall be authorized, without additional board or agency action, to approve or issue any form or certificate necessary to perfect any appeal petition for review of lower judicatory bodies, and shall be authorized, without additional board or agency action, to accept service or be served in behalf of any lower judicatory board or agency, during normal business hours, at the regular offices of the county.

C. Service of an appeal of any quasi-judicial decision rendered pursuant to this Title may be effected or accepted on behalf of the local governing authority, during normal business hours, at the regular offices of the county, by the County Attorney when so allowed by the County's Service of Process Resolution, otherwise said service may be effected or accepted on behalf of the local governing authority according to the requirements of O.C.G.A. § 9-11-4 (e).

17.380.170. Georgia Zoning Procedures Law.

The review and approval procedures of this Zoning Ordinance are intended to comply with the provisions of the Georgia Zoning Procedures Law (O.C.G.A. § 36-66-1 et seq.), which is incorporated by reference in its entirety. If any provision of this Zoning Ordinance is in conflict with any provision of the Zoning Procedures Law or if this Zoning Ordinance fails to incorporate a provision required for the implementation of the Zoning Procedures Law, the Zoning Procedures Law controls."

33.

The remaining provisions of Title 17 (Zoning Regulations) of the Hall County Code of Ordinances shall remain as they were, unchanged by this amendment.

SO RESOLVED, this the _____ day of June, 2023.

HALL COUNTY BOARD OF COMMISSIONERS

By: _____
Richard Higgins, Chairman

ATTEST:

_____ (SEAL)
Jennifer Rivera, County Clerk

APPROVED AS TO FORM:

_____
William J. Linkous III
County Attorney

AGENDA ITEM

Other Business - Planning and Development

REPORT TO: **Work Session (07/10/23)**

REPORT TO: **Voting Meeting (07/13/23)**

ITEM NO: 361/2023

SUBJECT: Public Hearing to change the name of a segment of road on the official Hall County road map from Deaton Creek Parkway to Deaton Way; being a ±0.096 mile section between Friendship Road and Thompsons Mill Road. Commission District 1.

Meetings:

Work Session Date: 07/10/23 **Voting Meeting Date:** 07/13/23

Executive Summary:

Presenter: RD

Recommendation:
Approval.

Purpose of Request:
Public Hearing to change the name of a segment of road on the official Hall County road map from Deaton Creek Parkway to Deaton Way; being a ±0.096 mile section between Friendship Road and Thompsons Mill Road. Commission District 1.

History:

Facts and Issues:

Options:

Funding Requested	$ 0.00
Are funds within current budget?	No
Source of Funds	
Does the action involve a Resolution, Ordinance, Contract, Agreement, etc.?	No
Has it been reviewed by the County Attorney?	Yes
Is there a deadline for this item?	

Approvals:

Submit	Approve	Attorney	Administration
AD	RD	WLI	CR

Clerk
JR

Attachments:
Board Memo
Application
Maps
Deed
Legal Description

HALL COUNTY
GEORGIA

POST OFFICE DRAWER 1435

GAINESVILLE, GA 30503

t: 770.531.6809 | f: 770.531.3902

DIRECTOR
Srikanth Yamala

PLANNING AND DEVELOPMENT
DIRECTOR
Randi Doveton

Hall County Government

COMMUNITY DEVELOPMENT AND INFRASTRUCTURE
PLANNING AND DEVELOPMENT

To: Richard Higgins, Chairman
Kathy Cooper, District 1 Commissioner
Billy Powell, District 2 Commissioner
Gregg Poole, District 3 Commissioner
Jeff Stowe, District 4 Commissioner

From: Randi Doveton, Director of Planning & Development

Date: June 19, 2023

Subject: **Deaton Creek Parkway | Change a Segment of a Road Name |** on the official Hall County road map from Deaton Creek Parkway to Deaton Way; being a ±0.096 mile section between Friendship Road and Thompsons Mill Road **| Hall County Public Works Staff, applicant.**

The request before you is the request of the Public Works Staff to change a segment of a road name. This item is located within Commission District 1.

A segment of the road "Deaton Creek Parkway" is being brought into Hall County Road Maintenance. **This road extends beyond the subdivision, Deaton Creek, to the other side of Friendship Road connecting to Thompsons Mill Road.**

Public Works is requesting a proposed road name change for this segment to: **Deaton Way**, in order to distinguish between this segment of road and what is seen in the interior of the subdivision Deaton Creek. There are no properties off of this section that will need to be re-addressed.

At their June 5, 2023 meeting, the Hall County Planning Commission voted to recommend approval **(3-0, Sosebee & Varner absent)**.

There were **no public comments** submitted in advance of the Planning Commission meeting and **no one spoke during the public hearing.**

There have been no changes to the request since the Planning Commission took action.

Road Name Change Application
Hall County, Georgia

HALL COUNTY
GEORGIA
We have it all in Hall

Current name as shown on the Official County Road Map: segment of Deaton Creek Parkway

Road Status: County Maintained being brought into maintenance Non-County Maintained _____

Requested New Road Name: Deaton Way

Located off: Between Friendship & Thompsons Mill Road No. of Residences on Road 0

Reason for Name Change: Distinguish between the "Deaton Creek Parkway", that is in the interior of the subdivision Deaton Creek and this road segment

Contact Person: Public Works Staff Phone Number: 770-531-6800

Mail Address: PO Box 1435, Gainesville, GA 30503

Signature and Mail Address of Property Owners Requesting the Road Name Change

Name	Address

Return completed form to:

Hall County Planning Dept., P O Box 1435, Gainesville, GA 30503, 2875 Browns Bridge Rd., 770-531-6809

HALL COUNTY

We have it all in Hall

HALL COUNTY

PETITION FOR ACCEPTANCE OF A ROAD INTO THE SYSTEM

We, the property owner(s) listed below, presently own land that abuts Deaton Creek Parkway respectfully request that Deaton Creek Parkway be accepted into The Hall County Road System as follows:

A section beginning at the intersection with Thompson Mill Road and extending Approximately 300 LF in a northern direction to the existing Friendship Road.

We are making this request for the following reasons:

When Friendship Road was opened to the public this section of Deaton Creek Parkway was opened to the public for public use; however, it was not transferred to the Hall County Road System. This petition will support transfer of the above-described section of Deaton Creek Parkway to the Hall County Road System.

We certify that we represent all property owners which abut and have access to this section of Deaton Creek Parkway.

Name (Printed)	Signature	Address	Phone #
VDC Development Group LLC	[signature] Manager	5800 Thompson Mill Rd Flowery Branch, GA 30548	770-945-0810

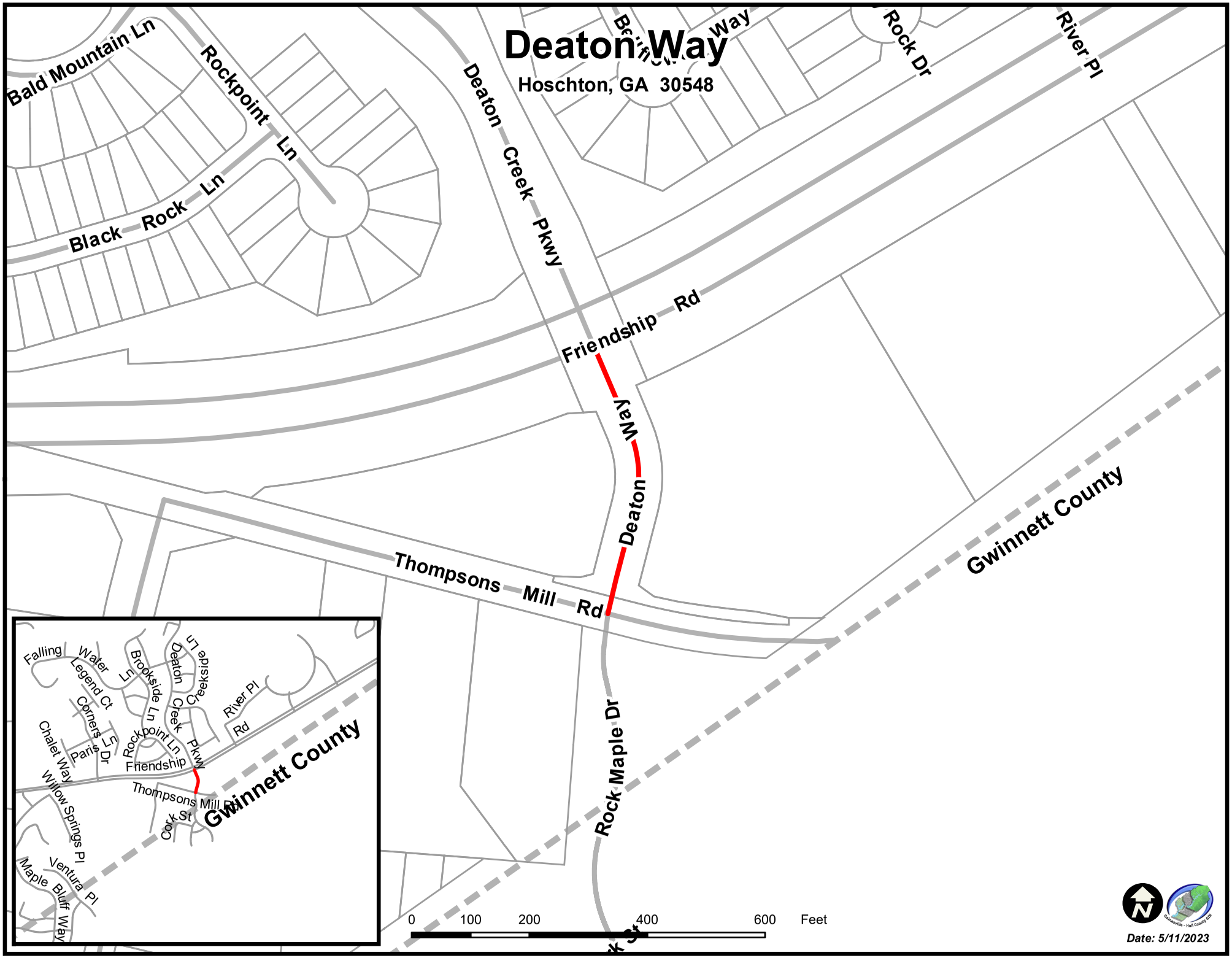
Deaton Way
Hoschton, GA 30548
Bald Mountain Ln
Rockpoint Ln
Black Rock Ln
Deaton Creek Pkwy
Rock Dr
River Pl
Friendship Rd
Deaton Way
Thompsons Mill Rd
Gwinnett County
Rock Maple Dr
Falling Water Legend Ct
Brookside Ln
Deaton Creek Pkwy
Creekside Ln
River Pl
Rd
Corners Ln
Paris Dr
Chalet Way
Rockpoint Ln
Friendship
Thompsons Mill Rd
Cork St
Willow Springs Pl
Ventura Pl
Maple Bluff Way
0
100
200
400
600
Feet
Date: 5/11/2023

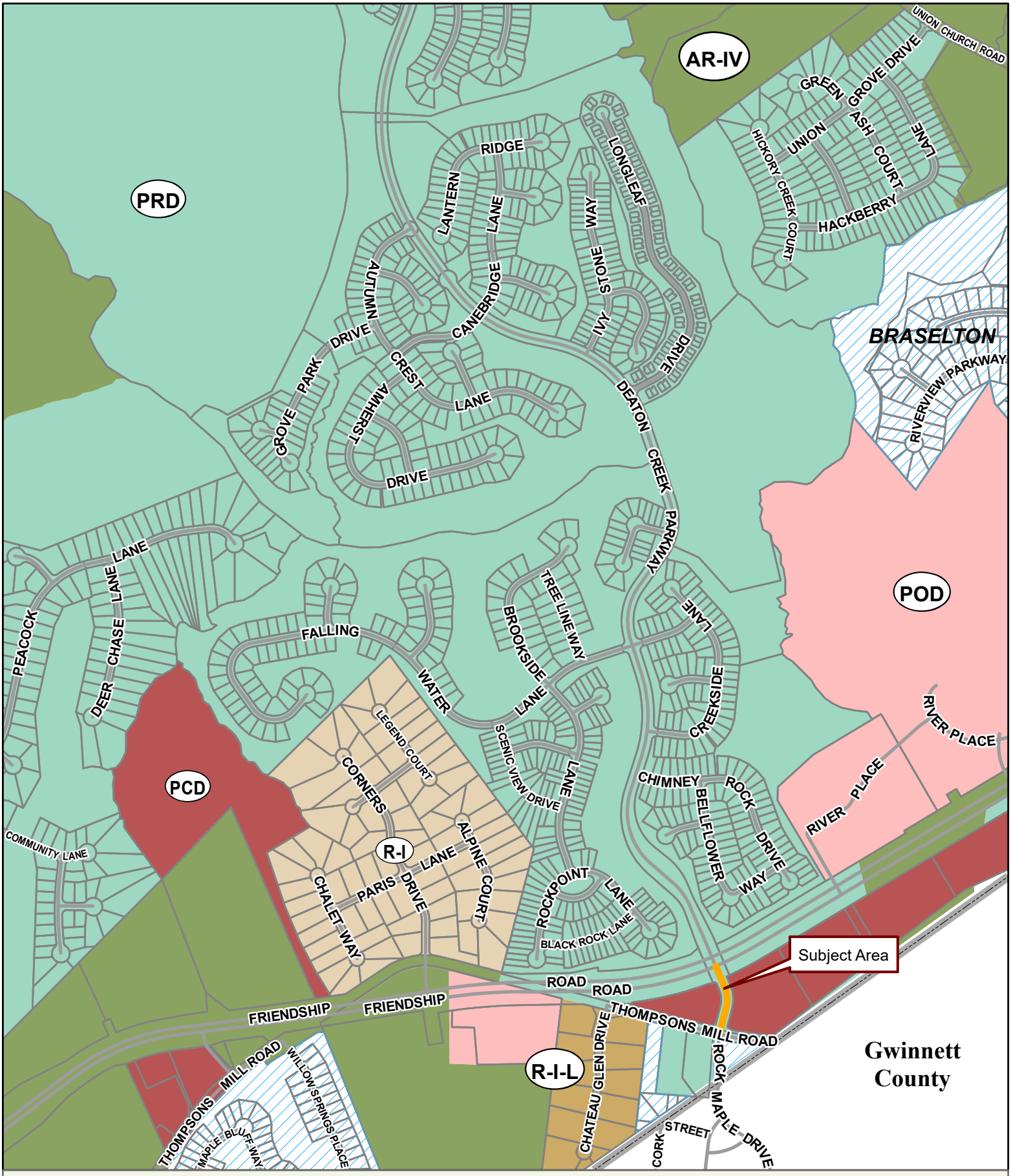

Applicant: PUBLIC WORKS STAFF
Road Name Change: SEGMENT OF DEATON CREEK PARKWAY TO DEATON WAY
Location: BETWEEN FRIENDSHIP ROAD & THOMPSONS MILL ROAD
Commission District 1 **PC Mtg. Date:** 06/05/2023

0 250 500 1,000
Feet

Zoning Boundary
City Limits
Subject Area
Structure

N

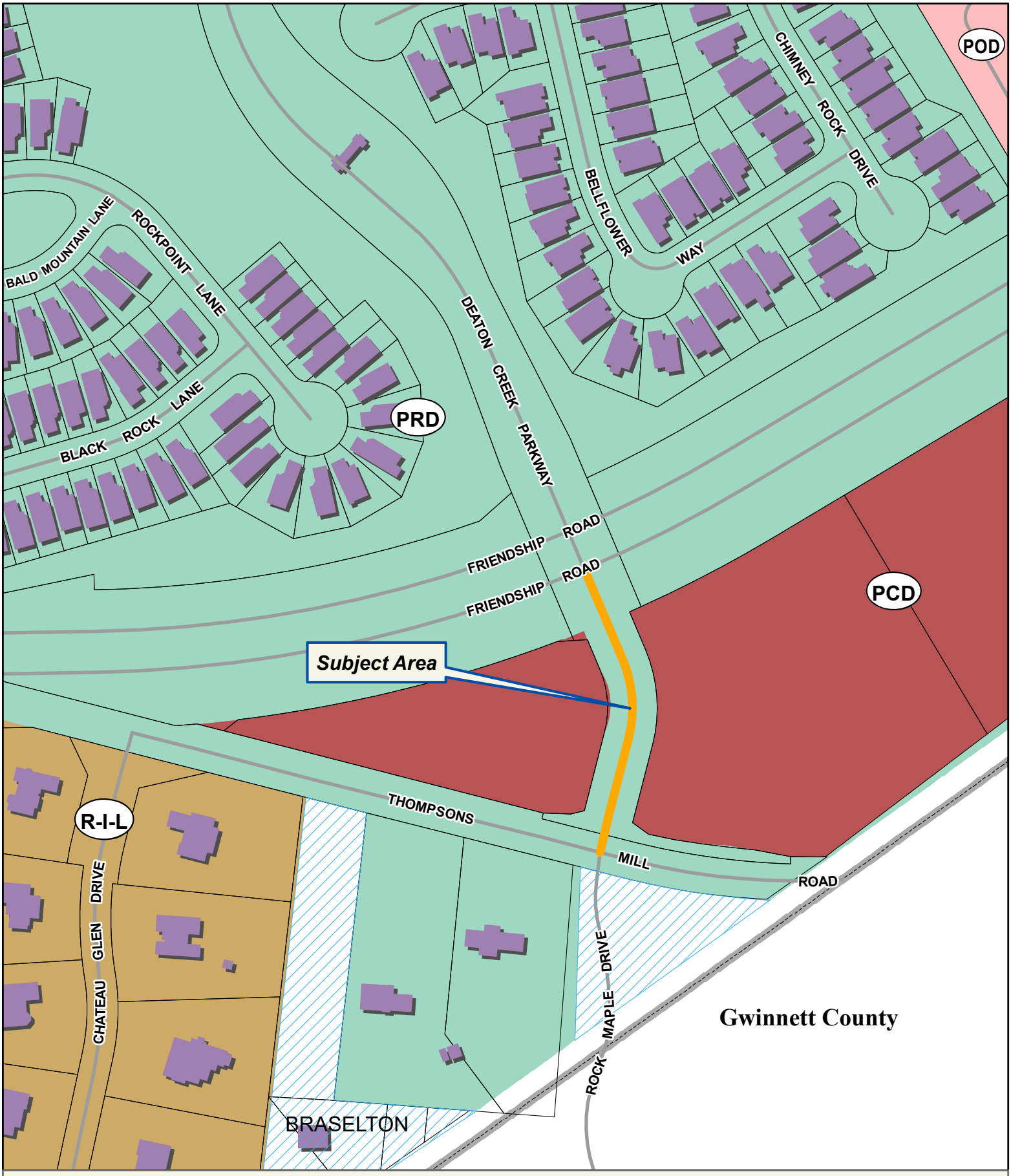

Applicant: PUBLIC WORKS STAFF
Road Name Change: SEGMENT OF DEATON CREEK PARKWAY TO DEATON WAY
Location: BETWEEN FRIENDSHIP ROAD & THOMPSONS MILL ROAD
Commission District 1 **PC Mtg. Date:** 06/05/2023

0 50 100 200
Feet

Zoning Boundary
City Limits
Subject Area
Structure

N

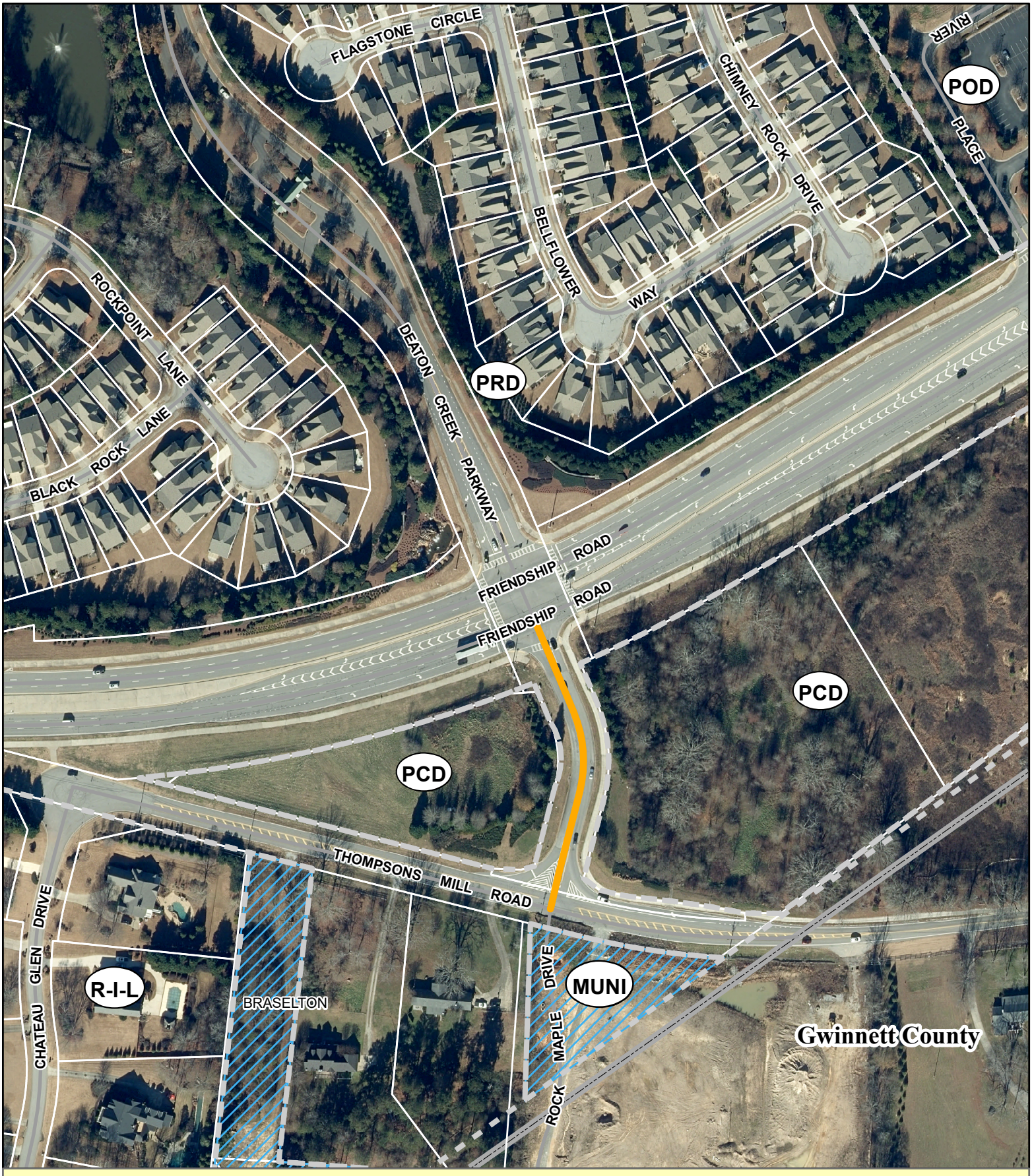

Applicant: PUBLIC WORKS STAFF
Road Name Change: SEGMENT OF DEATON CREEK PARKWAY TO DEATON WAY
Location: BETWEEN FRIENDSHIP ROAD & THOMPSONS MILL ROAD
Commission District 1 **PC Mtg. Date:** 06/05/2023

0 50 100 200
Feet

Zoning Boundary
City Limits
Subject Area

N

After recording return to:
Baker & Summy, PC
6340 Sugarloaf Parkway
Suite 200
Duluth, GA 30097
404-566-4535

STATE OF GEORGIA
COUNTY OF HALL

QUIT-CLAIM DEED

THIS INDENTURE, made the _____ day of March, 2023, between **VDC DEVELOPMENT GROUP, LLC, a Georgia limited liability company, and VINTAGE COMMUNITIES, INC., a Georgia Corporation,** as party or parties of the first part, hereinafter called "Grantor", and **HALL COUNTY, GEORGIA, a political subdivision within the State of Georgia**, as party or parties of the second part, hereinafter called "Grantee" (the words "Grantor" and Grantee" to include their respective heirs, successors and assigns where the context requires or permits).

WITNESSETH that : Grantor, for and in consideration of the sum of one dollar ($1.00) and other valuable consideration, cash in hand paid at and before the sealing and delivery of these presents, the receipt whereof is hereby acknowledged, by these presents does hereby remise, convey and forever QUITCLAIM unto the said Grantee,

SEE ATTACHED EXHIBIT "A" LEGAL DESCRIPTION and EXHIBIT "B" RIGHT OF WAY EXHIBIT

TO HAVE AND TO HOLD the said described premises to Grantee, so that neither Grantor nor any person or persons claiming under Grantor shall at any time, by any means or ways, have, claim or demand any right to title to said premises or appurtenances, or any rights thereof.

IN WITNESS WHEREOF, the Grantor has signed and sealed this deed, the day and year first above written.

GRANTOR:

VDC DEVELOPMENT GROUP, LLC,
a Georgia limited liability company,

_____ (Seal)
By: George P. Flanigan
Its: Managing Member

Signed, sealed and delivered this _____
day of March, 2023, in the presence of:

_____
Unofficial Witness

_____
Notary Public, My Commission Expires:
May 2, 2025

[Notary Seal]

APRIL A SASS NOTARY PUBLIC BARTOW COUNTY, GEORGIA MY COMMISSION EXPIRES MAY 02, 2025

(Additional signatures on the following page)

GRANTOR:

Signed, Sealed and Delivered this
10 day of ~~February~~ April, 2023, in
the presence of:

Jessica Lazu
Unofficial Witness

Robyn F
Notary Public, My Commission Expires: 3/1/2026 [Notary Seal]

Robyn Funderburg
NOTARY PUBLIC
Cobb County, Georgia
My Commission Expires March 1, 2026

VINTAGE COMMUNITIES, INC.
a Georgia Corporation

E. Masarsch (Seal)
By: Eric Masarsch
Its: Secretary

EXHIBIT "A"
Legal Description

TRACT A
A parcel of land lying in the 392nd G.M.D. (Clinchem District) of Hall County, Georgia, and being more particularly described as follows:

Commence at a found 5/8-inch rebar at the intersection of the southeasterly right-of-way of S.R. 347 (A.K.A. Friendship Road, having a variable public right-of-way) and the northeasterly right-of-way of Thompson Mill Road (A.K.A. Thompsons Mill Road, having an 80' public right-of-way); thence run South 75 Degrees 33 Minutes 40 Seconds East along said northeasterly right-of-way for a distance of 531.46 feet to a found 5/8-inch rebar and being the Point of Beginning of the parcel of land herein described; Thence leaving said right-of-way run South 87 Degrees 45 Minutes 58 Seconds East for a distance of 44.49 feet to a found 5/8 inch rebar; Thence run North 76 Degrees 22 Minutes 53 Seconds East for a distance of 22.39 feet to a found "X" scribed in curb; Thence run North 14 Degrees 25 Minutes 34 Seconds East for a distance of 130.25 feet to a point, said point lying on a curve to the left and having a radius of 160.06 feet, a chord bearing of North 04 Degrees 13 Minutes 49 Seconds West , and a chord distance of 102.41 feet; Thence run along the arc of said curve for a distance of 104.24 feet to a point; Thence run North 22 Degrees 53 Minutes 12 Seconds West for a distance of 51.11 feet to a found 5/8-inch rebar on the southeasterly right-of-way of aforementioned S.R. 347; Thence run North 66 Degrees 56 Minutes 01 Seconds East along said southeasterly right-of-way for a distance of 79.88 feet to a point; Thence leaving said right-of-way run South 22 Degrees 49 Minutes 30 Seconds East for a distance of 51.25 feet to a point, said point lying on a curve to the right and having a radius of 240.00 feet, a chord bearing of South 04 Degrees 10 Minutes 07 Seconds East , and a chord distance of 153.55 feet; Thence run along the arc of said curve for a distance of 156.30 feet to a point; Thence run South 14 Degrees 29 Minutes 16 Seconds West for a distance of 129.65 feet to a point; Thence run South 54 Degrees 06 Minutes 39 Seconds East for a distance of 31.81 feet to a point; Thence run South 77 Degrees 51 Minutes 06 Seconds East for a distance of 38.95 feet to a point; Thence run South 80 Degrees 19 Minutes 55 Seconds East for a distance of 8.79 feet to a point, said point lying on a curve to the left and having a radius of 1906.97 feet, a chord bearing of South 82 Degrees 45 Minutes 37 Seconds East , and a chord distance of 126.34 feet; Thence run along the arc of said curve for a distance of 126.36 feet to a point; Thence run South 79 Degrees 18 Minutes 48 Seconds East for a distance of 57.91 feet to a point on the northeasterly right-of-way of aforementioned Thompson Mill Road; Thence run the following courses and distances along said northeasterly right-of-way: North 88 Degrees 19 Minutes 30 Seconds West for a distance of 23.09 feet to a point, said point lying on a curve to the right and having a radius of 1099.03 feet, a chord bearing of North 81 Degrees 45 Minutes 43 Seconds West , and a chord distance of 238.81 feet; Thence run along the arc of said curve for a distance of 239.28 feet to a point; Thence run North 75 Degrees 31 Minutes 29 Seconds West for a distance of 143.21 feet to the Point of Beginning.

Said parcel containing 29,162 Square Feet, 0.67 acres.

AGENDA ITEM

Public Hearing to amend Hall County's Zoning Map as follows:

REPORT TO: **Work Session (07/10/23)**

REPORT TO: **Voting Meeting (07/13/23)**

ITEM NO: 356/2023

SUBJECT: **3263 Tanners Mill Road | Use Subject to County Commission Approval |** on a 37.28± acre tract located on the east side of Tanners Mill Road approximately 756 feet from its intersection with Weaver Road | Zoned AR-IV; Tax 15025 000002 **| Proposed use: agri-entertainment venue |** Commission District 1 **| Paden M. Dunagan, applicant.**

Meetings:

Work Session Date: 07/10/23 **Voting Meeting Date:** 07/13/23

Executive Summary:

Presenter: RD

Recommendation:

Approval, with conditions:

1. The agri-entertainment business shall operate as described in the narrative and depicted on the site plan.

2. The agri-entertainment business shall satisfy all comments from the Environmental Health Department, Fire Marshal, Public Works and Utilities, and Georgia Department of Transportation prior to obtaining an agri-entertainment business license. Plans addressing comments, or for any further improvements or development of the property shall be submitted for review and appropriate permits obtained.

3. No variances are granted as part of this request.

4. Any expansion to the existing agri-entertainment business shall require additional approval from the County Commission.

5. Per, section 2.60.060. – effective period of approved applications, all applications approved by the board, whether a request for variance from the terms of Title 17, a request for conditional use, a request for the enlargement, change or continuance of a nonconforming use or a request to appeal a decision by an administrative official in the enforcement of Title 17, shall be effective for a period of six months. If no action is taken by the applicant to implement the purpose of the application by obtaining the proper permit and/or license and proceeding with the building, occupancy or establishment of business within six months from the date of approval by the board, said approval shall become null and void.

Purpose of Request: **History:**

3263 Tanners Mill Road | Use Subject to County Commission Approval | on a 37.28± acre tract located on the east side of Tanners Mill Road approximately 756 feet from its intersection with Weaver Road | Zoned AR-IV; Tax 15025 000002 | **Proposed use: agri-entertainment venue |** Commission District 1 | **Paden M. Dunagan, applicant.**

Facts and Issues: **Options:**

Funding Requested	$ 0.00
Are funds within current budget?	No
Source of Funds	
Does the action involve a Resolution, Ordinance, Contract, Agreement, etc.?	No
Has it been reviewed by the County Attorney?	Yes
Is there a deadline for this item?	

Approvals:

Submit	Approve	Attorney	Administration
AD	RD	WLI	CR
Clerk			
JR			

Attachments:
Board Memo
Recommendation Report
Application
Narrative
Site Plan
Maps
Renderings
Environmental Health Comments
GDOT Comments
Public Works Comments
Fire Comments
Public Comments
Notice Sign Photos

HALL COUNTY
GEORGIA

POST OFFICE DRAWER 1435
GAINESVILLE, GA 30503

t: 770.531.6809 | f: 770.531.3902

DIRECTOR
Srikanth Yamala

PLANNING AND DEVELOPMENT
DIRECTOR
Randi Doveton

Hall County Government

COMMUNITY DEVELOPMENT AND INFRASTRUCTURE
PLANNING AND DEVELOPMENT

To: Richard Higgins, Chairman
Kathy Cooper, District 1 Commissioner
Billy Powell, District 2 Commissioner
Gregg Poole, District 3 Commissioner
Jeff Stowe, District 4 Commissioner

From: Randi Doveton, Director of Planning & Development

Date: June 19, 2023

Subject: **3263 Tanners Mill Road | Use Subject to County Commission Approval |** on a 37.28± acre tract **| Proposed use: agri-entertainment venue | Paden M. Dunagan, applicant.**

The request before you is the request of Paden M. Dunagan for a Use Subject to County Commission approval to allow an agri-entertainment venue with a variance to allow outside amplification. This item is located within Commission District 1.

At their June 5, 2023 meeting, the Hall County Planning Commission voted to recommend approval of the use but to deny the variance request. The use was approved with five (5) conditions **(3-0, Sosebee & Varner absent)**.

There was **one (1) comment in opposition submitted** in advance of the Planning Commission meeting and **one (1) person spoke in opposition during the public hearing.**

There have been no changes to the request since the Planning Commission took action.

Planning Commission Approval Conditions:

1. The agri-entertainment business shall operate as described in the narrative and depicted on the site plan.
2. The agri-entertainment business shall satisfy all comments from the Environmental Health Department, Fire Marshal, Public Works and Utilities, and Georgia Department of Transportation prior to obtaining an agri-entertainment business license. Plans addressing comments, or for any further improvements, or development, of the property shall be submitted for review and appropriate permits obtained.
3. No variances are granted as part of this request.
4. Any expansion to the existing agri-entertainment business shall require additional approval from the County Commission.

5. Per, §2.60.060. – effective period of approved applications, all applications approved by the board, whether a request for variance from the terms of Title 17, a request for conditional use, a request for the enlargement, change or continuance of a nonconforming use or a request to appeal a decision by an administrative official in the enforcement of Title 17, shall be effective for a period of six months. If no action is taken by the applicant to implement the purpose of the application by obtaining the proper permit and/or license and proceeding with the building, occupancy or establishment of business within six months from the date of approval by the board, said approval shall become null and void.

HALL COUNTY PLANNING COMMISSION
RECOMMENDATION REPORT

Applicant.....Paden M. Dunagan

Request.....(A) Use Subject to County Commission Approval for an agri-entertainment venue.
(B) Variance from the standards of 17.215 to permit outside amplification of voice, music, and/or instruments.

Proposed Use.....agri-entertainment venue

Size.....37.28± acres

Zoning.....Agricultural Residential IV (AR-IV, 17.120)

Location.....**3263 Tanners Miller Road** | Tax Parcel 15025 000002

Commission District.....One

Planning Commission Date.....June 5, 2023

Staff Recommendation..... **(A) Approval with conditions as the proposed request is consistent with the intent and standards of the agri-entertainment district (17.215) and**
(B) Denial for a variance from the standards of 17.215 to permit outside amplification of voice, music, and/or instruments as the request does not meet the hardship criteria established in 2.60.030.J.

Planning Commission Recommendation.....(A) Approval, with conditions.
Vote: 3-0 (Sosebee & Varner absent)
(B) Denial.
Vote: 3-0 (Sosebee & Varner absent)

Planning Commission Conditions:

1. The agri-entertainment business shall operate as described in the narrative and depicted on the site plan.
2. The agri-entertainment business shall satisfy all comments from the Environmental Health Department, Fire Marshal, Public Works and Utilities, and Georgia Department of Transportation prior to obtaining an agri-entertainment business license. Plans addressing comments, or for any

further improvements or development of the property shall be submitted for review and appropriate permits obtained.
3. No variances are granted as part of this request.
4. Any expansion to the existing agri-entertainment business shall require additional approval from the County Commission.
5. Per, §2.60.060. – effective period of approved applications, all applications approved by the board, whether a request for variance from the terms of Title 17, a request for conditional use, a request for the enlargement, change or continuance of a nonconforming use or a request to appeal a decision by an administrative official in the enforcement of Title 17, shall be effective for a period of six months. If no action is taken by the applicant to implement the purpose of the application by obtaining the proper permit and/or license and proceeding with the building, occupancy or establishment of business within six months from the date of approval by the board, said approval shall become null and void.

Public Forum:

David Jones, 5110 Weaver Road, Gainesville, spoke in opposition. Concerns were noise and times of operation.

Summary Analysis

The applicant is requesting (A) conditional use approval from the County Commission to bring an existing agri-entertainment venue into compliance with the agri-entertainment business standards (17.215) located on the 37.28± acre parcel. Within the Agricultural Residential IV (AR-IV, 17.120), agri-entertainment businesses are a use subject to the approval of the County Commission, resulting in the current application. Additionally, the application is requesting (B) a variance from the standards of the agri-entertainment district (17.215.040) which states that "outdoor activities within the agri-entertainment event barn or primary event structure shall not involve the outside amplification of voice, music and/or instruments except during a wedding ceremony."

In the submitted application materials, the narrative describes the agri-entertainment business as being a venue for weddings and events that are ceremony-type gatherings. The events will take place in an existing barn (80' x 96'), which is located 350 feet from the eastern boundary of the property and 510 feet from the southern boundary. The barn is timber-framed with a metal standing seam roof and is 7,840 square feet in area. The total occupancy of the barn will be set by Hall County Fire Marshals and determined at a future date. The proposed hours of operation meet the criteria established by the agri-entertainment district (17.215). Specifically, events would begin no earlier than 9:00 a.m. and would end no later than 10:00 p.m. on Sunday through Thursday and no later than 12:00 a.m. on Friday and Saturday.

An existing gravel parking lot is located to the west of the barn, partially under a power line easement. The applicant has provided documentation from Georgia Power that the gravel parking lot beneath the transmission lines is approved but additional documentation is needed to verify the proposed parking lot use.

The applicant's narrative states that there are two (2) types of activities that will occur outside of the barn: an outdoor wedding ceremony and a fire pit. In either instance, there would be no permanent outdoor audio for

the grounds surrounding the barn. Instead, an audio system would be used temporarily if it was warranted by the event.

The applicant is requesting one (1) variance from the conditions of an agri-entertainment business, (17.215.040). Specifically, the applicant has requested relief from the following condition:

- Outdoor activities within the agri-entertainment event barn or primary event structure shall not involve the outside amplification of voice, music and/or instruments except during a wedding ceremony.
    - *The applicant's narrative states that there would be two instances where gatherings may occur outside of the event barn. The first being outdoor ceremonies, which would permit the temporary use of outdoor amplification under the standards of (17.215.040). The second scenario would be an outdoor fire pit, which would be an outdoor gathering area used during events. In both scenarios, the applicant's narrative states that there would be no permanent outdoor audio equipment, instead it would be temporary and mobile, set up only if outdoor activities were planned. The proposal* ***does not meet*** *this condition.*

Based on the future land-use plan, staff finds the requested conditional use *consistent* with the intent of the agri-entertainment use and the future land use classification of Rural Residential character area in the Comprehensive Plan.

Zoning Analysis

(A) Use Subject to County Commission Approval | Agri-entertainment venue

Per §17.215.040, conditions and regulations for agri-entertainment:

1. A Hall County Business License shall be required if the zoning request is approved for the agri-entertainment events.
    - *The applicant will be required to obtain a Hall County Business License, subject to the below conditions and any additional conditions added, prior to beginning operation.*
2. The property shall be used for the purpose of providing an agri-entertainment venue, as provided for in section 17.215.030(A).
    - *The proposed uses are consistent with those described in section 17.215.030(A).*
3. The structure that will house the agri-entertainment event shall be located a minimum of 300 feet from any property lines of a different owner.
    - *The event barn meets this requirement. The barn is located 350 feet from the eastern property line and 510 feet from the southern property line*.
4. All parking for an agri-entertainment event shall be located a minimum of 200 feet from any property lines of a different owner.
    - *The existing parking lot appears to meets this requirement, although there are no dimensions indicated on the site plan.*
5. Parking shall be permitted on grass or gravel.
    - *The applicant's narrative states that the parking area is gravel.*
6. The agri-entertainment event barn or primary event structure shall be permitted to be constructed only on the property described.

- *The existing 80 foot by 96 foot timber-framed barn, which would be utilized as the agri-entertainment venue, was permitted through Hall County Building Inspections in August of 2022 on the subject property.*

7. The maximum number of attendees to occupy any agri-entertainment event barn or structure on the premises shall be regulated by the Hall County Fire Marshal.
    - *The applicant has not included any information regarding capacity for the proposed activities; however, the occupancy will be determined by the county Fire Marshal prior to the issuance of any license.*
8. The occupancy of the agri-entertainment event barn or primary event structure shall not exceed the occupancy load provisions of the Uniform Building Code and those occupancy load limits shall be posted on the premises by the Hall County Building Inspection Department.
    - *If approved, the occupancy will be determined by Hall County Building Inspections, based on the above criteria.*
9. The use of the premises for an agri-entertainment venue shall be permitted only after the issuance of a certificate of occupancy by the Hall County Building Inspection Department.
    - *If approved, the applicant shall be required to obtain a certificate of occupancy prior to commencing operations.*
10. Any improvements required to support the property as an agri-entertainment venue shall be made only after the issuance of a building permit by the Hall County Building Inspection Department.
    - *The existing barn, which is proposed to be utilized as the agri-entertainment venue, was permitted by Hall County Building Inspections in August of 2022. Additional inspections will be required for the commercial use of the structure.*
11. Outdoor activities within the agri-entertainment event barn or primary event structure shall not involve the outside amplification of voice, music and/or instruments except during a wedding ceremony.
    - *The applicant has requested a variance to permit the outdoor amplification of voice, music, and/or instruments in certain situations.*
12. Agri-entertainment events shall commence no earlier than 9:00 a.m. and shall terminate no later than 10:00 p.m. on Sunday through Thursday and no later than 12:00 a.m. on Friday and Saturday.
    - For [the] purpose of this section, *termination* shall mean the termination of food, drinks, service and entertainment with the understanding that attendees will need a reasonable amount of time after termination to exit the premises.
    - *The proposed agri-entertainment business meets this condition.*
13. All agri-entertainment events shall be provided with adequate potable water and sanitary waste disposal systems as approved by the Hall County Environmental Health Department.
    - *The applicant has not indicated how potable water and sanitary waste will be handled for the event venue.*
14. All agri-entertainment events shall provide for adequate access and egress for emergency vehicles as determined through the development review process.
    - *The applicant will be required to receive approval from Hall County Engineering and Fire Services regarding access to the property.*
15. All agri-entertainment events shall be provided with adequate personnel to assist with parking, emergency and other potential impacts of each event.
    - *The applicant has not addressed this in the application, but it will be required if the request is approved.*
16. If the property being considered for agri-entertainment use is "bona-fide conservation use property" as defined under O.C.G.A. §§ 48-5-7.1 through 48-5-7.4, caution should be used to insure that the proposed agri-entertainment use of the property does not constitute a breach of the conservation covenants applicable to the property.

- *The property is not under a conservation use covenant and as such this regulation is not applicable.*

Per Planning Commission and Hall County Commission consideration and decision (17.380.060), the planning commission shall study the need and justification for the change based on a determination of the facts applicable to the particular case, and the following general lines of inquiry shall be considered, to wit:

1. Whether the zoning proposal will permit a use that is suitable in view of the use, development and zoning of adjacent and nearby property; **The proposed use of the property as an event venue in the Agricultural-Residential-IV (AR-IV, 17.120) district is consistent with the standards for agri-entertainment uses (17.215). The surrounding properties are also zoned AR-IV, 17.120.**

2. Whether the zoning proposal will adversely affect the existing use or usability of adjacent or nearby property; **The request is for conditional use approval for an agri-entertainment business in the Agricultural-Residential-IV (AR-IV, 17.120) district. The proposed use may be more intense than that of the adjacent or nearby parcels, but the usability should not be impacted. If approved, the site will be developed in accordance with applicable development regulations.**

3. Whether the property to be affected by the zoning proposal has a reasonable economic use as currently zoned; **Yes, the property has reasonable economic use as currently zoned, Agricultural-Residential-IV (AR-IV, 17.120) but the proposed business cannot occur as described without approval of the conditional use request.**

4. Whether the zoning proposal will result in a use which will or could cause an excessive or burdensome use of existing streets, transportation facilities, utilities, schools, police protection, fire protection, public health facilities or emergency medical service; **The proposed use may cause an excessive or burdensome use of existing streets and transportation facilities, depending on the number of guests the business can accommodate.**

5. Whether the zoning proposal is in conformity with the policy and intent of the future land use plan for the physical development of the area; **The current application is for a conditional use request for agri-entertainment business within the Agricultural-Residential-IV (AR-IV, 17.120) district. The parcels fall within the Rural Residential character area of the Comprehensive Plan. The intent of this character area is to preserve the established residential/rural character and create a transition between the Rural character area and development in Residential areas. The proposed use is consistent with the Comprehensive Plan and the standards for agri-entertainment businesses.**

6. The extent to which property values are diminished by the existing zoning restrictions; **Staff is unable to determine the extent to which property values are diminished by the existing zoning restrictions.**

7. The extent to which the destruction of the subject property's value under the existing zoning promotes the health, safety, morals or general welfare of the public; **Staff is unable to comment on the impact of property values without a full market analysis. Multiple factors impact property value including construction types, proposed uses, and maintenance. Often it is difficult to determine the effect of a development on adjacent properties until the development is completed.**

8. The relative gain to the public as compared to the hardship imposed upon the individual property owner; **Staff has not identified a hardship imposed on the property owner as the property is currently zoned.**

9. The length of time the property has been vacant as zoned considered in the context of land development in the area in the vicinity of the property; **Aerial imagery shows the property as undeveloped until 2020, when the applicant constructed a single-family residence on the property. In 2022 the applicant obtained a building permit for an 80' by 96' farm use barn which is intended to be utilized as the event venue.**

10. Whether there are other existing or changing conditions affecting the use or development of the property which give supporting grounds for either approval or disapproval of the zoning proposal; **There are no known changing conditions affecting the use or development of the property.**

11. Whether the change would create an isolated district unrelated to the surrounding districts; **There is no proposed change to the underlying zoning, as such, this criteria is not applicable.**

12. Whether the present zoning district boundaries are illogically drawn in relation to existing conditions in the area; **There is no evidence that the present zoning district boundaries are illogically drawn.**

13. Whether the change requested is out of scale with the needs of the county as a whole or the immediate neighborhood; **No, the request is not out of scale with the needs of the county as a whole, the proposed use could compliment the residential growth occurring in the south Hall area.**

14. Whether it is impossible to find adequate sites for the proposed use in districts permitting such use and already appropriately zoned; **The proposed uses require Board of Commissioner approval for a conditional use permit. As such, there are no adequate sites already zoned for an agri-entertainment business.**

15. Whether the need for rezoning could be handled instead by a variance request to the [planning commission]; **No, the request could not be handled instead by a variance.**

16. Whether there would be an ecological or pollution impact resulting from major modifications to the land if the request is granted; **Any land disturbance activities on the property shall be required to go through the land development permitting process, and as a result are subject to local, state, and federal regulations. As a result, there should not be an ecological or pollution impact resulting from any modification to the land if the request is granted.**

17. Whether there is reasonable evidence based upon existing and anticipated land use that would indicate a mistake was made in the original zoning of the property; **There is no indication that a mistake was made in the original zoning.**

(B) Variance | to allow for outside amplification of voice, music and/or instruments except during a wedding ceremony

The Planning Commission is hereby authorized to grant variances from the strict application of this Resolution upon proof by a preponderance of the evidence that 2.60.030.J provided the request meets the criteria set forth in 2.60.030.K.

1. There are extraordinary and exceptional conditions pertaining to the particular lot in question because of its size, shape or topography (the hardship must relate to the physical character of the lot and not to a personal or economic hardship); **There do not appear to be extraordinary or exceptional conditions pertaining to the subject property, instead the need for a variance has been created by the applicant's proposed use of outdoor amplification during events as opposed to the site conditions.**

2. The application of the requirements of this Title 17 to this particular piece of property would create an unusual hardship; **No unusual hardship would be created through the application of the requirements Title 17. The applicant would not be able to have outdoor amplification other than during times permitted by the agri-entertainment regulations (17.215).**

3. Such conditions are peculiar to the particular piece of property involved and are not common to other properties in the neighborhood; **No, the conditions are not peculiar to the subject parcel but the result of the proposed use of the property.**

4. Such conditions are not the result of any actions of the property owner; **The site development has been proposed by the applicant.**

5. Relief, if granted, would not cause substantial detriment to the public good or impair the purposes and intent of Title 17; provided, however, that no variance may be granted for a use of land or building or structure that is prohibited by Title 17 or for a conditional use which has been denied by the county planning commission. **Relief, if granted, would not cause substantial detriment to the public good or impair the purposes and intent of Title 17.**

17.380.050. - Submission requirements

A. Any person or persons requesting a change in the official zoning map or use subject to approval of the county commission shall file an application with a plat or map of the property attached thereto, together with payment of such fees set forth in chapter 17.30 to cover administrative and advertising costs, in the planning department office. Such person or persons or their authorized agent shall appear in person at the public hearing held to consider the district change. **Proposal meets the requirement. Applicant has paid the appropriate fees and understands that someone must be present at the Hall County Planning Commission.**

B. All applications for a change of zoning classification or use subject to approval of the county commission shall include:

   1. A narrative statement identifying the existing and proposed use of the property and addressing each of the criteria set forth in section 17.380.060.C of this section [chapter]. **The applicant has submitted a narrative and site plan but has not explicitly addressed the criteria listed in 17.350.120.**

2. A site plan drawn to scale designating the area covered by the application and identifying existing and proposed buildings and uses, adjacent existing land uses, zoning on contiguous parcels, including those across an abutting public right-of-way, and any other significant site improvements proposed to accommodate the proposed use or buffer adjacent uses, etc., or a plat of the subject property where no specific land use is proposed. In cases where only a plat or map is provided and no land use is proposed, the planning commission and county commission shall evaluate the application based on the most intense possible land use permitted in the proposed district**. The applicant submitted a site plan drawn to scale.**

C. For any application for a slow rate land treatment system (see chapter 17.20), the following additional requirements apply. **This standard is not applicable as the site will be served by an onsite septic system.**

D. For any application proposing the development of 100 or more residential dwelling units, a traffic impact study shall be submitted prior to consideration of the application by the planning commission. At the applicant's expense, the traffic impact study shall be prepared by a professional engineer in accordance with requirements established by the Hall County Engineering Department. The engineering department shall review the traffic impact study and forward any comments to the Hall County Planning Commission. **As there are not 100 or more residential dwelling units proposed, this criteria is not applicable.**

Development Support and Constraints – Departmental / Agency Comments

Hall County Environmental Health

An email dated May 17, 2023, from Emily McGahee, Environmental Health, stated "A detailed business plan must be submitted to Hall County Environmental Health for review. Additional items septic system modification/expansion may be required after review of business plan. Tourist Accommodation permit/plan review and/or Food Service permit/plan review may be required after review of business plan."

Hall County Fire Marshal

An email dated May 16, 2023, from John Hornick, NPQ Fire Inspector 1, Plans Review Lieutenant stated "Hall County Fire Marshal's Comments:

1) Site visit on 5/6/23 by the Hall County Fire Marshal's Office found a large commercial barn under construction that does not meet fire code as an event venue.
2) The conceptual site plan is hand drawn and not to scale, the Hall County Fire Marshal's Office cannot comment on site plan as proposed. Note: The site work and proposed commercial barn are near completion.
3) The conceptual building plans show the occupancy classification as a Group S-1 Storage Occupancy with an occupant load of 8. As the project data does not match the scope of work summary for a timber framed commercial barn for events, the Hall County Fire Marshal's Office cannot comment on the building plan as proposed. Note: The commercial barn is near completion and does not match the conceptual building plans.
4) The conceptual site and building plans do not meet fire code as proposed.
5) Site and building plans will be required.

Hall County Public Works and Utilities

In a memo dated May 18, 2023, Bill Nash, Director of Public Works and Utilities, provided the following comments:

Engineering:
The site may require a stormwater management report should the site plan indicate the proposed development meets stormwater thresholds for impervious surfaces and/or disturbed acreage Show stream buffer and impervious setback from wrested vegetation not center line of stream
Show stream buffer and impervious setback from wrested vegetation not center line of stream
Proposed development is within 200' of state waters and will require a L.D.P.

Traffic:
No comment.

Utilities
No comment.

Georgia Department of Transportation
In an email dated May 11, 2023, Jonathan Peevy, Assistant District Traffic Engineer, confirmed this project will require GDOT coordination.

- **Excerpts from the minutes of the June 5, 2023 meeting**

Applicant's Presentation:

Randi Doveton, Planning Director, presented a summary of the request.

Paden Dunagan, 3263 Tanners Mill Road, Gainesville, presented the request. The applicant stated that they are in the middle of 40-acres and would like to be able to amplify music.

Public Forum:

David Jones, 5110 Weaver Road, Gainesville, spoke in opposition. Concerns were noise and times of operation.

Planning Commission Comments:

Mr. Braswell clarified that the applicant is requesting to allow the amplification of music after a wedding ceremony. Ms. Pilcher read the recommended conditions to make sure the applicant agreed to them.

Motion: A motion to approve, with conditions was made by Ms. Pilcher and seconded by Mr. Hunt. Vote: 3-0 (Sosebee & Varner absent)

Conditions:

1. The agri-entertainment business shall operate as described in the narrative and depicted on the site plan.

2. The agri-entertainment business shall satisfy all comments from the Environmental Health Department, Fire Marshal, Public Works and Utilities, and Georgia Department of Transportation prior to obtaining an agri-entertainment business license. Plans addressing comments, or for any further improvements or development of the property shall be submitted for review and appropriate permits obtained.
3. No variances are granted as part of this request.
4. Any expansion to the existing agri-entertainment business shall require additional approval from the County Commission.
5. Per, §2.60.060. – effective period of approved applications, all applications approved by the board, whether a request for variance from the terms of Title 17, a request for conditional use, a request for the enlargement, change or continuance of a nonconforming use or a request to appeal a decision by an administrative official in the enforcement of Title 17, shall be effective for a period of six months. If no action is taken by the applicant to implement the purpose of the application by obtaining the proper permit and/or license and proceeding with the building, occupancy or establishment of business within six months from the date of approval by the board, said approval shall become null and void.

PLANNING AND DEVELOPMENT DEPARTMENT
2875 BROWNS BRIDGE ROAD GAINESVILLE GA 30504
MAILING ADDRESS PO BOX 1435 GAINESVILLE GA 30503
t 770-531-6809 | f 770-531-3902

HALL COUNTY
We have it all in Hall

CONDITIONAL USE APPLICATION

Applicant (Name & Mailing Address)

Paden M. Dunagan
3263 Tanners Mill Road
Gainesville, GA 30507
Phone 678-936-9371
Email Address paden@LDweldingservice.com
Proposed Use Venue agri-entertainment

Property Owner (Name & Mailing Address)

Same
Phone
Email Address

Contact Person (Name & Mailing Address)

Same
Phone
Email Address

Status of Applicant

- ✓ Owner
- ☐ Option to Purchase
- ☐ Area Resident
- ☐ Other

Requested Action

Permissive Use:
☐ HCPC ☑ HCC
Fee:$ 1,000.00
Receipt #:
Check #:

Zoning: Ag AR-IV
Acreage 37 acres
Tax Parcel Number 15025 000002
Location Address 3263 Tanners Mill Road Gainesville, GA 30507

I hereby certify that the above information and all attached information are true and correct.

Sign [signature] Date: 3-21-2023

Applicant must complete all information above. Failure to complete this section will result in the refusal of the application. The Planning Department has 15 days to review all applications and will set the dates for each application. If the application is found insufficient, an agenda date will not be set until the required information is submitted. Please note that the Planning Commission and County Commission dates are tentative.

Application Withdrawal: I hereby **withdraw** the application.

Sign _____ Date: _____

Staff Use Only

Application Date: 3/30/2023
Taken by: B. Garmon
Tentative Planning Commission Date: 6/5/2023
Tentative County Commission Date: 7/13/2023
County Commission District: 1

PLANNING AND DEVELOPMENT DEPARTMENT
2875 BROWNS BRIDGE ROAD, GAINESVILLE, GA 30504
MAILING ADDRESS: PO BOX 1435, GAINESVILLE, GA 30503
t: 770-531-6809 | f: 770-531-3902

HALL COUNTY
We have it all in Hall

AUTHORIZATION OF PROPERTY OWNERS

Note: If the applicant is the property owner, please disregard this form.

Name of owner(s) Paden M. Dunagan

Address 3263 Tanners Mill Road
Gainesville, GA 30507

Phone Number 678-936-9371

Name of applicant(s) _____

Address Same

Phone Number _____

I swear that I am the owner of the property which is the subject matter of the attached applications as shown in the records of Hall County, Georgia.

I authorize the person named above to act as applicant in the pursuit of a rezoning, permissive use, or variance of this property.

Signature of Owner(s) Paden M. Dunagan

Personally appeared before me
PADEN M. DUNAGAN

who swears that the information contained in this authorization is true and correct to the best of his/her knowledge and belief.

Notary Public _____ Date _____

PLANNING AND DEVELOPMENT DEPARTMENT
2875 BROWNS BRIDGE ROAD GAINESVILLE GA 30504
MAILING ADDRESS PO BOX 1435 GAINESVILLE GA 30503
t 770-531-6809 | f 770-531-3902

HALL COUNTY
We have it all in Hall

CAMPAIGN CONTRIBUTIONS DISCLOSURE FORM

This form must be completed by the applicant and property owner, or person representing the property owner, for all zoning actions.

OCGA § 36-67A-3[C] Disclosure of campaign contributions:

(b) When any applicant for zoning action has made, within two years immediately preceding the filing of the applicant's application for the zoning action, campaign contributions aggregating $250.00 or more to a local government official who will consider the application, it shall be the duty of the applicant to file a disclosure report with the governing authority of the respective local government showing:

(3) The name and official position of the local government official to whom the campaign contribution was made; and

(4) The dollar amount and description of each campaign contribution made by the applicant to the local government official during the two years immediately preceding the filing of the application for the rezoning action and the date of each such contribution.

(b) The disclosures required by subsection (a) of this Code section shall be filed within ten days after the application for the zoning action is first filed. (Code 1981, Section OCGA § 36-67A-3[C], enacted by GA L. 1986, page 1269, Section 1, GA L. 1991, page 1365, Section 1).

I hereby certify that I have read the above and that:

I have**____ I have not ✓

within the two years immediately preceding this date, made any contribution(s) aggregating $250.00 or more to any local government official involved in the review or consideration of this application.

**If you have made such contributions, you must provide the data required below within ten (10) days of filing this application.

Name of Official(s): _____ Office: _____

Dollar Amount: _____ Date of Contribution: _____

Applicant's/Owner's Signature: _____ **Date:** 3-28-2023

Applicant's/Owner's Name (Printed): PAOEN M. DUNKERN

March 29th, 2023

DUNAGAN HILLS VENUE

Conditional Use Narrative

The purpose of Dunagan Hills Venue is to provide a general use venue for agri-entertainment that can be used for weddings and other types of ceremonies. These public gatherings will be limited to receptions and meetings that pertain to an agri-entertainment setting.

- The proposed use and type of business is strictly for weddings and events the are ceremony type gatherings. We are zoned AR-IV and have 37.65 acres, which puts all persons and structures far away from neighboring properties. We have the utmost interest in keeping the peace in the area and by doing so we will operate within the ordinance hours stated in the conditions and regulations for agri-entertainment.
- The structure and parking is centrally located in order to keep as much of a buffer as possible between surrounding properties. We will have ample parking on gravel close to the venue building. The drive entering and exiting the property will be graveled and asphalt to keep noise and dust to a minimum. We have also received approval from Georgia Power to park under the right of way of the powerline. See Attached
- Once we have completed the Condition Use Application, we will apply for a Hall County Business License in order to stay in accordance with all regulations. This will be done once the Certificate of Occupancy is provided by the Hall County Building Department upon the final inspection.
- I have met with the Hall County Fire Marshall and the maximum number of attendees of TBD has been set by there regulations in order to keep a safe environment in the place of an emergency or fire.
- There would be 2 types of gatherings outside the event structure. One would be an outdoor firepit for the comfort of guests. The other would be in the case of an outdoor wedding ceremony at the request of the bride. We will not have permanent outdoor audio for this type of event, it would only be a mobile temporary setup for the specific application.

BOUNDARY INFORMATION AS SHOWN ON PLAT BOOK 43, PAGE 264

SHEET NUMBER

SHEET TITLE

PROJECT NAME

PROPOSED HOUSE LOCATION FOR PADEN DUNAGAN
3263 TANNERS MILL ROAD
TAX PARCEL 15025 000002
CANDLER-GMD 1385
HALL COUNTY, GEORGIA

PROFESSIONAL SEAL

GEORGIA
REGISTERED
No. 2244
GEORGE SURVEYOR
GIVAN A. KYTLE

DRAWING ISSUE / REVISION

DATE	INITIALS/DESCRIPTION
9/22/2020	AS-BUILT LOCATION SKETCH

KYTLE ENGINEERING
& LAND SURVEYING
5367 HIGHWAY 52 - P.O. BOX 402
GILLSVILLE, GEORGIA 30543
PHONE: (404) 317-1544

IPF = IRON PIN FOUND
IPS = " " SET

MAG.

IPS
S71-48E
202.3
IPF
S73-19E
226.8
℄ BRANCH @ FENCE CORNER
WILLIAMS
S73-55E 827.3'
FENCE CORNER
IPS @ 6" HICKORY
S77-42E
104.0
S68-52E 719.52
IPF
MATHIS
S30-30E
306.6
POINT IN ℄ ROAD

S.R. # 211
N12-35E
626.6
GEORGIA POWER
℄ BRANCH
S21-01W
701.0
LOT # 4
ELIZABETH BRASELTON, EST.
IPS
N0-33W
117.1
10.02 ACRES
TRACT-1-
N0-36W
180.4
N6-10W
165.4
N0-17E
146.6
SMITH-DEAL
(NOW OR FORMERLY)
N2-15E
79.5
N16-21E
181.3
Fence Cor. & IPS
S46-30W (TIE) 293.2'
℄ ROAD
S.R. # 211
338.5'
S2-01E
IPS @ 10" POPLAR
S3-26W
142.1
N66-45W
46.0
℄ ROAD
15'
RIGHT OF WAY
N33-31W
111.7
S19-35W
109.7
S48-09W
56.6
N69-43W
66.4
N 83-03W 1052.75

27.63 ACRES
TRACT -2-

1287.22
S15-22W
N15-22E

30.65 ACRES
TRACT-3-

IPS @ 8" HICKORY
N 81-25W 1312.1

S1-50E
892.5'
℄ ROAD (COOPER BRIDGE RD.)
GA. KRAFT
ROCK & IPF

TRANSMISSION LINES

CAGLE

H. F. FARLEY, JR. ★ WM. H. COLLINS
REGISTERED
No. 1301 No. 1435
Expires 12-31-70
LAND SURVEYORS
GEORGIA

68.30 ACRES ... TOTAL

FARLEY-COLLINS ASSOC. P. O. BOX 731 532-1001 1201 THOMPSON BRIDGE ROAD GAINESVILLE, GA.	SCALE: 1" = 200 DATE: MAY 5, 1970	PROPERTY OF AMOS H. NICHOLS CANDLER (GM 1389) DISTRICT HALL COUNTY, GA.

HOWARD SUTTON CO., N. Y. C. 93161

264

Recorded May 26, 1970

H. Grady Watson - Clerk

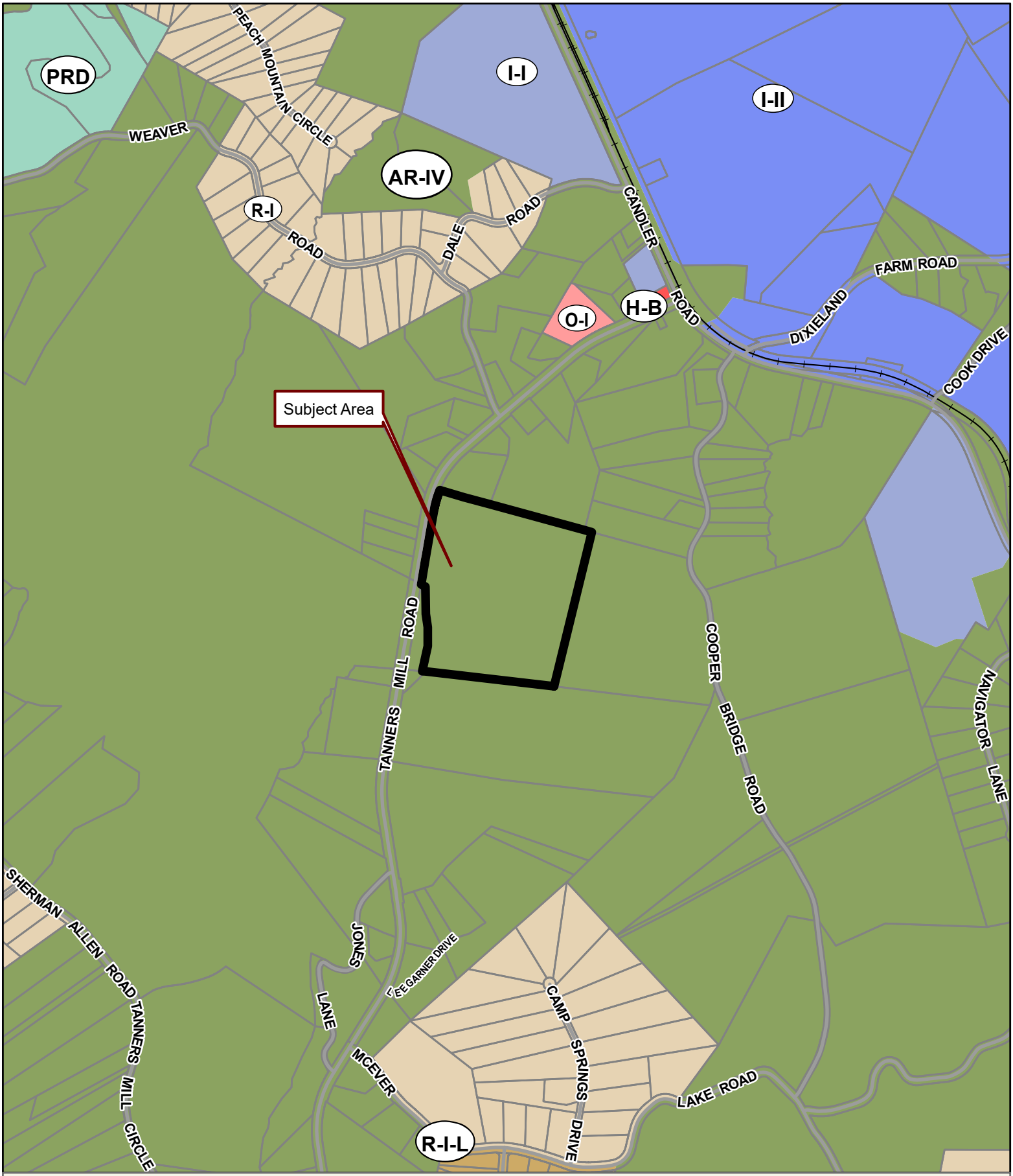

Applicant: PADEN M. DUNAGAN
Tax Parcel #: 15025 000002
Location: 3263 TANNERS MILL ROAD, GAINESVILLE, GA 30507
Commission District 1 **PC Mtg. Date:** 06/05/2023

0 300 600 1,200
Feet

Zoning Boundary
City Limits
Subject Area
Structure

N

Applicant: PADEN M. DUNAGAN
Tax Parcel #: 15025 000002
Location: 3263 TANNERS MILL ROAD, GAINESVILLE, GA 30507
Commission District 1 **PC Mtg. Date:** 06/05/2023

0 100 200 400
Feet

Zoning Boundary
City Limits
Subject Area
Structure

N

Applicant: PADEN M. DUNAGAN
Tax Parcel #: 15025 000002
Location: 3263 TANNERS MILL ROAD, GAINESVILLE, GA 30507
Commission District 1 **PC Mtg. Date:** 06/05/2023

0 100 200 400
Feet

Zoning Boundary
City Limits
Subject Area

N

DONNEGAN PRIVATE TIMBER BARN

HALL COUNTY, GEORGIA

PROJECT DATA:

GEORGIA BUILDING CODES:
2018 INTERNATIONAL BUILDING CODE (IBC) WITH AMENDMENTS

OCCUPANCY CLASSIFICATION
INTERNATIONAL BUILDING CODE (IBC)
IBC 311: GROUP S-1, STORAGE

BUILDING CONSTRUCTION CLASSIFICATION
PRIMARY CODE - IBC 602.2: TYPE IV - TYPE IV CONSTRUCTION IN WHICH THE BUILDING ELEMENTS LISTED IN TABLE 601 ARE OF TIMBER MATERIALS.

ALLOWABLE HEIGHT IN FEET ABOVE GRADE
CODE: IBC TABLE 504.3, ALLOWABLE HEIGHT IN FEET ABOVE GRADE PLANE.
GROUP S-1 32 FEET ALLOWED

ALLOWABLE NUMBER STORIES ABOVE GRADE
CODE: IBC TABLE 504.4, ALLOWABLE NUMBER OF STORIES ABOVE GRADE PLANE.
GROUP S-1 1 STORIES ALLOWED

ALLOWABLE AREA IN SQUARE FEET
CODE: IBC TABLE 506.2, ALLOWABLE AREA FACTOR IN SQUARE FEET.
GROUP S-1 8000 S.F. 12,000 SQUARE FEET ALLOWED

NUMBER OF OCCUPANTS
BUILDING TOTAL: 8 OCCUPANTS

FIRE PROTECTION SYSTEMS
MODIFICATION NUMBER: IBC 2018 09.
SECTION: IBC 903.2.9. GROUP A-3
NO SPRINKLER SYSTEM REQUIRED

SMOKE AND HEAT VENTS
IBC 910.2.1 GROUP A-3 GROUP A-3 OCCUPANCY LESS THAN 15,000SF - SMOKE VENTS ARE NOT REQUIRED.

FOUNDATION DRAIN
CODE:IBC CHAPTER 18
IBC 1805.4.2 FOUNDATION DRAIN. A DRAIN SHALL BE PLACED AROUND THE PERIMETER OF A FOUNDATION THAT CONSISTS OF GRAVEL OR CRUSHED STONE CONTAINING NOT MORE THAN 10-PERCENT MATERIAL PASSED THROUGH A NO. 4 SIEVE. THE DRAIN SHALL EXTEND A MINIMUM OF 12 INCHES BEYOND THE OUTSIDE EDGE OF THE FOOTING. THE THICKNESS SHALL BE SUCH THAT THE BOTTOM OF THE DRAIN IS NOT HIGHER THAN THE BOTTOM OF THE BASE UNDER THE FLOOR, AND THAT THE TOP OF THE DRAIN IS NOT LESS THAN 6 INCHES ABOVE THE TOP OF THE FOOTING. THE TOP OF THE DRAIN SHALL BE COVERED WITH AN APPROVED FILTER MEMBRANE MATERIAL. WHERE A DRAIN TILE OR PERFORATED PIPE IS USED, THE INVERT OF THE PIPE OR TILE SHALL NOT BE HIGHER THAN THE FLOOR ELEVATION. THE TOP OF JOINTS OR THE TOP OF PERFORATIONS SHALL BE PROTECTED WITH AN APPROVED FILTER MEMBRANE MATERIAL. THE PIPE OR TILE SHALL BE PLACED ON NOT LESS THAN 2 INCHES OF GRAVEL OF CRUSHED STONE COMPLYING WITH SECTION 1805.4.1, AND SHALL BE COVERED WITH NOT LESS THAN 6 INCHES OF THE SAME MATERIAL.

1805.4.3 DRAINAGE DISCHARGE. THE FLOOR BASE AND FOUNDATION PERIMETER DRAIN SHALL DISCHARGE BY GRAVITY OR MECHANICAL MEANS INTO AN APPROVED DRAINAGE SYSTEM THAT COMPLIES WITH THE INTERNATIONAL PLUMBING CODE.

PROJECT: PROJECT COMPLIES WITH THE CODE CRITERIA.

GENERAL NOTES

1. MAXIMUM TRAVEL DISTANCE TO EXIT - 70FT. (IBC TABLE 1017.2)
2. MINIMUM CLEAR OPENING OF EXITS DOORS - 36 INCHES (ADA)
3. EGRESS WITH PER PERSON SERVED - 0.20 LEVEL (TABLE 1005.3.2)
4. FIRE BARRIERS NOT REQUIRED: IBC 903.2.9,
5. PROJECT DOES HOT HAVE AN ATTIC, UNDER-FLOOR OR OTHER CONCEALED SPACES.
7. ALL INTERIOR AND EXTERIOR COLORS AND FINISHES PER OWNER

FRAMING PERSPECTIVE

SCOPE OF WORK SUMMARY

THIS PROJECT IS TO CONSTRUCT A TIMBER-FRAMED BARN FOR EVENTS.

THERE IS NO EXISTING RESIDENCE ON THE PROPERTY. THE NEW BARN STRUCTURE WILL NOT INCLUDE BATHROOM.

PROJECT DIRECTORY

STRUCTURAL ENGINEER:
DUNLAP ASSOCIATES CONSULTING ENGINEERS
48 BERKELEY ROAD
AVONDALE ESTATES
678-581-1000
WWW.DA-ENGINEERS.COM
CONTACT: STEVE DUNLAP, P.E.

CONTRACTOR:
WOODSTAR TIMBER PRODUCTS, INC.
EMAIL: woodstartimber@gmail.com
706-768-5025
CONTACT: DARRYL SIMMS

LIST OF DRAWINGS

DWG #	DRAWING NAME
ARCHITECTURAL	
T1	COVER SHEET
STRUCTURAL	
S0.1	NOTES
S1.0	FOUNDATION PLAN
S1.1	ROOF FRAMING PLAN
S1.2	FRAMING ELEVATIONS
S	

EGRESS BASED UPON OCCUPANT LOAD AND COMMON PATH OF EGRESS TRAVEL DISTANCE

IBC TABLE 1006.2.1 SPACES WITH ONE EXIT OR EXIT ACCESS DOORWAY

GROUP S-1 8 OCCUPANTS 100 FT. EGRESS TRAVEL WITHOUT SPRINKLER

PROJECT: GROUP S-1 EGRESS TRAVEL DISTANCE COMPLIES WITH THE CODE.

MEANS OF EGRESS ILLUMINATION

IBC 1006.2.1 TWO EXITS OR EXIT ACCESS DOORWAYS FROM ANY SPACE SHALL BE PROVIDED WHERE THE DESIGN OCCUPANT LOAD OR COMMON PATH OF EGRESS TRAVEL DISTANCE EXCEEDS THE VALUES LISTED IN TABLE 1006.2.1. THE CUMULATIVE OCCUPANT LOAD FROM ADJACENT ROOMS, AREAS, OR SPACES SHALL BE DETERMINED IN ACCORDANCE WITH SECTION 1004.2.

IBC TABLE 1006.2.1 SPACES WITH ONE EXIT OR EXIT ACCESS DOORWAY

OCCUPANCY	MAX OCCUPANT LOAD	MAX. COMMON PATH OF EGRESS TRAVEL WITHOUT SPRINKLER SYSTEM
GROUP S-1	8	OL < 30 = 100 FEET

Copyright © 2021, DA

Revisions		
0	12/29/21	FOR PERMIT

Seal:

GEORGIA REGISTERED No. PE21486 PROFESSIONAL 12-5-21 ENGINEER STEVE A. DUNLAP

Drawing Title: COVER SHEET

Released for Construction Date:

Project Title: DONNEGAN PRIVATE BARN
HALL COUNTY, GEORGIA
for WOODSTAR TIMBER

Dunlap Associates
Engineering Services
48 Berkeley Road
Avondale Estates, GA 30002
678-581-1000
salandunlap5@gmail.com

T-1

Copyright © 2021, DA

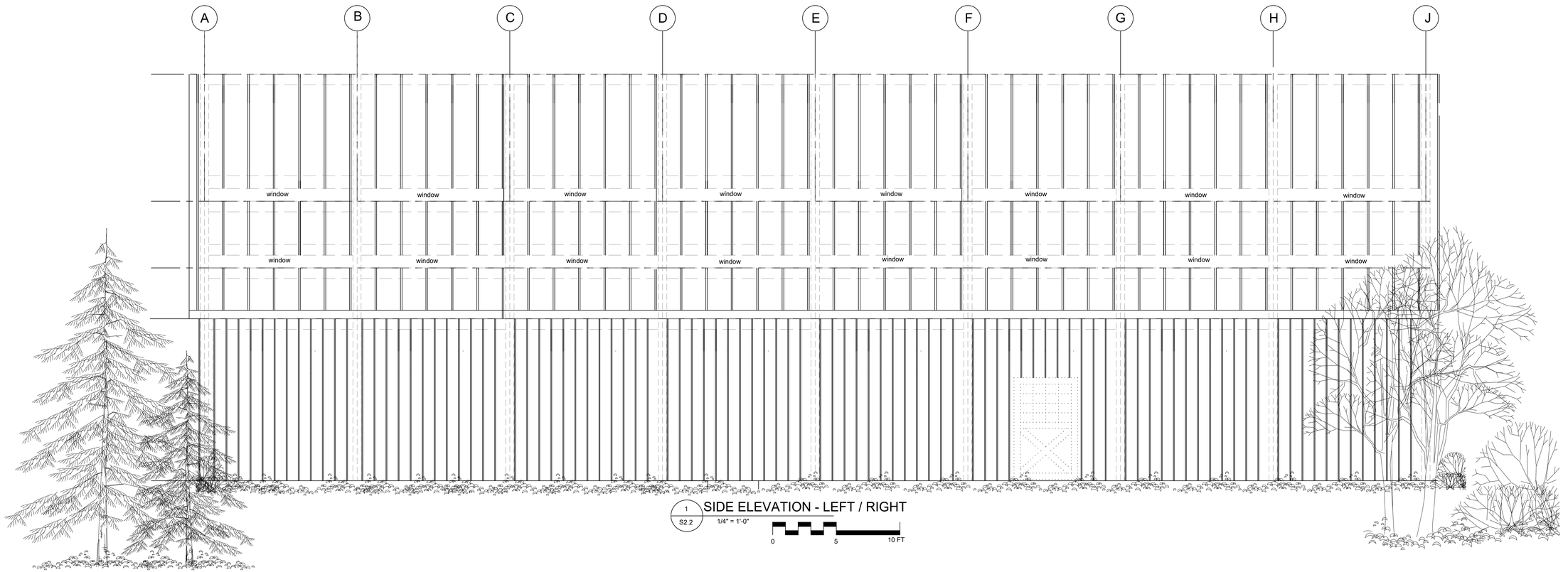

1 / S2.2 SIDE ELEVATION - LEFT / RIGHT

1/4" = 1'-0"

0 5 10 FT

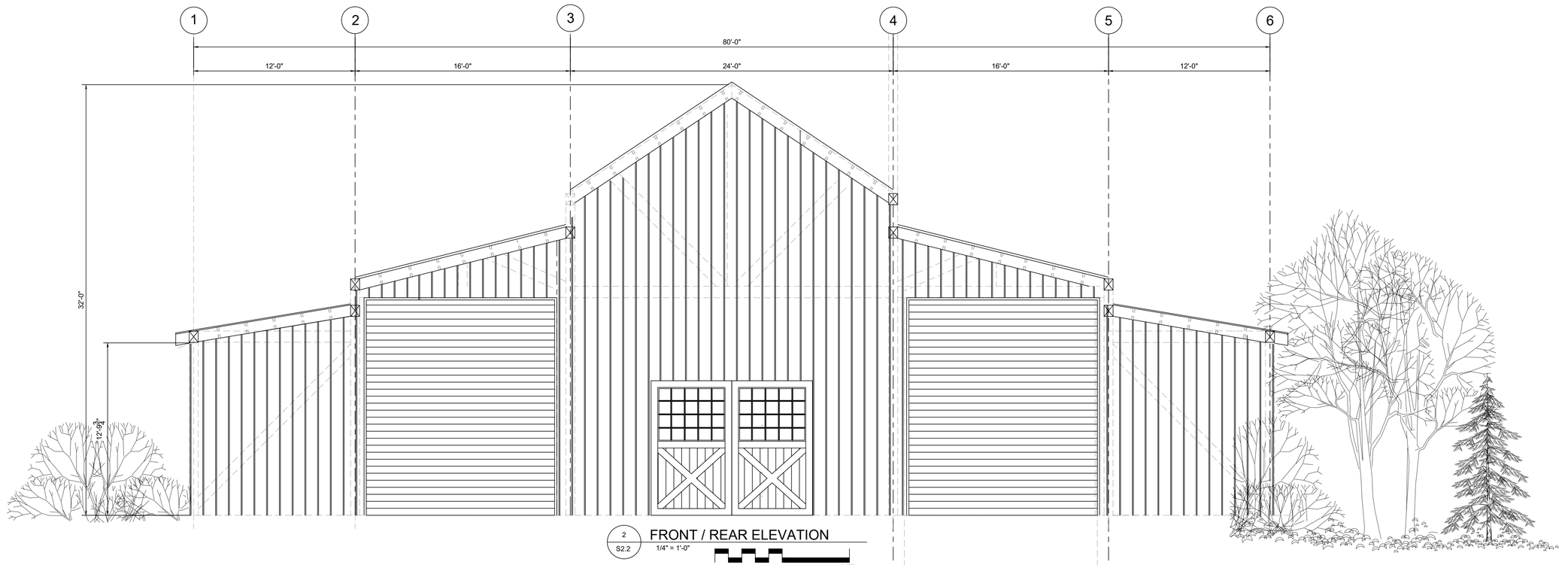

2 / S2.2 FRONT / REAR ELEVATION

1/4" = 1'-0"

0 5 10 FT

Revisions		
0	12/20/21	FOR PERMIT

Seal:

GEORGIA REGISTERED No. PE21486 PROFESSIONAL 12-5-21 ENGINEER STATE A. DUNLAP

Drawing Title: ELEVATIONS

Released for Construction Date:

Project Title: DONNEGAN PRIVATE BARN
HALL COUNTY, GEORGIA
for WOODSTAR TIMBER

Dunlap Associates
Engineering Services
48 Berkeley Road
Avondale Estates, GA 30002
678-581-1000
www.da-engineers.com

S0.1

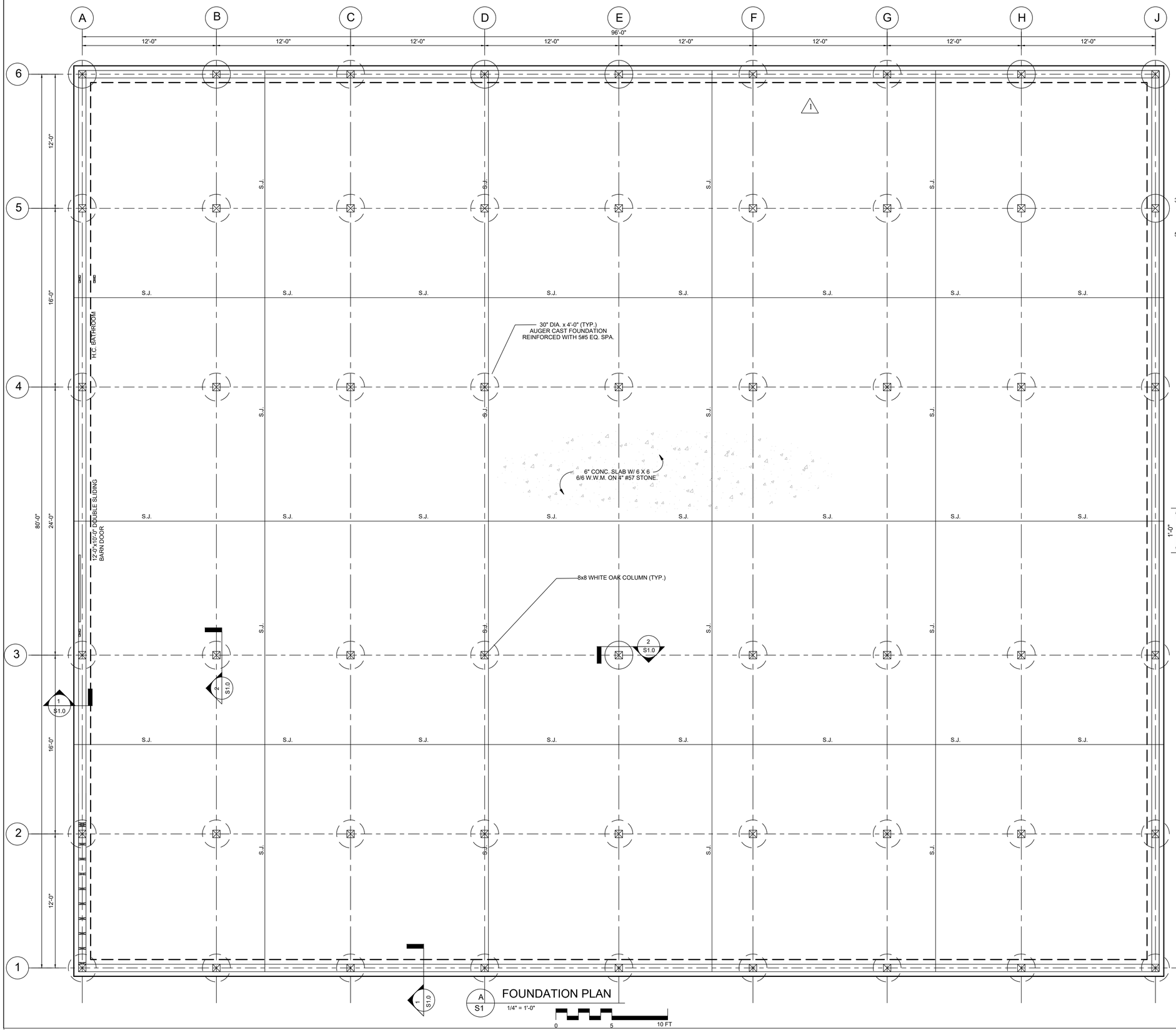

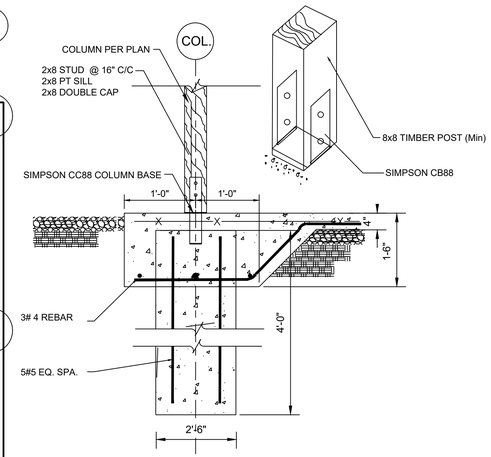

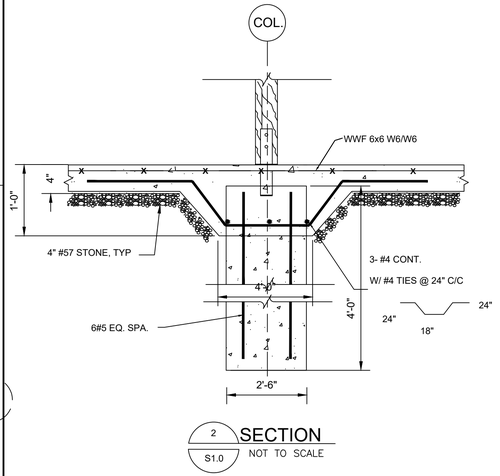

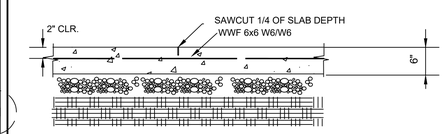

SECTION - SAWN JOINT (S.J.)

Copyright © 2021, DA

Revisions		
1	12/15/21	FOR PERMIT

Seal:

GEORGIA REGISTERED No. PE21486 PROFESSIONAL 12-5-21 ENGINEER STEVE A. DUNLAP

Drawing Title: FOUNDATION PLAN / SECTIONS

Released for Construction Date:

Project Title: DONNEGAN PRIVATE BARN
HALL COUNTY, GEORGIA
for WOODSTAR TIMBER

Dunlap Associates
Engineering Services
48 Berkeley Road
Avondale Estates, GA 30002
678-581-1000
SALANDUNLAP5@GMAIL.COM

S1.0

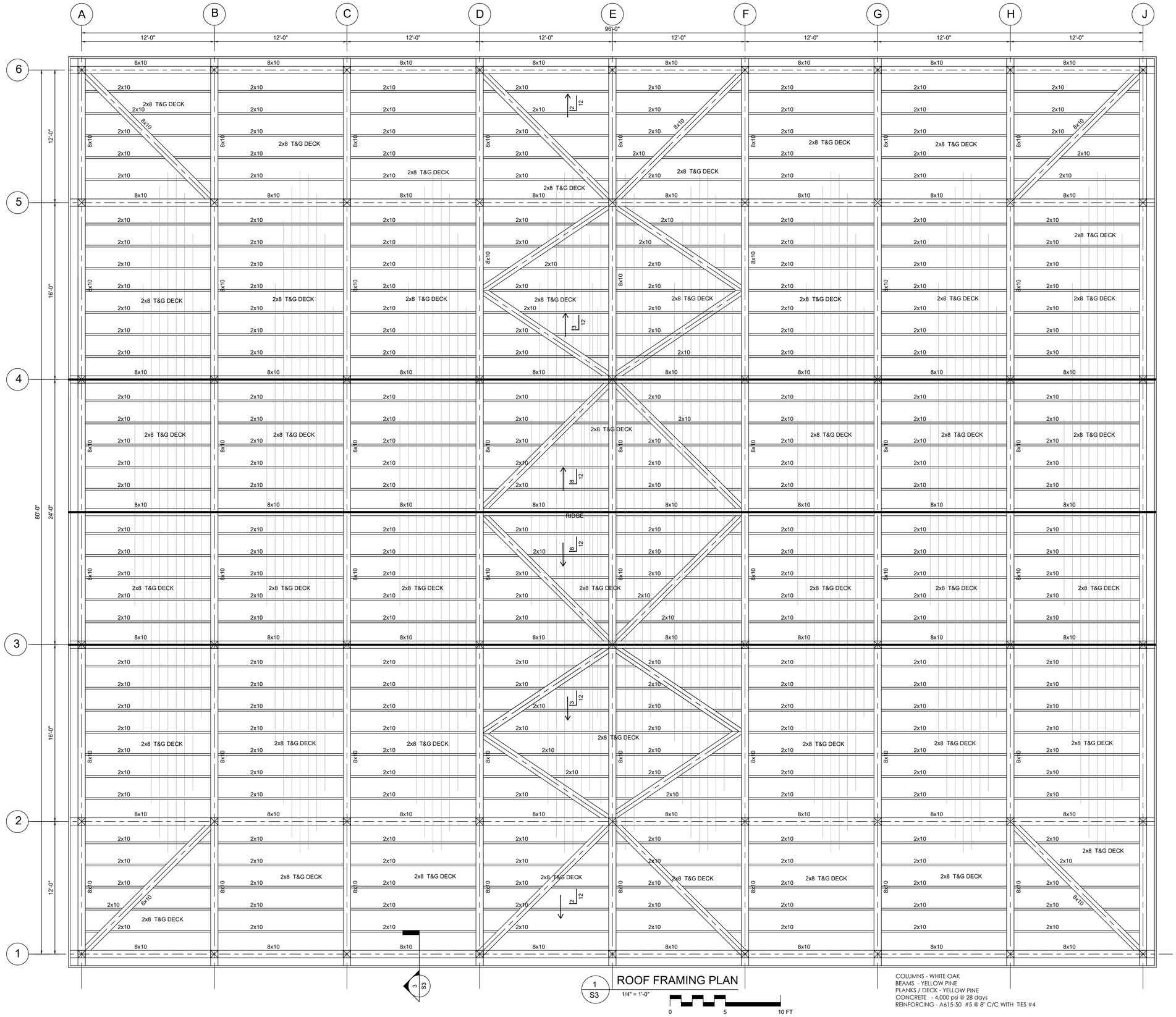

1 / S3 ROOF FRAMING PLAN

1/4" = 1'-0"

0 5 10 FT

COLUMNS - WHITE OAK
BEAMS - YELLOW PINE
PLANKS / DECK - YELLOW PINE
CONCRETE - 4,000 psi @ 28 days
REINFORCING - A615-50 #5 @ 8" C/C WITH TIES #4

Copyright © 2021, DA

Revisions		
0	12-20-21	FOR PERMIT

Seal:

GEORGIA REGISTERED No. PE21486 PROFESSIONAL 12-5-21 ENGINEER STEVE A. DUNLAP

Drawing Title: ROOF FRAMING PLAN

Released for Construction Date:

Project Title: DONNEGAN PRIVATE BARN
HALL COUNTY, GEORGIA
for WOODSTAR TIMBER

Dunlap Associates
Engineering Services
48 Berkeley Road
Avondale Estates, GA 30002
678-581-1000
www.da-engineers.com

S1.1

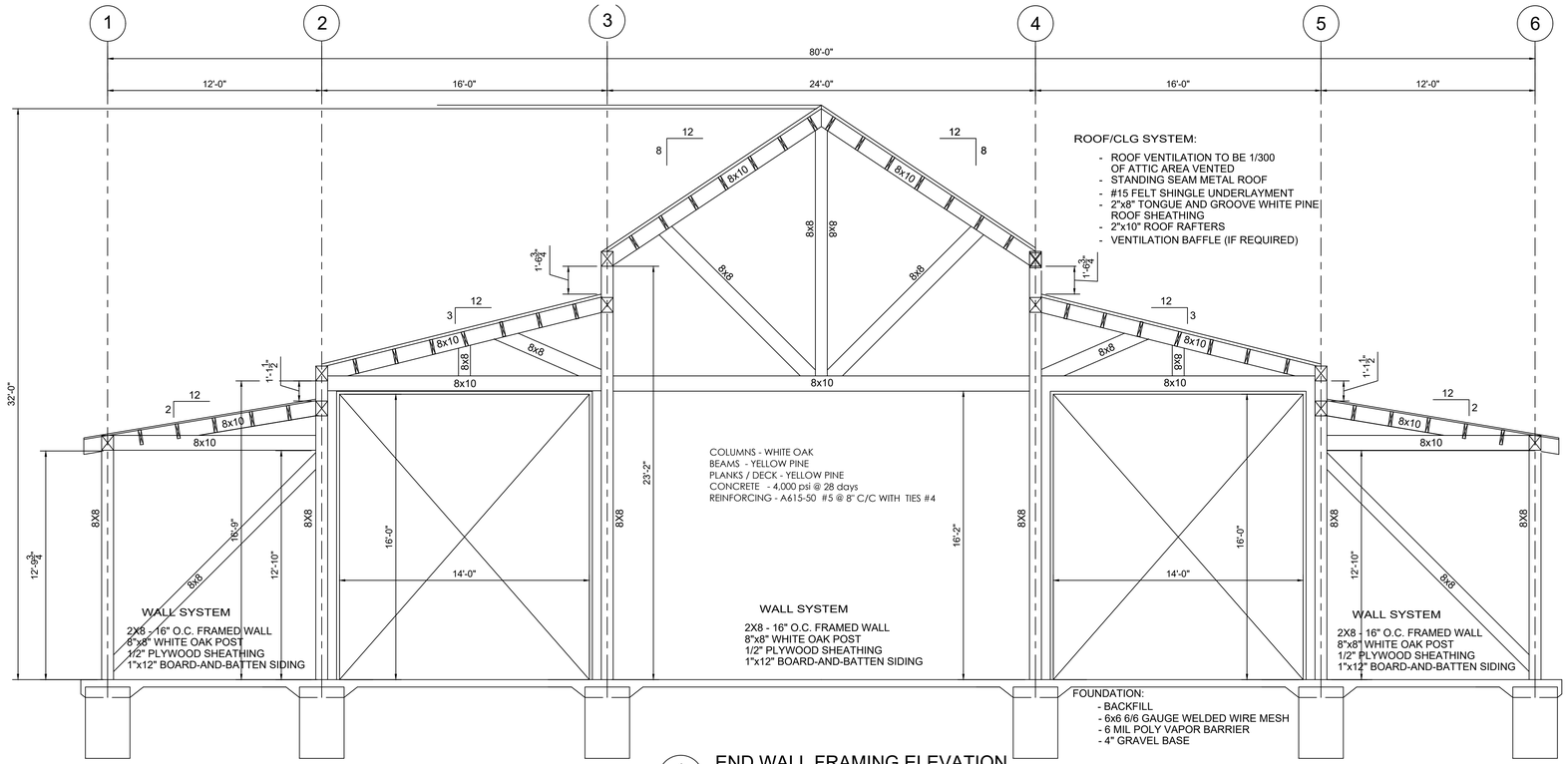

1 / S4 END WALL FRAMING ELEVATION

1/4" = 1'-0"

0 5 10 FT

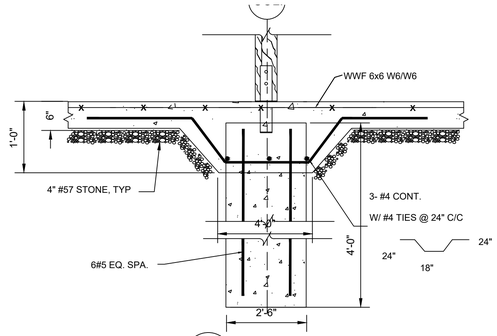

4 / S4 SECTION

NOT TO SCALE

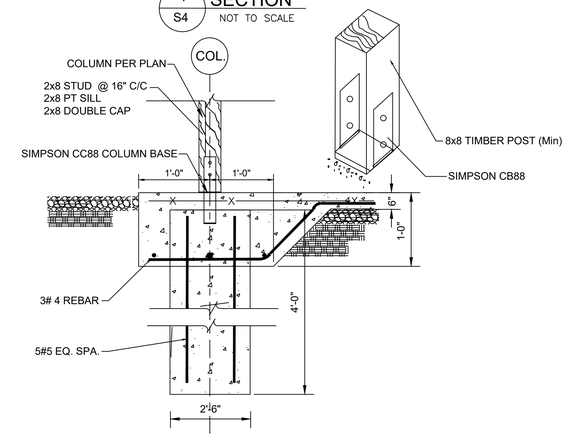

3 / S4 SECTION

NOT TO SCALE

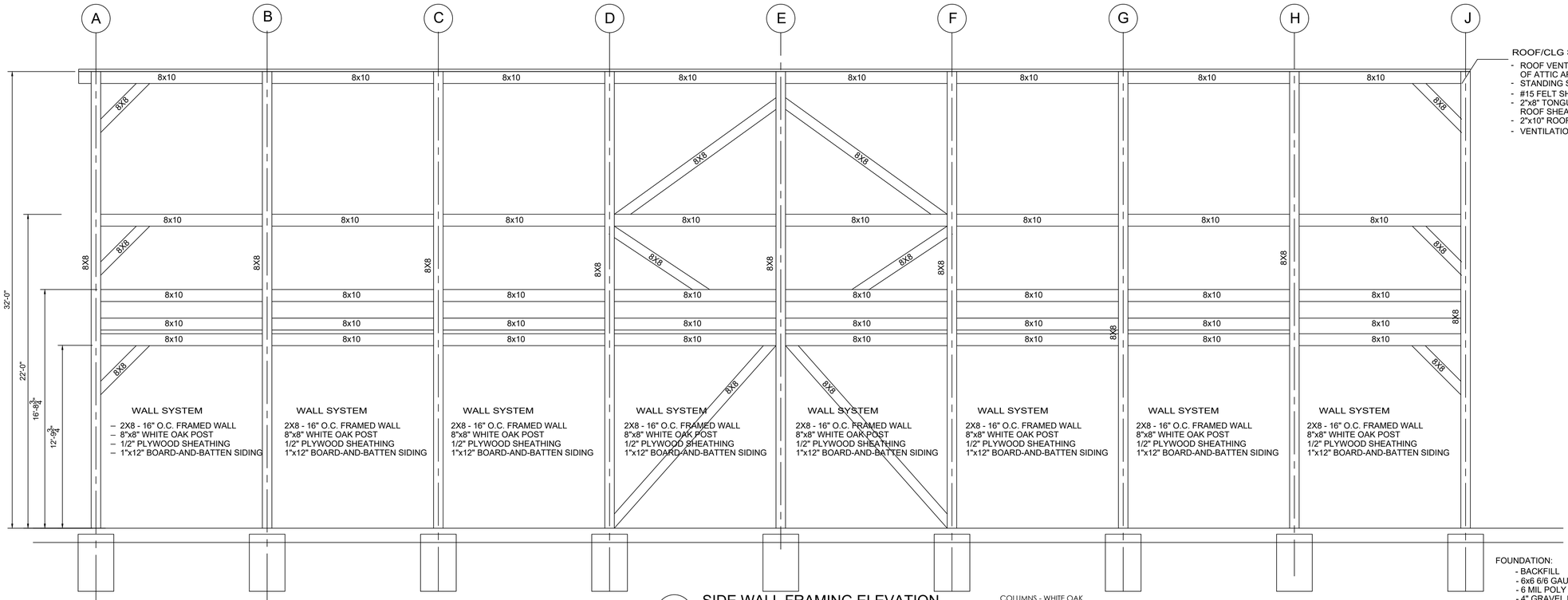

2 / S4 SIDE WALL FRAMING ELEVATION

1/4" = 1'-0"

COLUMNS - WHITE OAK
BEAMS - YELLOW PINE
PLANKS / DECK - YELLOW PINE
CONCRETE - 4,000 psi @ 28 days
REINFORCING - A615-50 #5 @ 8" C/C WITH TIES #4

Copyright © 2021, DA

Revisions	12-20-21	FOR PERMIT
0		

Seal:

GEORGIA REGISTERED No. PE21486 PROFESSIONAL 12-5-21 ENGINEER STEVE A. DUNLAP

Drawing Title: SIDE ELEVATION

Released for Construction Date:

Project Title: DONNEGAN PRIVATE BARN
HALL COUNTY, GEORGIA
for WOODSTAR TIMBER

Dunlap Associates
Engineering Services
48 Berkeley Road
Avondale Estates, GA 30002
678-581-1000
SALANDUNLAP5@GMAIL.COM

S1.2

Copyright © 2021, DA

TABLE 2304.9.1
FASTENING SCHEDULE

CONNECTION	FASTENING[a,b,h]	LOCATION
1. Joist to sill or girder	3 - 8d common 3 - 3" × 0.131" nails 3 - 3" 14 gage staples	toenail
2. Bridging to joist	2 - 8d common 2 - 3" × 0.131" nails 2 - 3" 14 gage staples	toenail each end
3. 1" × 6" subfloor or less to each joist	2 - 8d common	face nail
4. Wider than 1" × 6" subfloor to each joist	3 - 8d common	face nail
5. 2" subfloor to joist or girder	2 - 16d common	blind and face nail
6. Sole plate to joist or blocking	16d at 16" o.c. 3" × 0.131" nails at 8" o.c. 3" 14 gage staples at 12" o.c.	typical face nail
Sole plate to joist or blocking at braced wall panel	3 - 16d at 16" 4 - 3" × 0.131" nails at 16" 4 - 3" 14 gage staples per 16"	braced wall panels
7. Top plate to stud	2 - 16d common 3 - 3" × 0.131" nails 3 - 3" 14 gage staples	end nail
8. Stud to sole plate	4 - 8d common 4 - 3" × 0.131" nails 3 - 3" 14 gage staples	toenail
	2 - 16d common 3 - 3" × 0.131" nails 3 - 3" 14 gage staples	end nail
9. Double studs	16d at 24" o.c. 3" × 0.131" nail at 8" o.c. 3" 14 gage staple at 8" o.c.	face nail
10. Double top plates	16d at 16" o.c. 3" × 0.131" nail at 12" o.c. 3" 14 gage staple at 12" o.c.	typical face nail
Double top plates	8-16d common 12 - 3" × 0.131" nails 12 - 3" 14 gage staples	lap splice
11. Blocking between joists or rafters to top plate	3 - 8d common 3 - 3" × 0.131" nails 3 - 3" 14 gage staples	toenail
12. Rim joist to top plate	8d at 6" (152 mm) o.c. 3" × 0.131" nail at 6" o.c. 3" 14 gage staple at 6" o.c.	toenail
13. Top plates, laps and intersections	2 - 16d common 3 - 3" × 0.131" nails 3 - 3" 14 gage staples	face nail
14. Continuous header, two pieces	16d common	16" o.c. along edge
15. Ceiling joists to plate	3 - 8d common 5 - 3" × 0.131" nails 5 - 3" 14 gage staples	toenail
16. Continuous header to stud	4 - 8d common	toenail

(continued)

TABLE 2304.9.1—continued
FASTENING SCHEDULE

CONNECTION	FASTENING[a,b]	LOCATION
17. Ceiling joists, laps over partitions (see Section 2308.10.4.1, Table 2308.10.4.1)	3 - 16d common minimum, Table 2308.10.4.1 4 - 3" × 0.131" nails 4 - 3" 14 gage staples	face nail
18. Ceiling joists to parallel rafters (see Section 2308.10.4.1, Table 2308.10.4.1)	3 - 16d common minimum, Table 2308.10.4.1 4 - 3" × 0.131" nails 4 - 3" 14 gage staples	face nail
19. Rafter to plate (see Section 2308.10.1, Table 2308.10.1)	3 - 8d common 3 - 3" × 0.131" nails 3 - 3" 14 gage staples	toenail
20. 1" diagonal brace to each stud and plate	2 - 8d common 2 - 3" × 0.131" nails 2 - 3" 14 gage staples	face nail
21. 1" × 8" sheathing to each bearing wall	2 - 8d common	face nail
22. Wider than 1"× 8" sheathing to each bearing	3 - 8d common	face nail
23. Built-up corner studs	16d common 3" × 0.131" nails 3" 14 gage staples	24" o.c. 16" o.c. 16" o.c.
24. Built-up girder and beams	20d common 32" o.c. 3" × 0.131" nail at 24" o.c. 3" 14 gage staple at 24" o.c.	face nail at top and bottom staggered on opposite sides
	2 - 20d common 3 - 3" × 0.131" nails 3 - 3" 14 gage staples	face nail at ends and at each splice
25. 2" planks	16d common	at each bearing
26. Collar tie to rafter	3 - 10d common 4 - 3" × 0.131" nails 4 - 3" 14 gage staples	face nail
27. Jack rafter to hip	3 - 10d common 4 - 3" × 0.131"nails 4 - 3" 14 gage staples	toenail
	2 - 16d common 3 - 3" × 0.131" nails 3 - 3" 14 gage staples	face nail
28. Roof rafter to 2-by ridge beam	2 - 16d common 3 - 3" × 0.131" nails 3 - 3" 14 gage staples	toenail
	2 - 16d common 3 - 3" × 0.131" nails 3 - 3" 14 gage staples	face nail
29. Joist to band joist	3 - 16d common 5 - 3" × 0.131" nails 5 - 3" 14 gage staples	face nail

(continued)

TABLE 2304.9.1—continued
FASTENING SCHEDULE

CONNECTION	FASTENING[a,b]	LOCATION
30. Ledger strip	3 - 16d common 4 - 3" × 0.131" nails 4 - 3" 14 gage staples	face nail
31. Wood structural panels and particleboard:[b] Subfloor, roof and wall sheathing (to framing):	½" and less	6d[e,i] 2 ⅜" × 0.113" nail[e] 1 ¾" 16 gage[g] 8d[e] or 6d[e] 2 ⅜" × 0.113" nail[e] 2" 16 gage[g] 8d[e]
	19/32" to ¾"	
	¾" to 1"	
Single Floor (combination subfloor-underlayment to framing):	1 ⅛" to 1 ¼"	10d[d] or 8d[e]
	¾" and less	6d[e]
	⅞" to 1"	8d[e]
	1 ⅛" to 1 ¼"	10d[d] or 8d[e]
32. Panel siding (to framing)	½" or less	6d[f]
	⅝"	8d[f]
33. Fiberboard sheathing:[g]	½"	No. 11 gage roofing nail[h] 6d common nail No. 16 gage staple[j]
	25/32"	No. 11 gage roofing nail[h] 8d common nail No. 16 gage staple[j]
34. Interior paneling	¼"	4d[k]
	⅜"	6d[k]

For SI: 1 inch = 25.4 mm.
a. Common or box nails are permitted to be used except where otherwise stated.
b. Nails spaced at 6 inches on center at edges, 12 inches at intermediate supports except 6 inches at supports where spans are 48 inches or more. For nailing of wood structural panel and particleboard diaphragms and shear walls, refer to Section 2305. Nails for wall sheathing are permitted to be common, box or casing.
c. Common or deformed shank.
d. Common.
e. Deformed shank.
f. Corrosion-resistant siding or casing nail.
g. Fasteners spaced 3 inches on center at exterior edges and 6 inches on center at intermediate supports.
h. Corrosion-resistant roofing nails with ⅜-inch-diameter head and 1½-inch length for ½-inch sheathing and 1 ¾-inch length for ¾-inch sheathing.
i. Corrosion-resistant staples with nominal ⅞-inch crown and 1 ⅛-inch length for ½-inch sheathing and 1 ¼-inch length for ¾-inch sheathing. Panel supports at 16 inches (20 inches if strength axis in the long direction of the panel, unless otherwise marked).
j. Casing or finish nails spaced 6 inches on panel edges, 12 inches at intermediate supports.
k. Panel supports at 24 inches. Casing or finish nails spaced 6 inches on panel edges, 12 inches at intermediate supports.
l. For roof sheathing applications, 8d nails are the minimum required for wood structural panels.
m. Staples shall have a minimum crown width of ⅞ inch.
n. For roof sheathing applications, fasteners spaced 4 inches on center at edges, 8 inches at intermediate supports.
o. Fasteners spaced 6 inches on center at edges, 8 inches at intermediate supports for subfloor and wall sheathing and 3 inches on center at edges, 6 inches at intermediate supports for roof sheathing.
p. Fasteners spaced 4 inches on center at edges, 8 inches at intermediate supports.

Product Description

The Heavy Duty (HD) connectors utilize a 1 1/2" diameter connector tube and 6" long, 1" wide expansion pins. The tube is machined from ASTM A500 Grade C steel, and the pins are cast in ASTM A 47M, grade 32510 malleable iron. These are the same materials used to manufacture the standard Timberlinx connector tubes and pins. The following options for connector tubes are available:

- HDA019 – 19" long connector with a slot for one expansion pin at each end (similar to the A095)
- HDA095 – 9 1/2" long half-connector with a slot for one expansion pin and 1 1/4" – 7 UNC internal threads (similar to the A475)
- HDAA095 – 9 1/2" long half-connector with slots for two expansion pins and 1 1/4" – 7 UNC internal threads (similar to the AA675)

An illustration of HDAA095 connector is shown below. The following photo shows the relative sizes of the HDA095 and the A475 tubes with their expansion pins.

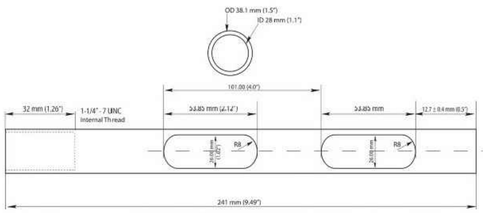

Timberlinx HDAA095 Connector Tube

A475 (left) and HDA095 (right) Assemblies

Product Capacity

The load capacity in tension of the HD connectors has been determined by calculation and limited physical testing. The following limit states are considered.

Tube Tension – The net cross-sectional area of the HD connector tube at the slot is 0.34 in^2, whereas that of the standard (1" diameter) tube is 0.16 in^2. Given that the two tubes are manufactured from the same material, the HD tube has net-section yield capacity in tension that is 2.1 times that of the standard tube.

Pin Dowel Bearing – The HD expansion pin in a 1 9/16" (40mm) drill hole has a dowel-bearing contact area of 4.43 in^2, whereas that of the standard expansion pin in a 1 1/8" drill hole is 2.16 in^2. Thus, the dowel bearing capacity of the HD pin is 2.05 times that of the standard pin.

Pin Bending – Physical testing of the HD and standard expansion pins in four-point pending indicate that the yield moment for the HD pin is 1.45 k-ft, whereas that for the standard pin is 0.34 k-ft, an increase of 4.2 times.

Threaded Rod Tension – The 1 1/4"-7 UNC threaded rod has a net tensile area of 0.969 in^2, whereas that of the 7/8"-9 UNC threaded rod is 0.462 in^2. For rods manufactured of the same material, the 1 1/4" rod is 2.1 times stronger than the 7/8" rod.

Recommendation – Timberlinx recommends that designers use a multiplier of 2.0 on the capacity of the standard connector when designing connections using the corresponding HD connector loaded in tension.

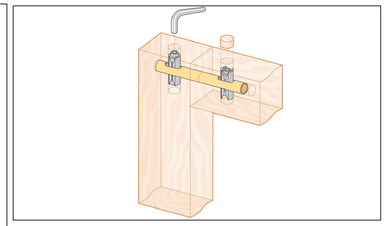

Revisions
0

Seal:

GEORGIA REGISTERED No. PE21486 PROFESSIONAL 12-5-2021 ENGINEER STEVE A. DUNLAP

Drawing Title: NOTES

Released for Construction Date:

Project Title: DONNEGAN PRIVATE BARN
HALL COUNTY, GEORGIA
for WOODSTAR TIMBER

Dunlap Associates
Engineering Services
48 Berkeley Road
Avondale Estates, GA 30002
678-581-1000
www.da-engineers.com

S2.0

Copyright © 2021, DA

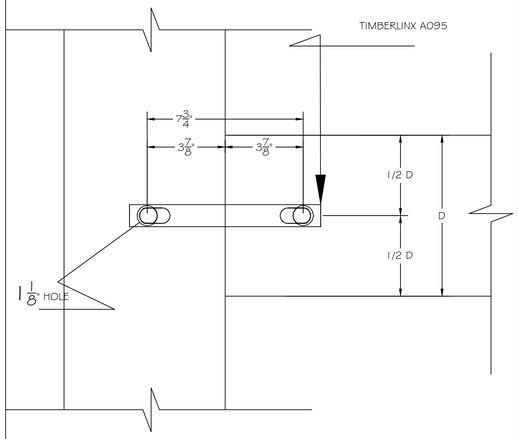

SIDE VIEW

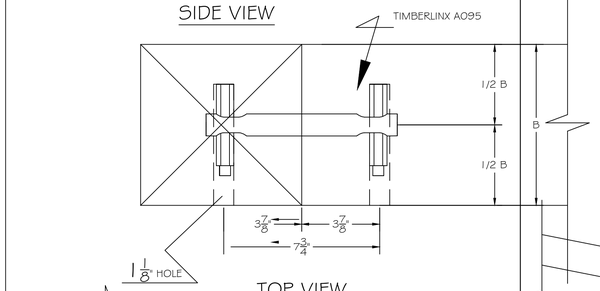

TOP VIEW

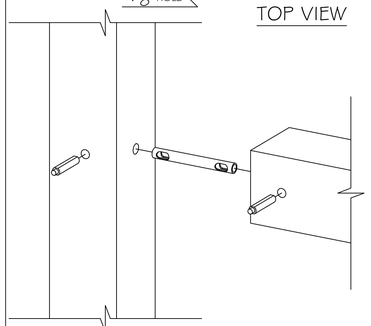

BEAM TO POST

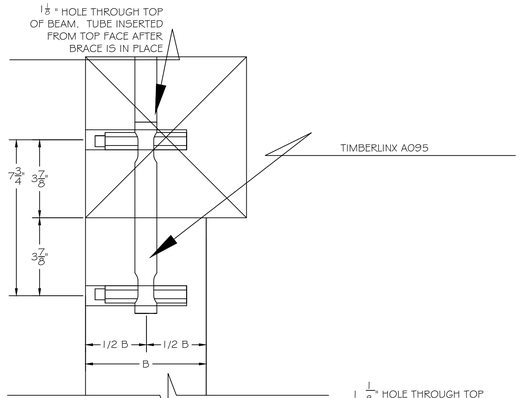

SIDE VIEW

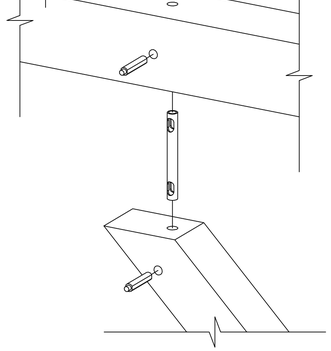

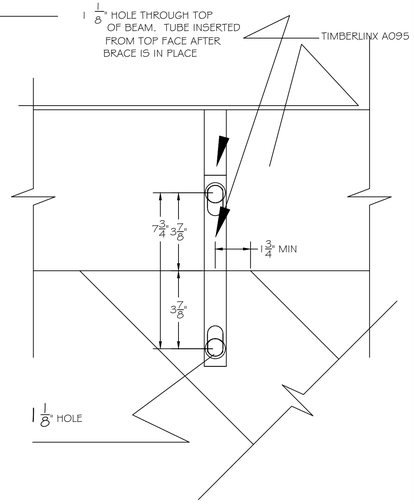

KNEE BRACE TO BEAM

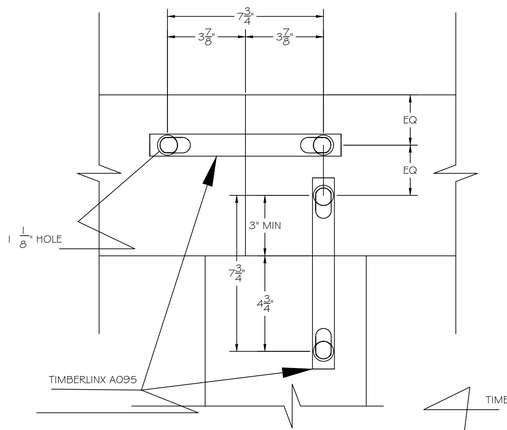

SIDE VIEW

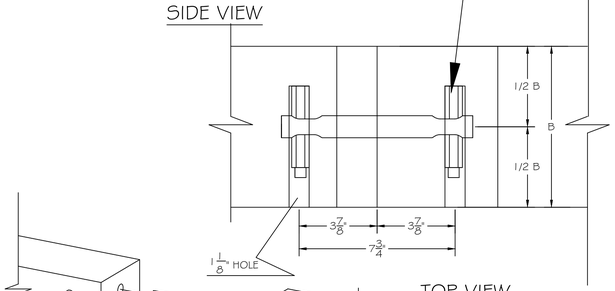

TOP VIEW

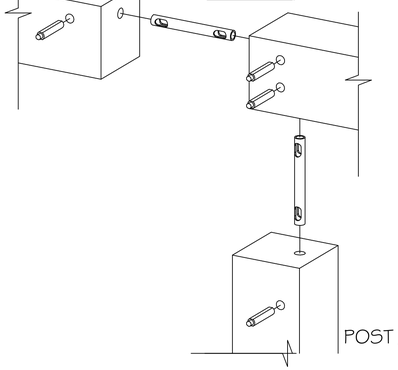

POST / PLATE LAP

Revisions
0

Seal:

GEORGIA REGISTERED No. PE21488 PROFESSIONAL 12-5-21 ENGINEER STEVE A. DUNLAP

Drawing Title: CONNECTIONS

Released for Construction Date:

Project Title: DONNEGAN PRIVATE BARN
HALL COUNTY, GEORGIA
for WOODSTAR TIMBER

Dunlap Associates
Engineering Services
48 Berkeley Road
Avondale Estates, GA 30002
678-581-1000
www.da-engineers.com

S2.1

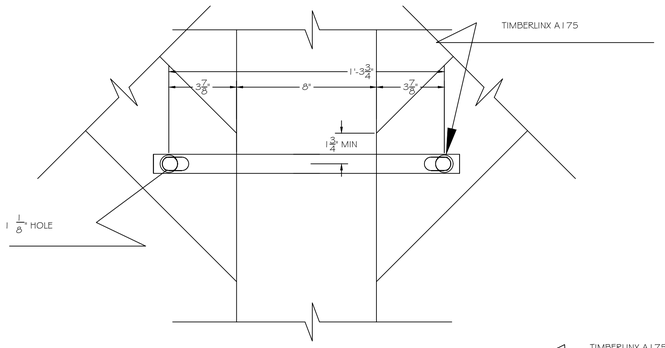

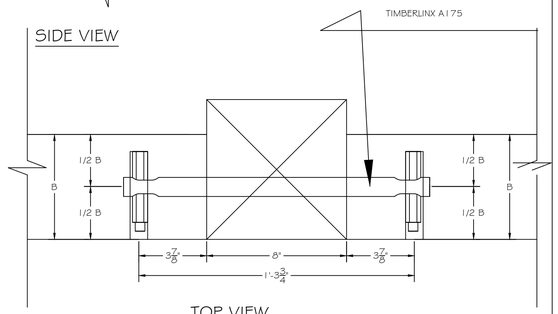

TOP VIEW

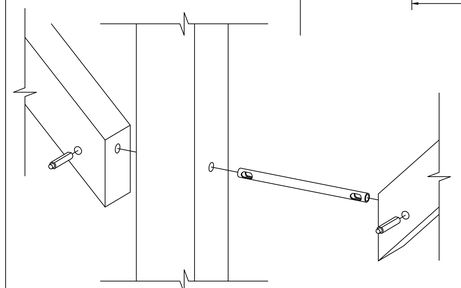

PAIR OF KNEE BRACES TO POST

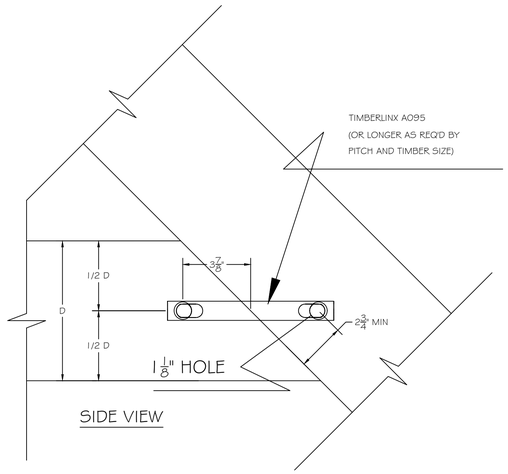

SIDE VIEW

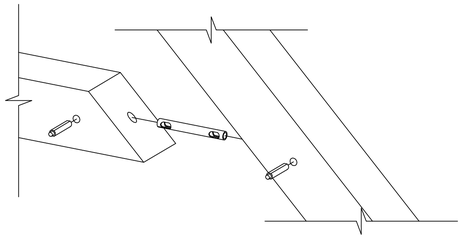

COLLAR TIE TO RAFTER

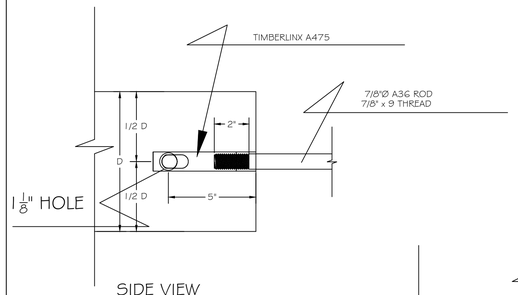

SIDE VIEW

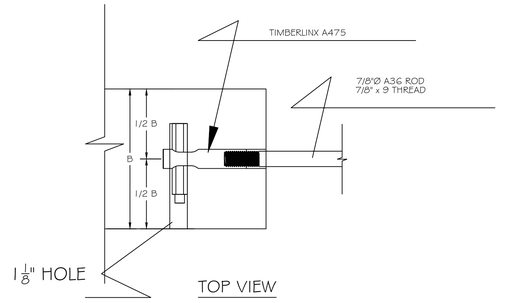

TOP VIEW

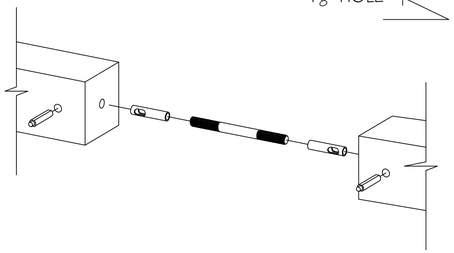

TENSION ROD CONNECTOR

Copyright © 2021, DA

Revisions
0

Seal:

GEORGIA REGISTERED No. PE21486 PROFESSIONAL 12-5-21 ENGINEER STEVE A. DUNLAP

Drawing Title: CONNECTIONS

Released for Construction Date:

Project Title: DONNEGAN PRIVATE BARN
HALL COUNTY, GEORGIA
for WOODSTAR TIMBER

Dunlap Associates
Engineering Services
48 Berkeley Road
Avondale Estates, GA 30002
678-581-1000
www.da-engineers.com

S2.2

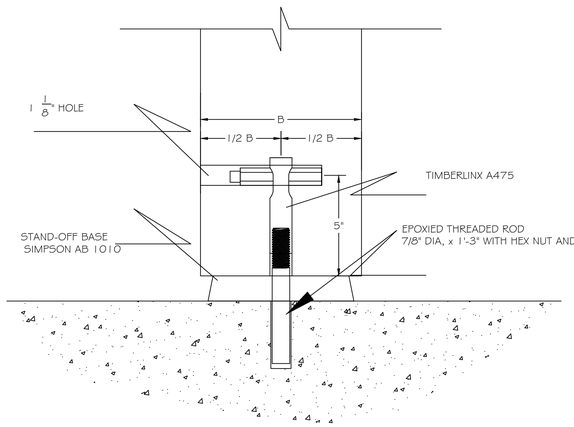

SIDE VIEW

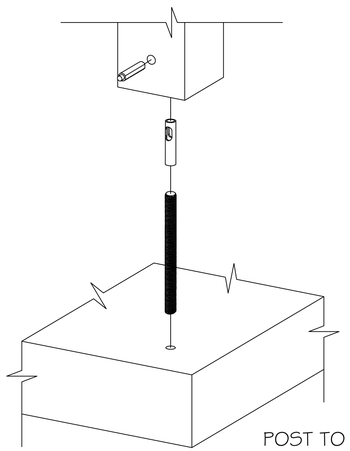

POST TO CONCRETE SLAB

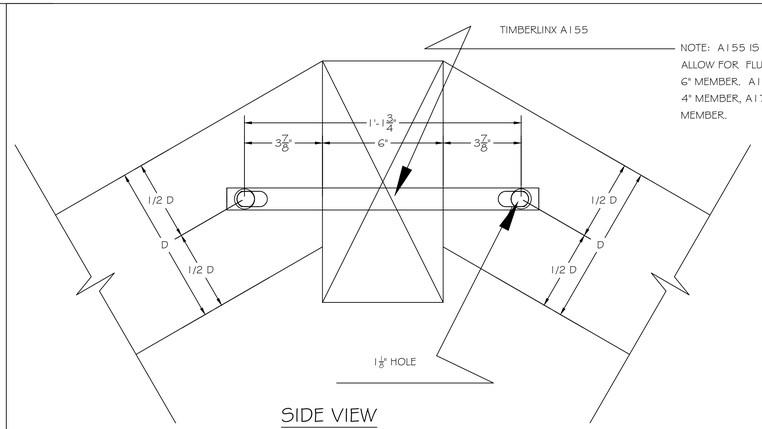

SIDE VIEW

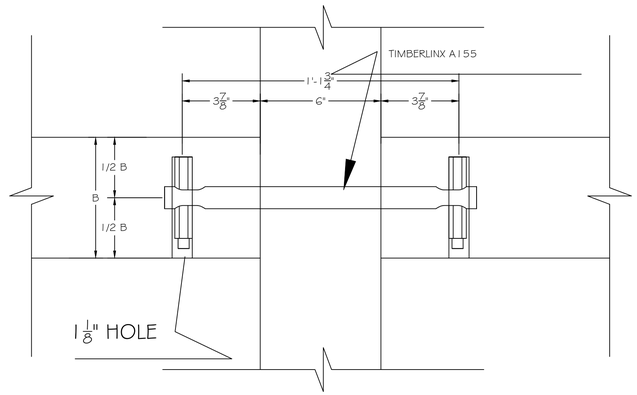

TOP VIEW

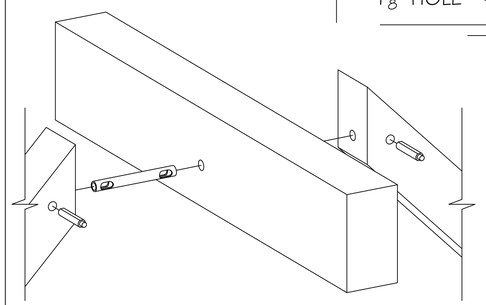

RAFTERS THROUGH RIDGE

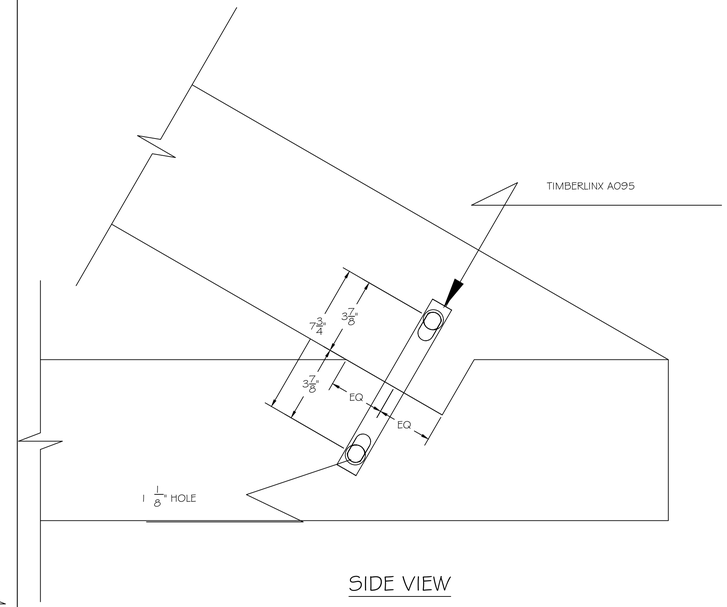

SIDE VIEW

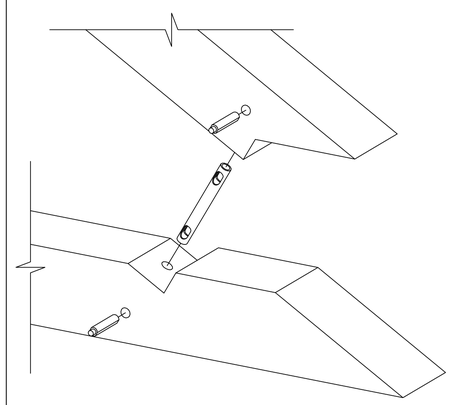

TRUSS HEEL JOINT

Copyright © 2021, DA

Revisions
0

Seal:

GEORGIA REGISTERED No. PE21489 PROFESSIONAL 12-5-21 ENGINEER STEVE A. DUNLAP

Drawing Title: CONNECTIONS

Released for Construction Date:

Project Title: DONNEGAN PRIVATE BARN
HALL COUNTY, GEORGIA
for WOODSTAR TIMBER

Dunlap Associates
Engineering Services
48 Berkeley Road
Avondale Estates, GA 30002
678-581-1000
www.da-engineers.com

S2.3

Copyright © 2021, DA

NOTE: A155 IS DESIGNED TO ALLOW FOR FLUSH JOINTS ON AN 6" MEMBER. A135 WORKS FOR A 4" MEMBER, A175 FOR 8" MEMBER.

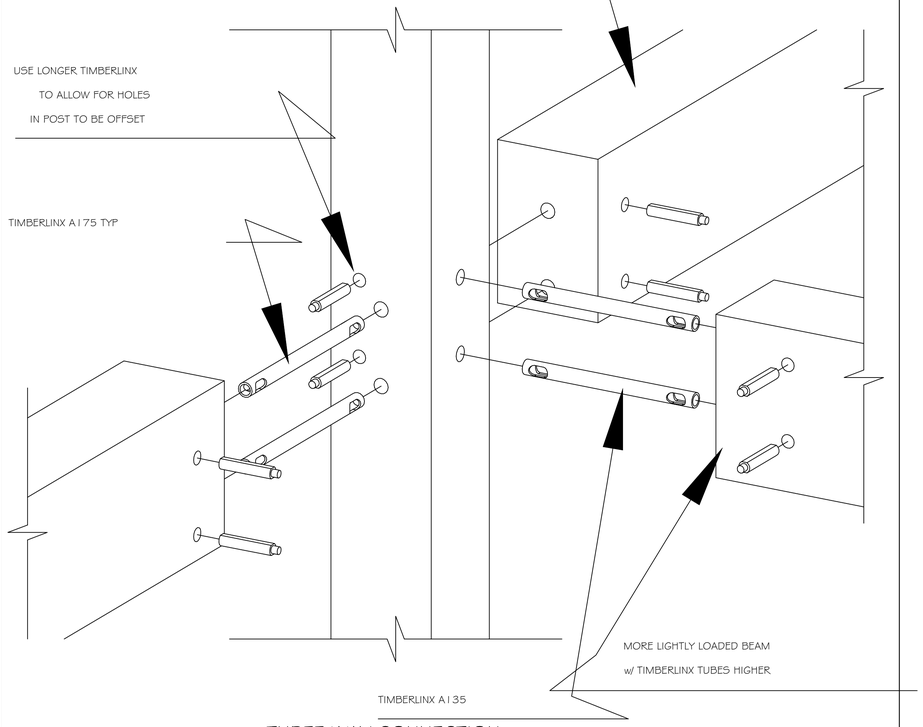

THREE WAY CONNECTION

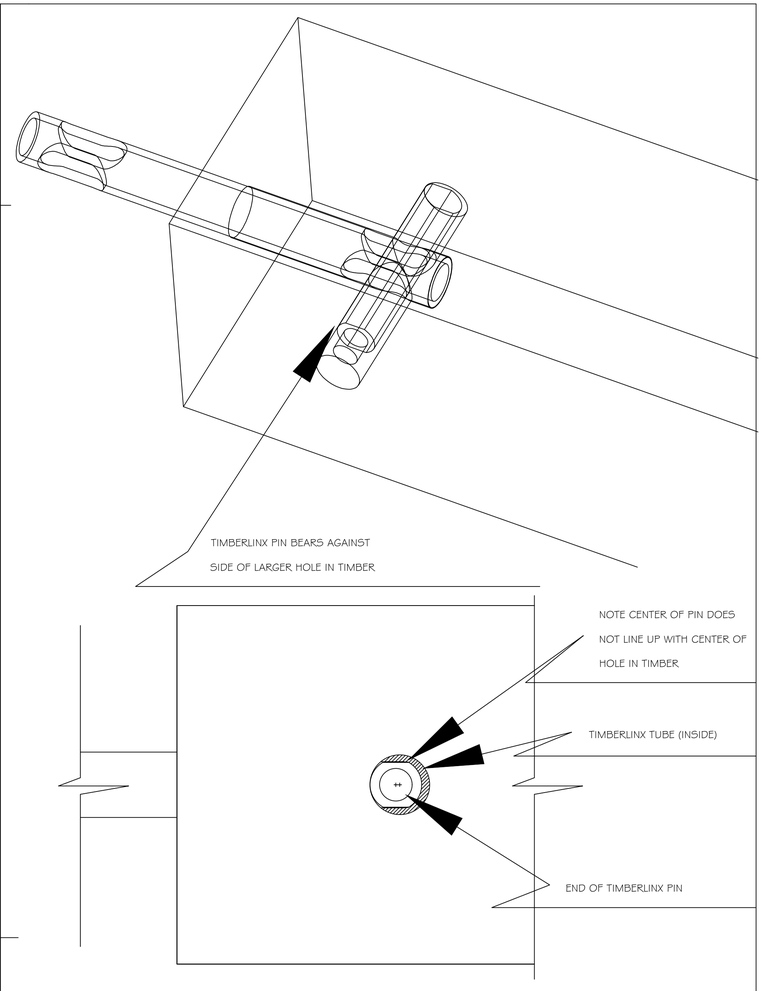

PIN LOCATION DETAIL

Revisions
0

Seal:

GEORGIA REGISTERED No. PE21488 PROFESSIONAL 12-5-21 ENGINEER STEVE A. DUNLAP

Drawing Title: CONNECTIONS

Released for Construction Date:

Project Title: DONNEGAN PRIVATE BARN
HALL COUNTY, GEORGIA
for WOODSTAR TIMBER

Dunlap Associates
Engineering Services
48 Berkeley Road
Avondale Estates, GA 30002
678-581-1000
www.da-engineers.com

S2.4

Anael Dominguez (CDI: Planning)

From: Emily McGahee (Environmental Health)
Sent: Wednesday, May 17, 2023 12:41 PM
To: Anael Dominguez (CDI: Planning); Randi Doveton (CDI: Planning)
Cc: Kelly Hairston (Environmental Health); Chad Harper (Environmental Health)
Subject: HCPC Tentative Agenda 6.5.23

Please find Environmental Health comments below:

Item 1, 3621 Reece Circle, Whitlow: Must meet all Environmental Health residential septic system permitting requirements.

Items 2A/B, 3263 Tanners Mill Road, Dunagan: A detailed business plan must be submitted to Hall County Environmental Health for review. Additional items septic system modification/expansion may be required after review of business plan. Tourist Accommodation permit/plan review and/or Food Service permit/plan review may be required after review of business plan.

Items 3A/B/C, 4375 Peckerwood Road, Gregory: A detailed business plan must be submitted to Hall County Environmental Health for review. Additional items septic system modification/expansion may be required after review of business plan. Food Service permit/plan will be required.

Item 4, 4033 Hidden Hollow Drive: Must meet all Environmental Health residential septic system permitting requirements. A copy of recorded plat showing property in current configuration must be submitted at time of permit application.

Item 5, 5800 Lanier Islands Pkwy: Must meet all Environmental Health commercial septic system permitting requirements. A detailed business plan must be submitted to Hall County Environmental Health for review.

Item 6, Deaton Creek Pkwy, Public Works: No comment

Item 7, Code Amendment: No comment

Emily McGahee
Hall County Environmental Health
Hall County Government Center
2875 Browns Bridge Road
Mailing: PO Box 5901
Gainesville, GA 30504
(770) 531-3973
(770) 531-6767 (fax)

http://dph.georgia.gov/environmental-health (State Website)
http://www.phdistrict2.org/HallCounty.htm (District Website)
http://www.hallcounty.org/devserv/environmental.asp (County Website & Forms)

Anael Dominguez (CDI: Planning)

From: Peevy, Jonathan <jpeevy@dot.ga.gov>
Sent: Thursday, May 11, 2023 4:33 PM
To: Anael Dominguez (CDI: Planning)
Cc: Niebauer, Parker J
Subject: RE: Tentative Planning Agenda for June 5, 20223

CAUTION: This email originated from outside of the organization. Do not click links or open attachments unless you recognize the sender and know the content is safe.

Anael,
The following will require GDOT coordination.

- 3263 Tanners Mill Road
- 5800 Lanier Islands Parkway

Thank you,

Jonathan Peevy, P.E.
Assistant District Traffic Engineer

Georgia Department of Transportation

District 1 Traffic Operations
1475 Jesse Jewell Pkwy
Suite 100
Gainesville, GA, 30501
770.533.8276 office

From: Anael Dominguez (CDI: Planning) <adominguez@hallcounty.org>
Sent: Thursday, May 11, 2023 2:27 PM
Subject: Tentative Planning Agenda for June 5, 20223

Good afternoon –

Here is the Tentative Agenda and Maps for the **Monday, June 5, 2023** Hall County Planning Commission Meeting.

Please use the links to review the documents and respond with comments to Hall County Planning and Development. Failure to provide comments in a timely manner may result in the information not being included in the staff report.

When submitting comments, please include the name of the applicant along with the address of the property with the corresponding comment.

Comments are due by **Thursday, May 18th.** Email comments to Randi (rdoveton@hallcounty.org) and Ana (adominguez@hallcounty.org).

CALL TO ORDER

AGENDA REVIEW

APPROVAL OF MINUTES – May 15, 2023

NEW BUSINESS

1. **3621 Reece Circle** | appeal an administrative decision for a hardship manufactured home, as it relates to §17.350.110 on a 1.01± acre tract located on the south side of Reece Circle at its intersection with A L Mangum Road | Zoned R-II; Tax Parcel 15014 000056A | **Proposed use: hardship mobile home** | * Commission District 3 | **Henry Whitlow, applicant.**

2. (A) **3263 Tanners Mill Road | Use Subject to County Commission Approval |** on a 37.28± acre tract located on the east side of Tanners Mill Road approximately 756 feet from its intersection with Weaver Road | Zoned AR-IV; Tax 15025 000002 **| Proposed use: agri-entertainment venue |** **Commission District 1 | **Paden M. Dunagan, applicant.**

   (B) **3263 Tanners Mill Road | Variance |** to allow for outside amplification of voice, music and/or instruments except during a wedding ceremony on a 37.28± acre tract located on the east side of Tanners Mill Road approximately 756 feet from its intersection with Weaver Road | Zoned AR-IV; Tax 15025 000002 **| Proposed use: agri-entertainment venue |** **Commission District 1 | **Paden M. Dunagan, applicant.**

3. (A) **4375 Peckerwood Road | Rezone |** from Residential-I-Low Density (R-I-L) to Agricultural Residential-III (AR-III) on a 5.21± acre tract located on the east side of Peckerwood Road approximately 1,720 feet from its intersection with Gillsville Highway | Zoned R-I-L; Tax Parcel 15003 000136 **| Proposed use: permitted uses in AR-III |** **Commission District 3 | **Carlos & Tara Gregory, applicants.**

   (B) **4375 Peckerwood Road | Use Subject to Planning Commission Approval |** on a 5.21± acre tract located on the east side of Peckerwood Road approximately 1,720 feet from its intersection with Gillsville Highway | Zoned R-I-L; Tax Parcel 15003 000136 **| Proposed use: residential business |** *Commission District 3 **| Carlos & Tara Gregory, applicants.**

   (C) **4375 Peckerwood Road | Variance |** from residential business conditions on a 5.21± acre tract located on the east side of Peckerwood Road approximately 1,720 feet from its intersection with Gillsville Highway | Zoned R-I-L; Tax Parcel 15003 000136 **| Proposed use: residential business |** *Commission District 3 **| Carlos & Tara Gregory, applicants.**

4. **4033 Hidden Hollow Drive | Rezone |** from Planned Residential Development (PRD) to Agricultural-Residential-III (AR-III) on a 4.36± acre tract located on the west side of Hidden Hollow Drive approximately 718 feet from its intersection with Hidden Hollow Terrace | Zoned PRD; Tax Parcel 10098 000125 **| Proposed use: permitted uses in AR-III |** ** Commission District 2 **| Bourdua REI, LLC/Brian Bourdua, applicant.**

5. **5800 Lanier Islands Parkway | Rezone |** from Planned Commercial Development (PCD) Conditional to Planned Commercial Development (PCD) to amend existing conditions on a 3.57± acre tract located on the south side of Lanier Islands Parkway at its intersection with Beards Road | Zoned PCD; Tax Parcel 07329 004012 **| Proposed use: vehicle sales and construction equipment rental & sales |** ** Commission District 2 **| Vacutek, LLC, applicant.**

6. **Deaton Creek Parkway | Change a Segment of a Road Name** | on the official Hall County road map from Deaton Creek Parkway to Deaton Way; being a ±0.096 mile section between Friendship Road and Thompsons Mill Road | ** Commission District 1 | **Hall County Public Works Staff, applicant.**

7. Public Hearing to Amend Title 17 of the Official Code of Hall County, Georgia, to comply with O.C.G.A. §§ 36-66-1 through 36-66-6, commonly known as the Zoning Procedures Law, as amended by the adoption of HB 1405; to repeal conflicting ordinances and resolutions; and for other purposes. ** | **Hall County Planning Staff, applicant.**
   - **Pending Documents**

*The Planning Commission's decision will be the final action taken unless appealed to the Board of Commissioners. To do so, file an application with the Planning Department within five working days of the Planning Commission's decision.

The Hall County Board of Commissioners will hear appeals at a public hearing Thursday, July 13, 2023 at 6:00 p.m. at the Hall County Government Center, 2nd Floor Meeting Room, 2875 Browns Bridge Road, Gainesville, Georgia.

**The Planning Commission's recommendation will be forwarded to the Board of Commissioners for final action at a public hearing on Thursday, July 13, 2023. The Board will meet at 6:00 p.m. at the Hall County Government Center, 2nd Floor Meeting Room, 2875 Browns Bridge Road, Gainesville, Georgia.

Thank you,
Ana Dominguez
Planning Commission Clerk
Hall County Community Development and Infrastructure

HALL COUNTY
GEORGIA

POST OFFICE DRAWER 1435
GAINESVILLE, GA 30503

t: 770.531.6800 | f: 770.531.3945

DIRECTOR
Srikanth Yamala

PUBLIC WORKS AND
UTILITIES DIRECTOR
Bill Nash, P.E.

Hall County Government

COMMUNITY DEVELOPMENT AND INFRASTRUCTURE
PUBLIC WORKS AND UTILITIES

M E M O R A N D U M

To: Randi Doveton, Director of Planning and Development

From: Bill Nash, Director of Public Works and Utilities

Date: May 18, 2023

Subject: June 5, 2023 - Hall County Planning Commission Agenda

Please be advised that our office has reviewed the Hall County Planning Commission agenda for the June 5, 2023 meeting. Upon review, we provide the following comments.

NEW BUSINESS

1. **3621 Reece Circle** | appeal an administrative decision for a hardship manufactured home, as it relates to §17.350.110 on a 1.01± acre tract located on the south side of Reece Circle at its intersection with A L Mangum Road | Zoned R-II; Tax Parcel 15014 000056A | **Proposed use: hardship mobile home** | * Commission District 3 | **Henry Whitlow, applicant.**

   a. **Engineering:** No Comment
   b. **Traffic:** No Comment
   c. **Utilities:** No Comment

2. (A) **3263 Tanners Mill Road | Use Subject to County Commission Approval |** on a 37.28± acre tract located on the east side of Tanners Mill Road approximately 756 feet from its intersection with Weaver Road | Zoned AR-IV; Tax 15025 000002 **| Proposed use: agri-entertainment venue |** **Commission District 1 | **Paden M. Dunagan, applicant.**

   a. **Engineering:** The site may require a stormwater management report should the site plan indicate the proposed development meets stormwater thresholds for impervious surfaces and/or disturbed acreage Show stream buffer and impervious setback from wrested vegetation not center line of stream
   Show stream buffer and impervious setback from wrested vegetation not center line of stream
   Proposed development is within 200' of state waters and will require a L.D.P.
   b. **Traffic:** No Comment
   c. **Utilities:** No Comment

3. (A) **4375 Peckerwood Road | Rezone |** from Residential-I-Low Density (R-I-L) to Agricultural Residential-III (AR-III) on a 5.21± acre tract located on the east side of Peckerwood Road approximately 1,720 feet from its intersection with Gillsville Highway | Zoned R-I-L; Tax Parcel 15003 000136 **| Proposed use: permitted uses in AR-III |** **Commission District 3 **| Carlos & Tara Gregory, applicants.**

a. **Engineering:** The site may require a stormwater management report should the site plan indicate the proposed development meets stormwater thresholds for impervious surfaces and/or disturbed acreage
b. **Traffic:** No comment
c. **Utilities:** Check with environment health if separate septic system will be required for food service.

4. **4033 Hidden Hollow Drive | Rezone |** from Planned Residential Development (PRD) to Agricultural-Residential-III (AR-III) on a 4.36± acre tract located on the west side of Hidden Hollow Drive approximately 718 feet from its intersection with Hidden Hollow Terrace | Zoned PRD; Tax Parcel 10098 000125 **| Proposed use: permitted uses in AR-III |** ** Commission District 2 | **Bourdua REI, LLC/Brian Bourdua, applicant.**

   a. **Engineering:** This property may have multiple streams and springheads as depilated on "plat for E.R.E. INC." any development on this property must show all stream buffers and flood zones.
   The site may require a stormwater management report should the site plan indicate the proposed development meets stormwater thresholds for impervious surfaces and/or disturbed acreage
   FEMA and Hall County studied Flood plains present on site.
   Show stream buffer and impervious setback from wrested vegetation not center line of stream
   b. **Traffic:** No Comment
   c. **Utilities:** Gainesville sewer district

5. **5800 Lanier Islands Parkway | Rezone |** from Planned Commercial Development (PCD) Conditional to Planned Commercial Development (PCD) to amend existing conditions on a 3.57± acre tract located on the south side of Lanier Islands Parkway at its intersection with Beards Road | Zoned PCD; Tax Parcel 07329 004012 **| Proposed use: vehicle sales and construction equipment rental & sales |** ** Commission District 2 **| Vacutek, LLC, applicant.**

   a. **Engineering:** The site may require a stormwater management report should the site plan indicate the proposed development meets stormwater thresholds for impervious surfaces and/or disturbed acreage Show stream buffer and impervious setback from wrested vegetation not center line of stream
   b. **Traffic:** GDOT permit required for access to Lanier Islands parkway.
   c. **Utilities:** City of Buford sewer district.

6. **Deaton Creek Parkway | Change a Segment of a Road Name |** on the official Hall County road map from Deaton Creek Parkway to Deaton Way; being a ±0.096 mile section between Friendship Road and Thompsons Mill Road | ** Commission District 1 | **Hall County Public Works Staff, applicant.**

   a. **Engineering:** No Comment
   b. **Traffic:** No Comment
   c. **Utilities:** No Comment.

Anael Dominguez (CDI: Planning)

From: John Hornick (Fire Services)
Sent: Tuesday, May 16, 2023 1:18 PM
To: Randi Doveton (CDI: Planning)
Cc: Anael Dominguez (CDI: Planning); Michael Vieira (Fire Services)
Subject: Fire Comments

Monday, June 5, 2023 Hall County Planning Commission Meeting.

1. (A) **3263 Tanners Mill Road | Use Subject to County Commission Approval |** on a 37.28± acre tract located on the east side of Tanners Mill Road approximately 756 feet from its intersection with Weaver Road | Zoned AR-IV; Tax 15025 000002 **| Proposed use: agri-entertainment venue |** **Commission District 1 | **Paden M. Dunagan, applicant.**

2. (B) **3263 Tanners Mill Road | Variance |** to allow for outside amplification of voice, music and/or instruments except during a wedding ceremony on a 37.28± acre tract located on the east side of Tanners Mill Road approximately 756 feet from its intersection with Weaver Road | Zoned AR-IV; Tax 15025 000002 **| Proposed use: agri-entertainment venue |** **Commission District 1 | **Paden M. Dunagan, applicant.**

   Hall County Fire Marshal's Comments:
   1) Site visit on 5/6/23 by the Hall County Fire Marshal's Office found a large commercial barn under construction that does not meet fire code as an event venue.
   2) The conceptual site plan is hand drawn and not to scale, the Hall County Fire Marshal's Office cannot comment on site plan as proposed. Note: The site work and proposed commercial barn are near completion.
   3) The conceptual building plans show the occupancy classification as a Group S-1 Storage Occupancy with an occupant load of 8 the project data does not match the scope of work summary for a timber framed commercial barn for events, the Hall County Fire Marshal's Office cannot comment on the building plan as proposed. Note: The commercial barn is near completion and does not match the conceptual building plans.
   4) The conceptual site and building plans do not meet fire code as proposed.
   5) Site and building plans will be required.

Regards,

John Hornick, NPQ Fire Service Plans Examiner 1
Lieutenant, Hall County Fire Rescue
Hall County Government
Main: 770-531-6838 | Cell: 404-597-0083
Website: www.Hallcounty.org

Print

Planning Commission Comments - June 5, 2023 - Submission #77548

Date Submitted: 6/5/2023

Comments completed in the form below will be submitted into the record for the June 5, 2023 meeting of the Hall County Planning Commission.

First Name*

Michelle

Last Name*

Jackson-Thacher

Address1*

3252 Cooper Bridge Rd

Address2

City*

Gainesville

State*

GA

Zip*

30507

Zoning Item for Comment*

2B. 3263 Tanners Mill Road | Variance

Select from the list below which zoning item you would like to register a comment on. Items are listed in the order in which they appear on the agenda.

Your Comments*

Dear Hall County Planning Commission,
I wanted to register my comments on the variance proposal for outdoor amplification of music. I have tried to look at this issue from both sides of the fence, residents and even Mr. Dunagan's perspective. I've driven the area several times as it's in a reasonable proximity to my own.
This variance should be denied as it would create an environment not beneficial to the residents of Tanners Mill Road and surrounding residences to this venue. I personally feel the disruptive nature isn't appropriate for an area that is the majority residential. And this wouldn't create a positive relationship between the Dunagan Hill Venue and the residents who live in these areas. Agri-entertainment venues are allowed to open and run a business inside of residential neighborhoods. Please bear in mind the Dunagan Hill Venue is within a residential area and deny the variance for the outdoor amplification of any kind.
Thank you for your attention and consideration,
Michelle Jackson-Thacher

Please write your comments in the box above.

File Upload

Choose File No file chosen

If you have files, such as photos, videos or text documents to include with your comments, upload them in the box above.

Would you like follow-up communication?

Please leave an email address and/or phone number if you would like a Hall County staff member to follow-up with you.

ZONING NOTICE

AN APPLICATION HAS BEEN FILED WITH HALL COUNTY IN REGARD TO THE ZONING REGULATIONS AS THEY APPLY TO THIS PROPERTY

APPLICANT: PADEN M. DUNAGAN

REQUEST: USE SUBJECT TO COUNTY COMMISSION APPROVAL FOR AN AGRI-ENTERTAINMENT VENUE WITH A VARIANCE.

PUBLIC HEARINGS WILL BE HELD ON:

PLANNING COMMISSION
Date: JUNE 5, 2023
Time: 5:15 PM

&

COUNTY COMMISSION
Date: JULY 13, 2023
Time: 6:00 PM

HALL COUNTY GOVERNMENT CENTER, 2875 BROWNS BRIDGE ROAD, GAINESVILLE, GA

FOR MORE INFORMATION CALL: (770) 531-6809

ZONING NOTICE

ZONING NOTICE
AN APPLICATION HAS BEEN FILED WITH HALL COUNTY IN REGARD TO THE ZONING REGULATIONS AS THEY APPLY TO THIS PROPERTY
APPLICANT: PADEN M DUNAGAN
REQUEST: USE SUBJECT TO COUNTY
Commission Approval For an Adult Entertainment Venue
PUBLIC HEARINGS WILL BE HELD ON WITH A VARIANCE
PLANNING COMMISSION
Date: JUNE 6, 2023
Time: 5:15 pm
&
BOARD OF COMMISSIONERS
Date: JULY 13 2023
Time: 6:00 pm
HALL COUNTY GOVERNMENT CENTER 2875 BROWN BRIDGE ROAD GAINESVILLE GA
FOR MORE INFORMATION CALL: (770) 531-6809

AGENDA ITEM

Public Hearing to amend Hall County's Zoning Map as follows:

REPORT TO: **Work Session (07/10/23)**

REPORT TO: **Voting Meeting (07/13/23)**

ITEM NO: 357/2023

SUBJECT: **3263 Tanners Mill Road | Variance |** to allow for outside amplification of voice, music and/or instruments except during a wedding ceremony on a 37.28± acre tract located on the east side of Tanners Mill Road approximately 756 feet from its intersection with Weaver Road | Zoned AR-IV; Tax 15025 000002 **| Proposed use: agri-entertainment venue |** Commission District 1 **| Paden M. Dunagan, applicant.**

Meetings:

Work Session Date: 07/10/23 **Voting Meeting Date:** 07/13/23

Executive Summary:

Presenter: RD

Recommendation:
Denial.

Purpose of Request:
3263 Tanners Mill Road | Variance | to allow for outside amplification of voice, music and/or instruments except during a wedding ceremony on a 37.28± acre tract located on the east side of Tanners Mill Road approximately 756 feet from its intersection with Weaver Road | Zoned AR-IV; Tax 15025 000002 | **Proposed use: agri-entertainment venue** | Commission District 1 | **Paden M. Dunagan, applicant.**

History:

Facts and Issues:

Options:

Funding Requested	$ 0.00
Are funds within current budget?	No
Source of Funds	
Does the action involve a Resolution, Ordinance, Contract, Agreement, etc.?	No
Has it been reviewed by the County Attorney?	Yes
Is there a deadline for this item?	

Approvals:

Submit	Approve	Attorney	Administration
AD	RD	WLI	CR
Clerk			
JR			

Attachments:

Board Memo
Recommendation Report
Application
Narrative
Site Plan
Maps
Renderings
Environmental Health Comments
GDOT Comments
Public Works Comments
Fire Comments
Public Comment
Notice Sign Photos

HALL COUNTY
GEORGIA

POST OFFICE DRAWER 1435
GAINESVILLE, GA 30503

t: 770.531.6809 | f: 770.531.3902

DIRECTOR
Srikanth Yamala

PLANNING AND DEVELOPMENT
DIRECTOR
Randi Doveton

Hall County Government

COMMUNITY DEVELOPMENT AND INFRASTRUCTURE
PLANNING AND DEVELOPMENT

To: Richard Higgins, Chairman
Kathy Cooper, District 1 Commissioner
Billy Powell, District 2 Commissioner
Gregg Poole, District 3 Commissioner
Jeff Stowe, District 4 Commissioner

From: Randi Doveton, Director of Planning & Development

Date: June 19, 2023

Subject: **3263 Tanners Mill Road | Use Subject to County Commission Approval |** on a 37.28± acre tract **| Proposed use: agri-entertainment venue | Paden M. Dunagan, applicant.**

The request before you is the request of Paden M. Dunagan for a Use Subject to County Commission approval to allow an agri-entertainment venue with a variance to allow outside amplification. This item is located within Commission District 1.

At their June 5, 2023 meeting, the Hall County Planning Commission voted to recommend approval of the use but to deny the variance request. The use was approved with five (5) conditions **(3-0, Sosebee & Varner absent)**.

There was **one (1) comment in opposition submitted** in advance of the Planning Commission meeting and **one (1) person spoke in opposition during the public hearing.**

There have been no changes to the request since the Planning Commission took action.

Planning Commission Approval Conditions:

1. The agri-entertainment business shall operate as described in the narrative and depicted on the site plan.
2. The agri-entertainment business shall satisfy all comments from the Environmental Health Department, Fire Marshal, Public Works and Utilities, and Georgia Department of Transportation prior to obtaining an agri-entertainment business license. Plans addressing comments, or for any further improvements, or development, of the property shall be submitted for review and appropriate permits obtained.
3. No variances are granted as part of this request.
4. Any expansion to the existing agri-entertainment business shall require additional approval from the County Commission.

5. Per, §2.60.060. – effective period of approved applications, all applications approved by the board, whether a request for variance from the terms of Title 17, a request for conditional use, a request for the enlargement, change or continuance of a nonconforming use or a request to appeal a decision by an administrative official in the enforcement of Title 17, shall be effective for a period of six months. If no action is taken by the applicant to implement the purpose of the application by obtaining the proper permit and/or license and proceeding with the building, occupancy or establishment of business within six months from the date of approval by the board, said approval shall become null and void.

HALL COUNTY PLANNING COMMISSION
RECOMMENDATION REPORT

Applicant.....Paden M. Dunagan

Request.....(A) Use Subject to County Commission Approval for an agri-entertainment venue.
(B) Variance from the standards of 17.215 to permit outside amplification of voice, music, and/or instruments.

Proposed Use.....agri-entertainment venue

Size.....37.28± acres

Zoning.....Agricultural Residential IV (AR-IV, 17.120)

Location.....**3263 Tanners Miller Road** | Tax Parcel 15025 000002

Commission District.....One

Planning Commission Date.....June 5, 2023

Staff Recommendation..... **(A) Approval with conditions as the proposed request is consistent with the intent and standards of the agri-entertainment district (17.215) and**
(B) Denial for a variance from the standards of 17.215 to permit outside amplification of voice, music, and/or instruments as the request does not meet the hardship criteria established in 2.60.030.J.

Planning Commission Recommendation.....(A) Approval, with conditions.
Vote: 3-0 (Sosebee & Varner absent)
(B) Denial.
Vote: 3-0 (Sosebee & Varner absent)

Planning Commission Conditions:

1. The agri-entertainment business shall operate as described in the narrative and depicted on the site plan.
2. The agri-entertainment business shall satisfy all comments from the Environmental Health Department, Fire Marshal, Public Works and Utilities, and Georgia Department of Transportation prior to obtaining an agri-entertainment business license. Plans addressing comments, or for any

further improvements or development of the property shall be submitted for review and appropriate permits obtained.
3. No variances are granted as part of this request.
4. Any expansion to the existing agri-entertainment business shall require additional approval from the County Commission.
5. Per, §2.60.060. – effective period of approved applications, all applications approved by the board, whether a request for variance from the terms of Title 17, a request for conditional use, a request for the enlargement, change or continuance of a nonconforming use or a request to appeal a decision by an administrative official in the enforcement of Title 17, shall be effective for a period of six months. If no action is taken by the applicant to implement the purpose of the application by obtaining the proper permit and/or license and proceeding with the building, occupancy or establishment of business within six months from the date of approval by the board, said approval shall become null and void.

Public Forum:

David Jones, 5110 Weaver Road, Gainesville, spoke in opposition. Concerns were noise and times of operation.

Summary Analysis

The applicant is requesting (A) conditional use approval from the County Commission to bring an existing agri-entertainment venue into compliance with the agri-entertainment business standards (17.215) located on the 37.28± acre parcel. Within the Agricultural Residential IV (AR-IV, 17.120), agri-entertainment businesses are a use subject to the approval of the County Commission, resulting in the current application. Additionally, the application is requesting (B) a variance from the standards of the agri-entertainment district (17.215.040) which states that "outdoor activities within the agri-entertainment event barn or primary event structure shall not involve the outside amplification of voice, music and/or instruments except during a wedding ceremony."

In the submitted application materials, the narrative describes the agri-entertainment business as being a venue for weddings and events that are ceremony-type gatherings. The events will take place in an existing barn (80' x 96'), which is located 350 feet from the eastern boundary of the property and 510 feet from the southern boundary. The barn is timber-framed with a metal standing seam roof and is 7,840 square feet in area. The total occupancy of the barn will be set by Hall County Fire Marshals and determined at a future date. The proposed hours of operation meet the criteria established by the agri-entertainment district (17.215). Specifically, events would begin no earlier than 9:00 a.m. and would end no later than 10:00 p.m. on Sunday through Thursday and no later than 12:00 a.m. on Friday and Saturday.

An existing gravel parking lot is located to the west of the barn, partially under a power line easement. The applicant has provided documentation from Georgia Power that the gravel parking lot beneath the transmission lines is approved but additional documentation is needed to verify the proposed parking lot use.

The applicant's narrative states that there are two (2) types of activities that will occur outside of the barn: an outdoor wedding ceremony and a fire pit. In either instance, there would be no permanent outdoor audio for

the grounds surrounding the barn. Instead, an audio system would be used temporarily if it was warranted by the event.

The applicant is requesting one (1) variance from the conditions of an agri-entertainment business, (17.215.040). Specifically, the applicant has requested relief from the following condition:

- Outdoor activities within the agri-entertainment event barn or primary event structure shall not involve the outside amplification of voice, music and/or instruments except during a wedding ceremony.
    - *The applicant's narrative states that there would be two instances where gatherings may occur outside of the event barn. The first being outdoor ceremonies, which would permit the temporary use of outdoor amplification under the standards of (17.215.040). The second scenario would be an outdoor fire pit, which would be an outdoor gathering area used during events. In both scenarios, the applicant's narrative states that there would be no permanent outdoor audio equipment, instead it would be temporary and mobile, set up only if outdoor activities were planned. The proposal* ***does not meet*** *this condition.*

Based on the future land-use plan, staff finds the requested conditional use *consistent* with the intent of the agri-entertainment use and the future land use classification of Rural Residential character area in the Comprehensive Plan.

Zoning Analysis

(A) Use Subject to County Commission Approval | Agri-entertainment venue

Per §17.215.040, conditions and regulations for agri-entertainment:

1. A Hall County Business License shall be required if the zoning request is approved for the agri-entertainment events.
    - *The applicant will be required to obtain a Hall County Business License, subject to the below conditions and any additional conditions added, prior to beginning operation.*
2. The property shall be used for the purpose of providing an agri-entertainment venue, as provided for in section 17.215.030(A).
    - *The proposed uses are consistent with those described in section 17.215.030(A).*
3. The structure that will house the agri-entertainment event shall be located a minimum of 300 feet from any property lines of a different owner.
    - *The event barn meets this requirement. The barn is located 350 feet from the eastern property line and 510 feet from the southern property line*.
4. All parking for an agri-entertainment event shall be located a minimum of 200 feet from any property lines of a different owner.
    - *The existing parking lot appears to meets this requirement, although there are no dimensions indicated on the site plan.*
5. Parking shall be permitted on grass or gravel.
    - *The applicant's narrative states that the parking area is gravel.*
6. The agri-entertainment event barn or primary event structure shall be permitted to be constructed only on the property described.

- *The existing 80 foot by 96 foot timber-framed barn, which would be utilized as the agri-entertainment venue, was permitted through Hall County Building Inspections in August of 2022 on the subject property.*

7. The maximum number of attendees to occupy any agri-entertainment event barn or structure on the premises shall be regulated by the Hall County Fire Marshal.
    - *The applicant has not included any information regarding capacity for the proposed activities; however, the occupancy will be determined by the county Fire Marshal prior to the issuance of any license.*
8. The occupancy of the agri-entertainment event barn or primary event structure shall not exceed the occupancy load provisions of the Uniform Building Code and those occupancy load limits shall be posted on the premises by the Hall County Building Inspection Department.
    - *If approved, the occupancy will be determined by Hall County Building Inspections, based on the above criteria.*
9. The use of the premises for an agri-entertainment venue shall be permitted only after the issuance of a certificate of occupancy by the Hall County Building Inspection Department.
    - *If approved, the applicant shall be required to obtain a certificate of occupancy prior to commencing operations.*
10. Any improvements required to support the property as an agri-entertainment venue shall be made only after the issuance of a building permit by the Hall County Building Inspection Department.
    - *The existing barn, which is proposed to be utilized as the agri-entertainment venue, was permitted by Hall County Building Inspections in August of 2022. Additional inspections will be required for the commercial use of the structure.*
11. Outdoor activities within the agri-entertainment event barn or primary event structure shall not involve the outside amplification of voice, music and/or instruments except during a wedding ceremony.
    - *The applicant has requested a variance to permit the outdoor amplification of voice, music, and/or instruments in certain situations.*
12. Agri-entertainment events shall commence no earlier than 9:00 a.m. and shall terminate no later than 10:00 p.m. on Sunday through Thursday and no later than 12:00 a.m. on Friday and Saturday.
    - For [the] purpose of this section, *termination* shall mean the termination of food, drinks, service and entertainment with the understanding that attendees will need a reasonable amount of time after termination to exit the premises.
    - *The proposed agri-entertainment business meets this condition.*
13. All agri-entertainment events shall be provided with adequate potable water and sanitary waste disposal systems as approved by the Hall County Environmental Health Department.
    - *The applicant has not indicated how potable water and sanitary waste will be handled for the event venue.*
14. All agri-entertainment events shall provide for adequate access and egress for emergency vehicles as determined through the development review process.
    - *The applicant will be required to receive approval from Hall County Engineering and Fire Services regarding access to the property.*
15. All agri-entertainment events shall be provided with adequate personnel to assist with parking, emergency and other potential impacts of each event.
    - *The applicant has not addressed this in the application, but it will be required if the request is approved.*
16. If the property being considered for agri-entertainment use is "bona-fide conservation use property" as defined under O.C.G.A. §§ 48-5-7.1 through 48-5-7.4, caution should be used to insure that the proposed agri-entertainment use of the property does not constitute a breach of the conservation covenants applicable to the property.

- *The property is not under a conservation use covenant and as such this regulation is not applicable.*

Per Planning Commission and Hall County Commission consideration and decision (17.380.060), the planning commission shall study the need and justification for the change based on a determination of the facts applicable to the particular case, and the following general lines of inquiry shall be considered, to wit:

1. Whether the zoning proposal will permit a use that is suitable in view of the use, development and zoning of adjacent and nearby property; **The proposed use of the property as an event venue in the Agricultural-Residential-IV (AR-IV, 17.120) district is consistent with the standards for agri-entertainment uses (17.215). The surrounding properties are also zoned AR-IV, 17.120.**

2. Whether the zoning proposal will adversely affect the existing use or usability of adjacent or nearby property; **The request is for conditional use approval for an agri-entertainment business in the Agricultural-Residential-IV (AR-IV, 17.120) district. The proposed use may be more intense than that of the adjacent or nearby parcels, but the usability should not be impacted. If approved, the site will be developed in accordance with applicable development regulations.**

3. Whether the property to be affected by the zoning proposal has a reasonable economic use as currently zoned; **Yes, the property has reasonable economic use as currently zoned, Agricultural-Residential-IV (AR-IV, 17.120) but the proposed business cannot occur as described without approval of the conditional use request.**

4. Whether the zoning proposal will result in a use which will or could cause an excessive or burdensome use of existing streets, transportation facilities, utilities, schools, police protection, fire protection, public health facilities or emergency medical service; **The proposed use may cause an excessive or burdensome use of existing streets and transportation facilities, depending on the number of guests the business can accommodate.**

5. Whether the zoning proposal is in conformity with the policy and intent of the future land use plan for the physical development of the area; **The current application is for a conditional use request for agri-entertainment business within the Agricultural-Residential-IV (AR-IV, 17.120) district. The parcels fall within the Rural Residential character area of the Comprehensive Plan. The intent of this character area is to preserve the established residential/rural character and create a transition between the Rural character area and development in Residential areas. The proposed use is consistent with the Comprehensive Plan and the standards for agri-entertainment businesses.**

6. The extent to which property values are diminished by the existing zoning restrictions; **Staff is unable to determine the extent to which property values are diminished by the existing zoning restrictions.**

7. The extent to which the destruction of the subject property's value under the existing zoning promotes the health, safety, morals or general welfare of the public; **Staff is unable to comment on the impact of property values without a full market analysis. Multiple factors impact property value including construction types, proposed uses, and maintenance. Often it is difficult to determine the effect of a development on adjacent properties until the development is completed.**

8. The relative gain to the public as compared to the hardship imposed upon the individual property owner; **Staff has not identified a hardship imposed on the property owner as the property is currently zoned.**

9. The length of time the property has been vacant as zoned considered in the context of land development in the area in the vicinity of the property; **Aerial imagery shows the property as undeveloped until 2020, when the applicant constructed a single-family residence on the property. In 2022 the applicant obtained a building permit for an 80' by 96' farm use barn which is intended to be utilized as the event venue.**

10. Whether there are other existing or changing conditions affecting the use or development of the property which give supporting grounds for either approval or disapproval of the zoning proposal; **There are no known changing conditions affecting the use or development of the property.**

11. Whether the change would create an isolated district unrelated to the surrounding districts; **There is no proposed change to the underlying zoning, as such, this criteria is not applicable.**

12. Whether the present zoning district boundaries are illogically drawn in relation to existing conditions in the area; **There is no evidence that the present zoning district boundaries are illogically drawn.**

13. Whether the change requested is out of scale with the needs of the county as a whole or the immediate neighborhood; **No, the request is not out of scale with the needs of the county as a whole, the proposed use could compliment the residential growth occurring in the south Hall area.**

14. Whether it is impossible to find adequate sites for the proposed use in districts permitting such use and already appropriately zoned; **The proposed uses require Board of Commissioner approval for a conditional use permit. As such, there are no adequate sites already zoned for an agri-entertainment business.**

15. Whether the need for rezoning could be handled instead by a variance request to the [planning commission]; **No, the request could not be handled instead by a variance.**

16. Whether there would be an ecological or pollution impact resulting from major modifications to the land if the request is granted; **Any land disturbance activities on the property shall be required to go through the land development permitting process, and as a result are subject to local, state, and federal regulations. As a result, there should not be an ecological or pollution impact resulting from any modification to the land if the request is granted.**

17. Whether there is reasonable evidence based upon existing and anticipated land use that would indicate a mistake was made in the original zoning of the property; **There is no indication that a mistake was made in the original zoning.**

(B) Variance | to allow for outside amplification of voice, music and/or instruments except during a wedding ceremony

The Planning Commission is hereby authorized to grant variances from the strict application of this Resolution upon proof by a preponderance of the evidence that 2.60.030.J provided the request meets the criteria set forth in 2.60.030.K.

1. There are extraordinary and exceptional conditions pertaining to the particular lot in question because of its size, shape or topography (the hardship must relate to the physical character of the lot and not to a personal or economic hardship); **There do not appear to be extraordinary or exceptional conditions pertaining to the subject property, instead the need for a variance has been created by the applicant's proposed use of outdoor amplification during events as opposed to the site conditions.**

2. The application of the requirements of this Title 17 to this particular piece of property would create an unusual hardship; **No unusual hardship would be created through the application of the requirements Title 17. The applicant would not be able to have outdoor amplification other than during times permitted by the agri-entertainment regulations (17.215).**

3. Such conditions are peculiar to the particular piece of property involved and are not common to other properties in the neighborhood; **No, the conditions are not peculiar to the subject parcel but the result of the proposed use of the property.**

4. Such conditions are not the result of any actions of the property owner; **The site development has been proposed by the applicant.**

5. Relief, if granted, would not cause substantial detriment to the public good or impair the purposes and intent of Title 17; provided, however, that no variance may be granted for a use of land or building or structure that is prohibited by Title 17 or for a conditional use which has been denied by the county planning commission. **Relief, if granted, would not cause substantial detriment to the public good or impair the purposes and intent of Title 17.**

17.380.050. - Submission requirements

A. Any person or persons requesting a change in the official zoning map or use subject to approval of the county commission shall file an application with a plat or map of the property attached thereto, together with payment of such fees set forth in chapter 17.30 to cover administrative and advertising costs, in the planning department office. Such person or persons or their authorized agent shall appear in person at the public hearing held to consider the district change. **Proposal meets the requirement. Applicant has paid the appropriate fees and understands that someone must be present at the Hall County Planning Commission.**

B. All applications for a change of zoning classification or use subject to approval of the county commission shall include:

   1. A narrative statement identifying the existing and proposed use of the property and addressing each of the criteria set forth in section 17.380.060.C of this section [chapter]. **The applicant has submitted a narrative and site plan but has not explicitly addressed the criteria listed in 17.350.120.**

2. A site plan drawn to scale designating the area covered by the application and identifying existing and proposed buildings and uses, adjacent existing land uses, zoning on contiguous parcels, including those across an abutting public right-of-way, and any other significant site improvements proposed to accommodate the proposed use or buffer adjacent uses, etc., or a plat of the subject property where no specific land use is proposed. In cases where only a plat or map is provided and no land use is proposed, the planning commission and county commission shall evaluate the application based on the most intense possible land use permitted in the proposed district**. The applicant submitted a site plan drawn to scale.**

C. For any application for a slow rate land treatment system (see chapter 17.20), the following additional requirements apply. **This standard is not applicable as the site will be served by an onsite septic system.**

D. For any application proposing the development of 100 or more residential dwelling units, a traffic impact study shall be submitted prior to consideration of the application by the planning commission. At the applicant's expense, the traffic impact study shall be prepared by a professional engineer in accordance with requirements established by the Hall County Engineering Department. The engineering department shall review the traffic impact study and forward any comments to the Hall County Planning Commission. **As there are not 100 or more residential dwelling units proposed, this criteria is not applicable.**

Development Support and Constraints – Departmental / Agency Comments

Hall County Environmental Health

An email dated May 17, 2023, from Emily McGahee, Environmental Health, stated "A detailed business plan must be submitted to Hall County Environmental Health for review. Additional items septic system modification/expansion may be required after review of business plan. Tourist Accommodation permit/plan review and/or Food Service permit/plan review may be required after review of business plan."

Hall County Fire Marshal

An email dated May 16, 2023, from John Hornick, NPQ Fire Inspector 1, Plans Review Lieutenant stated "Hall County Fire Marshal's Comments:

1) Site visit on 5/6/23 by the Hall County Fire Marshal's Office found a large commercial barn under construction that does not meet fire code as an event venue.
2) The conceptual site plan is hand drawn and not to scale, the Hall County Fire Marshal's Office cannot comment on site plan as proposed. Note: The site work and proposed commercial barn are near completion.
3) The conceptual building plans show the occupancy classification as a Group S-1 Storage Occupancy with an occupant load of 8. As the project data does not match the scope of work summary for a timber framed commercial barn for events, the Hall County Fire Marshal's Office cannot comment on the building plan as proposed. Note: The commercial barn is near completion and does not match the conceptual building plans.
4) The conceptual site and building plans do not meet fire code as proposed.
5) Site and building plans will be required.

Hall County Public Works and Utilities

In a memo dated May 18, 2023, Bill Nash, Director of Public Works and Utilities, provided the following comments:

Engineering:
The site may require a stormwater management report should the site plan indicate the proposed development meets stormwater thresholds for impervious surfaces and/or disturbed acreage Show stream buffer and impervious setback from wrested vegetation not center line of stream
Show stream buffer and impervious setback from wrested vegetation not center line of stream
Proposed development is within 200' of state waters and will require a L.D.P.

Traffic:
No comment.

Utilities
No comment.

Georgia Department of Transportation
In an email dated May 11, 2023, Jonathan Peevy, Assistant District Traffic Engineer, confirmed this project will require GDOT coordination.

- **Excerpts from the minutes of the June 5, 2023 meeting**

Applicant's Presentation:

Randi Doveton, Planning Director, presented a summary of the request.

Paden Dunagan, 3263 Tanners Mill Road, Gainesville, presented the request. The applicant stated that they are in the middle of 40-acres and would like to be able to amplify music.

Public Forum:

David Jones, 5110 Weaver Road, Gainesville, spoke in opposition. Concerns were noise and times of operation.

Planning Commission Comments:

Mr. Braswell clarified that the applicant is requesting to allow the amplification of music after a wedding ceremony. Ms. Pilcher read the recommended conditions to make sure the applicant agreed to them.

Motion: A motion to approve, with conditions was made by Ms. Pilcher and seconded by Mr. Hunt. Vote: 3-0 (Sosebee & Varner absent)

Conditions:

1. The agri-entertainment business shall operate as described in the narrative and depicted on the site plan.

2. The agri-entertainment business shall satisfy all comments from the Environmental Health Department, Fire Marshal, Public Works and Utilities, and Georgia Department of Transportation prior to obtaining an agri-entertainment business license. Plans addressing comments, or for any further improvements or development of the property shall be submitted for review and appropriate permits obtained.
3. No variances are granted as part of this request.
4. Any expansion to the existing agri-entertainment business shall require additional approval from the County Commission.
5. Per, §2.60.060. – effective period of approved applications, all applications approved by the board, whether a request for variance from the terms of Title 17, a request for conditional use, a request for the enlargement, change or continuance of a nonconforming use or a request to appeal a decision by an administrative official in the enforcement of Title 17, shall be effective for a period of six months. If no action is taken by the applicant to implement the purpose of the application by obtaining the proper permit and/or license and proceeding with the building, occupancy or establishment of business within six months from the date of approval by the board, said approval shall become null and void.

PLANNING AND DEVELOPMENT DEPARTMENT
2875 BROWNS BRIDGE ROAD GAINESVILLE GA 30504
MAILING ADDRESS PO BOX 1435 GAINESVILLE GA 30503
t 770-531-6809 | f 770-531-3902

HALL COUNTY
We have it all in Hall

CONDITIONAL USE APPLICATION

Applicant (Name & Mailing Address)

Paden M. Dunagan
3263 Tanners Mill Road
Gainesville, GA 30507
Phone 678-936-9371
Email Address paden@LDweldingservice.com
Proposed Use Venue agri-entertainment

Property Owner (Name & Mailing Address)

Same
Phone
Email Address

Contact Person (Name & Mailing Address)

Same
Phone
Email Address

Status of Applicant

- ✓ Owner
- ☐ Option to Purchase
- ☐ Area Resident
- ☐ Other

Requested Action

Permissive Use:
☐ HCPC ☑ HCC
Fee:$ 1,000.00
Receipt #:
Check #:

Zoning: Ag AR-IV
Acreage 37 acres
Tax Parcel Number 15025 000002
Location Address 3263 Tanners Mill Road Gainesville, GA 30507

I hereby certify that the above information and all attached information are true and correct.

Sign [signature] Date: 3-21-2023

Applicant must complete all information above. Failure to complete this section will result in the refusal of the application. The Planning Department has 15 days to review all applications and will set the dates for each application. If the application is found insufficient, an agenda date will not be set until the required information is submitted. Please note that the Planning Commission and County Commission dates are tentative.

Application Withdrawal: I hereby **withdraw** the application.

Sign _____ Date: _____

Staff Use Only

Application Date: 3/30/2023
Taken by: B. Garmon
Tentative Planning Commission Date: 6/5/2023
Tentative County Commission Date: 7/13/2023
County Commission District: 1

PLANNING AND DEVELOPMENT DEPARTMENT
2875 BROWNS BRIDGE ROAD, GAINESVILLE, GA 30504
MAILING ADDRESS: PO BOX 1435, GAINESVILLE, GA 30503
t: 770-531-6809 | f: 770-531-3902

HALL COUNTY
We have it all in Hall

AUTHORIZATION OF PROPERTY OWNERS

Note: If the applicant is the property owner, please disregard this form.

Name of owner(s) Paden M. Dunagan

Address 3263 Tanners Mill Road
Gainesville, GA 30507

Phone Number 678-936-9371

Name of applicant(s) _____

Address Same

Phone Number _____

I swear that I am the owner of the property which is the subject matter of the attached applications as shown in the records of Hall County, Georgia.

I authorize the person named above to act as applicant in the pursuit of a rezoning, permissive use, or variance of this property.

Signature of Owner(s) Paden M. Dunagan

Personally appeared before me
PADEN M. DUNAGAN

who swears that the information contained in this authorization is true and correct to the best of his/her knowledge and belief.

Notary Public _____ Date _____

PLANNING AND DEVELOPMENT DEPARTMENT
2875 BROWNS BRIDGE ROAD GAINESVILLE GA 30504
MAILING ADDRESS PO BOX 1435 GAINESVILLE GA 30503
t 770-531-6809 | f 770-531-3902

HALL COUNTY
We have it all in Hall

CAMPAIGN CONTRIBUTIONS DISCLOSURE FORM

This form must be completed by the applicant and property owner, or person representing the property owner, for all zoning actions.

OCGA § 36-67A-3[C] Disclosure of campaign contributions:

(b) When any applicant for zoning action has made, within two years immediately preceding the filing of the applicant's application for the zoning action, campaign contributions aggregating $250.00 or more to a local government official who will consider the application, it shall be the duty of the applicant to file a disclosure report with the governing authority of the respective local government showing:

(3) The name and official position of the local government official to whom the campaign contribution was made; and

(4) The dollar amount and description of each campaign contribution made by the applicant to the local government official during the two years immediately preceding the filing of the application for the rezoning action and the date of each such contribution.

(b) The disclosures required by subsection (a) of this Code section shall be filed within ten days after the application for the zoning action is first filed. (Code 1981, Section OCGA § 36-67A-3[C], enacted by GA L. 1986, page 1269, Section 1, GA L. 1991, page 1365, Section 1).

I hereby certify that I have read the above and that:

I have**____ I have not ✓

within the two years immediately preceding this date, made any contribution(s) aggregating $250.00 or more to any local government official involved in the review or consideration of this application.

**If you have made such contributions, you must provide the data required below within ten (10) days of filing this application.

Name of Official(s): _____ Office: _____

Dollar Amount: _____ Date of Contribution: _____

Applicant's/Owner's Signature: _____ **Date:** 3-28-2023

Applicant's/Owner's Name (Printed): PAOEN M. DUNKERN

March 29th, 2023

DUNAGAN HILLS VENUE

Conditional Use Narrative

The purpose of Dunagan Hills Venue is to provide a general use venue for agri-entertainment that can be used for weddings and other types of ceremonies. These public gatherings will be limited to receptions and meetings that pertain to an agri-entertainment setting.

- The proposed use and type of business is strictly for weddings and events the are ceremony type gatherings. We are zoned AR-IV and have 37.65 acres, which puts all persons and structures far away from neighboring properties. We have the utmost interest in keeping the peace in the area and by doing so we will operate within the ordinance hours stated in the conditions and regulations for agri-entertainment.
- The structure and parking is centrally located in order to keep as much of a buffer as possible between surrounding properties. We will have ample parking on gravel close to the venue building. The drive entering and exiting the property will be graveled and asphalt to keep noise and dust to a minimum. We have also received approval from Georgia Power to park under the right of way of the powerline. See Attached
- Once we have completed the Condition Use Application, we will apply for a Hall County Business License in order to stay in accordance with all regulations. This will be done once the Certificate of Occupancy is provided by the Hall County Building Department upon the final inspection.
- I have met with the Hall County Fire Marshall and the maximum number of attendees of TBD has been set by there regulations in order to keep a safe environment in the place of an emergency or fire.
- There would be 2 types of gatherings outside the event structure. One would be an outdoor firepit for the comfort of guests. The other would be in the case of an outdoor wedding ceremony at the request of the bride. We will not have permanent outdoor audio for this type of event, it would only be a mobile temporary setup for the specific application.

BOUNDARY INFORMATION AS SHOWN ON PLAT BOOK 43, PAGE 264

SHEET NUMBER

SHEET TITLE

PROJECT NAME

PROPOSED HOUSE LOCATION FOR PADEN DUNAGAN
3263 TANNERS MILL ROAD
TAX PARCEL 15025 000002
CANDLER-GMD 1385
HALL COUNTY, GEORGIA

PROFESSIONAL SEAL

GEORGIA
REGISTERED
No. 2244
GEORGE SURVEYOR
GIVAN A. KYTLE

DRAWING ISSUE / REVISION

DATE	INITIALS/DESCRIPTION
9/22/2020	AS-BUILT LOCATION SKETCH

KYTLE ENGINEERING
& LAND SURVEYING
5367 HIGHWAY 52 - P.O. BOX 402
GILLSVILLE, GEORGIA 30543
PHONE: (404) 317-1544

IPF = IRON PIN FOUND
IPS = " " SET

MAG.

IPS
S71-48E
202.3
IPF
S73-19E
226.8
℄ BRANCH @ FENCE CORNER
WILLIAMS
S73-55E 827.3'
FENCE CORNER
IPS @ 6" HICKORY
S77-42E
104.0
S68-52E 719.52
IPF
MATHIS
S30-30E
306.6
POINT IN ℄ ROAD

S.R. # 211
N12-35E
626.6
GEORGIA POWER
℄ BRANCH
S21-01W
701.0
LOT # 4
ELIZABETH BRASELTON, EST.
IPS
N0-33W
117.1
10.02 ACRES
TRACT-1-
N0-36W
180.4
N6-10W
165.4
N0-17E
146.6
SMITH-DEAL
(NOW OR FORMERLY)
N2-15E
79.5
N16-21E
181.3
Fence Cor. & IPS
S46-30W (TIE) 293.2'
℄ ROAD
S.R. # 211
338.5'
S2-01E
IPS @ 10" POPLAR
S3-26W
142.1
N66-45W
46.0
℄ ROAD
15'
RIGHT OF WAY
N33-31W
111.7
S19-35W
109.7
S48-09W
56.6
N69-43W
66.4
N 83-03W 1052.75

27.63 ACRES
TRACT -2-

1287.22
S15-22W
N15-22E

30.65 ACRES
TRACT-3-

IPS @ 8" HICKORY
N 81-25W 1312.1

S1-50E
892.5'
℄ ROAD (COOPER BRIDGE RD.)
GA. KRAFT
ROCK & IPF

TRANSMISSION LINES

CAGLE

H. F. FARLEY, JR. ★ WM. H. COLLINS
REGISTERED
No. 1301 No. 1435
Expires 12-31-70
LAND SURVEYORS
GEORGIA

68.30 ACRES ... TOTAL

FARLEY-COLLINS ASSOC. P. O. BOX 731 532-1001 1201 THOMPSON BRIDGE ROAD GAINESVILLE, GA.	SCALE: 1" = 200 DATE: MAY 5, 1970	PROPERTY OF AMOS H. NICHOLS CANDLER (GM 1389) DISTRICT HALL COUNTY, GA.

HOWARD SUTTON CO., N. Y. C. 93161

264

Recorded May 26, 1970

H. Grady Watson - Clerk

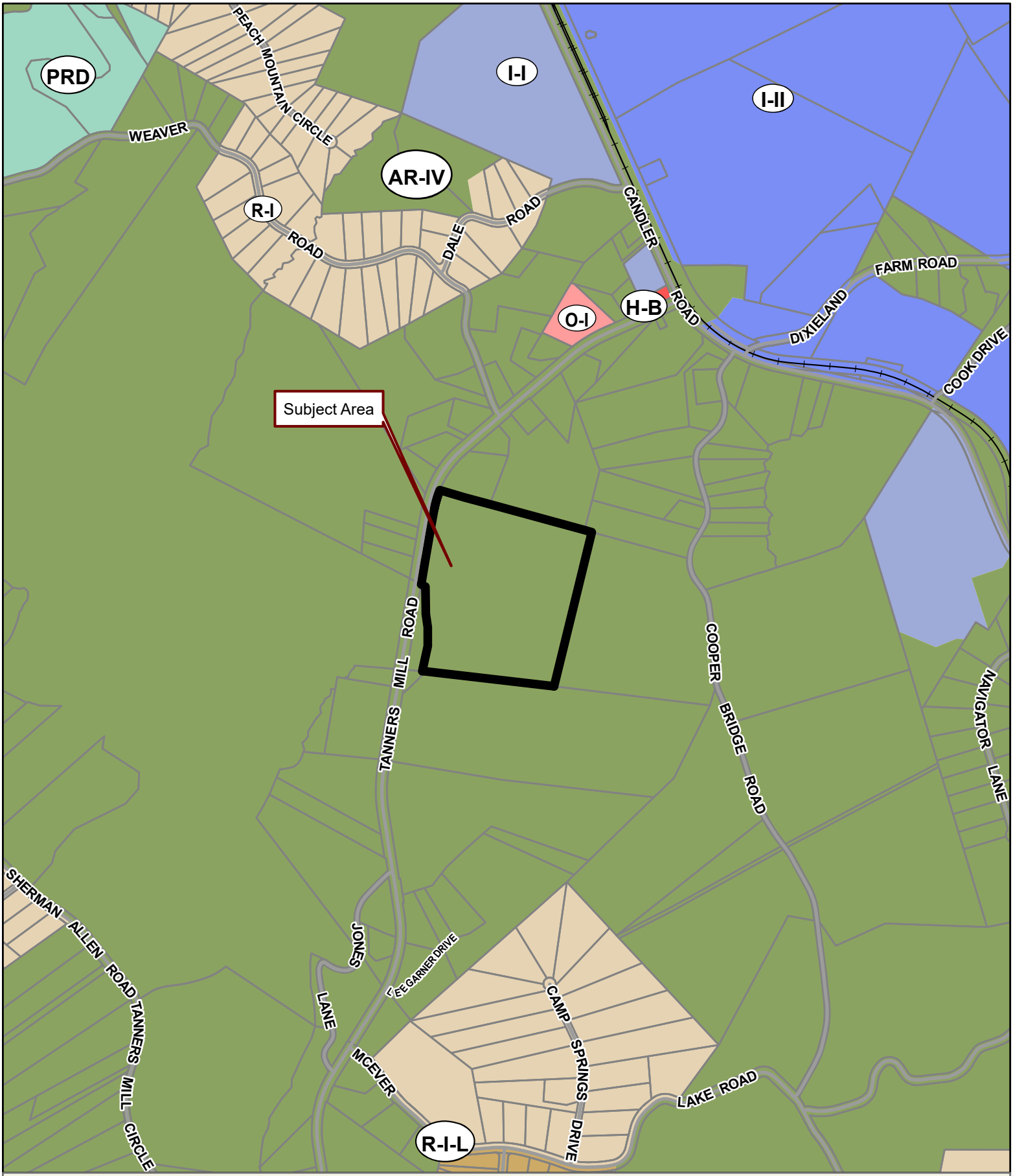

Applicant: PADEN M. DUNAGAN
Tax Parcel #: 15025 000002
Location: 3263 TANNERS MILL ROAD, GAINESVILLE, GA 30507
Commission District 1 **PC Mtg. Date:** 06/05/2023

0 300 600 1,200
Feet

Zoning Boundary
City Limits
Subject Area
Structure

N

Applicant: PADEN M. DUNAGAN
Tax Parcel #: 15025 000002
Location: 3263 TANNERS MILL ROAD, GAINESVILLE, GA 30507
Commission District 1 **PC Mtg. Date:** 06/05/2023

0 100 200 400
Feet

Zoning Boundary
City Limits
Subject Area
Structure

N

Applicant: PADEN M. DUNAGAN
Tax Parcel #: 15025 000002
Location: 3263 TANNERS MILL ROAD, GAINESVILLE, GA 30507
Commission District 1 **PC Mtg. Date:** 06/05/2023

0 100 200 400
Feet

Zoning Boundary
City Limits
Subject Area

N

DONNEGAN PRIVATE TIMBER BARN

HALL COUNTY, GEORGIA

PROJECT DATA:

GEORGIA BUILDING CODES:
2018 INTERNATIONAL BUILDING CODE (IBC) WITH AMENDMENTS

OCCUPANCY CLASSIFICATION
INTERNATIONAL BUILDING CODE (IBC)
IBC 311: GROUP S-1, STORAGE

BUILDING CONSTRUCTION CLASSIFICATION
PRIMARY CODE - IBC 602.2: TYPE IV - TYPE IV CONSTRUCTION IN WHICH THE BUILDING ELEMENTS LISTED IN TABLE 601 ARE OF TIMBER MATERIALS.

ALLOWABLE HEIGHT IN FEET ABOVE GRADE
CODE: IBC TABLE 504.3, ALLOWABLE HEIGHT IN FEET ABOVE GRADE PLANE.
GROUP S-1 32 FEET ALLOWED

ALLOWABLE NUMBER STORIES ABOVE GRADE
CODE: IBC TABLE 504.4, ALLOWABLE NUMBER OF STORIES ABOVE GRADE PLANE.
GROUP S-1 1 STORIES ALLOWED

ALLOWABLE AREA IN SQUARE FEET
CODE: IBC TABLE 506.2, ALLOWABLE AREA FACTOR IN SQUARE FEET.
GROUP S-1 8000 S.F. 12,000 SQUARE FEET ALLOWED

NUMBER OF OCCUPANTS
BUILDING TOTAL: 8 OCCUPANTS

FIRE PROTECTION SYSTEMS
MODIFICATION NUMBER: IBC 2018 09.
SECTION: IBC 903.2.9. GROUP A-3
NO SPRINKLER SYSTEM REQUIRED

SMOKE AND HEAT VENTS
IBC 910.2.1 GROUP A-3 GROUP A-3 OCCUPANCY LESS THAN 15,000SF - SMOKE VENTS ARE NOT REQUIRED.

FOUNDATION DRAIN
CODE:IBC CHAPTER 18
IBC 1805.4.2 FOUNDATION DRAIN. A DRAIN SHALL BE PLACED AROUND THE PERIMETER OF A FOUNDATION THAT CONSISTS OF GRAVEL OR CRUSHED STONE CONTAINING NOT MORE THAN 10-PERCENT MATERIAL PASSED THROUGH A NO. 4 SIEVE. THE DRAIN SHALL EXTEND A MINIMUM OF 12 INCHES BEYOND THE OUTSIDE EDGE OF THE FOOTING. THE THICKNESS SHALL BE SUCH THAT THE BOTTOM OF THE DRAIN IS NOT HIGHER THAN THE BOTTOM OF THE BASE UNDER THE FLOOR, AND THAT THE TOP OF THE DRAIN IS NOT LESS THAN 6 INCHES ABOVE THE TOP OF THE FOOTING. THE TOP OF THE DRAIN SHALL BE COVERED WITH AN APPROVED FILTER MEMBRANE MATERIAL. WHERE A DRAIN TILE OR PERFORATED PIPE IS USED, THE INVERT OF THE PIPE OR TILE SHALL NOT BE HIGHER THAN THE FLOOR ELEVATION. THE TOP OF JOINTS OR THE TOP OF PERFORATIONS SHALL BE PROTECTED WITH AN APPROVED FILTER MEMBRANE MATERIAL. THE PIPE OR TILE SHALL BE PLACED ON NOT LESS THAN 2 INCHES OF GRAVEL OF CRUSHED STONE COMPLYING WITH SECTION 1805.4.1, AND SHALL BE COVERED WITH NOT LESS THAN 6 INCHES OF THE SAME MATERIAL.

1805.4.3 DRAINAGE DISCHARGE. THE FLOOR BASE AND FOUNDATION PERIMETER DRAIN SHALL DISCHARGE BY GRAVITY OR MECHANICAL MEANS INTO AN APPROVED DRAINAGE SYSTEM THAT COMPLIES WITH THE INTERNATIONAL PLUMBING CODE.

PROJECT: PROJECT COMPLIES WITH THE CODE CRITERIA.

GENERAL NOTES

1. MAXIMUM TRAVEL DISTANCE TO EXIT - 70FT. (IBC TABLE 1017.2)
2. MINIMUM CLEAR OPENING OF EXITS DOORS - 36 INCHES (ADA)
3. EGRESS WITH PER PERSON SERVED - 0.20 LEVEL (TABLE 1005.3.2)
4. FIRE BARRIERS NOT REQUIRED: IBC 903.2.9,
5. PROJECT DOES HOT HAVE AN ATTIC, UNDER-FLOOR OR OTHER CONCEALED SPACES.
7. ALL INTERIOR AND EXTERIOR COLORS AND FINISHES PER OWNER

FRAMING PERSPECTIVE

SCOPE OF WORK SUMMARY

THIS PROJECT IS TO CONSTRUCT A TIMBER-FRAMED BARN FOR EVENTS.

THERE IS NO EXISTING RESIDENCE ON THE PROPERTY. THE NEW BARN STRUCTURE WILL NOT INCLUDE BATHROOM.

PROJECT DIRECTORY

STRUCTURAL ENGINEER:
DUNLAP ASSOCIATES CONSULTING ENGINEERS
48 BERKELEY ROAD
AVONDALE ESTATES
678-581-1000
WWW.DA-ENGINEERS.COM
CONTACT: STEVE DUNLAP, P.E.

CONTRACTOR:
WOODSTAR TIMBER PRODUCTS, INC.
EMAIL: woodstartimber@gmail.com
706-768-5025
CONTACT: DARRYL SIMMS

LIST OF DRAWINGS

DWG #	DRAWING NAME
ARCHITECTURAL	
T1	COVER SHEET
STRUCTURAL	
S0.1	NOTES
S1.0	FOUNDATION PLAN
S1.1	ROOF FRAMING PLAN
S1.2	FRAMING ELEVATIONS
S	

EGRESS BASED UPON OCCUPANT LOAD AND COMMON PATH OF EGRESS TRAVEL DISTANCE

IBC TABLE 1006.2.1 SPACES WITH ONE EXIT OR EXIT ACCESS DOORWAY

GROUP S-1 8 OCCUPANTS 100 FT. EGRESS TRAVEL WITHOUT SPRINKLER

PROJECT: GROUP S-1 EGRESS TRAVEL DISTANCE COMPLIES WITH THE CODE.

MEANS OF EGRESS ILLUMINATION

IBC 1006.2.1 TWO EXITS OR EXIT ACCESS DOORWAYS FROM ANY SPACE SHALL BE PROVIDED WHERE THE DESIGN OCCUPANT LOAD OR COMMON PATH OF EGRESS TRAVEL DISTANCE EXCEEDS THE VALUES LISTED IN TABLE 1006.2.1. THE CUMULATIVE OCCUPANT LOAD FROM ADJACENT ROOMS, AREAS, OR SPACES SHALL BE DETERMINED IN ACCORDANCE WITH SECTION 1004.2.

IBC TABLE 1006.2.1 SPACES WITH ONE EXIT OR EXIT ACCESS DOORWAY

OCCUPANCY	MAX OCCUPANT LOAD	MAX. COMMON PATH OF EGRESS TRAVEL WITHOUT SPRINKLER SYSTEM
GROUP S-1	8	OL < 30 = 100 FEET

Copyright © 2021, DA

Revisions		
0	12/29/21	FOR PERMIT

Seal:

GEORGIA REGISTERED No. PE21486 PROFESSIONAL 12-5-21 ENGINEER STEVE A. DUNLAP

Drawing Title: COVER SHEET

Released for Construction Date:

Project Title: DONNEGAN PRIVATE BARN
HALL COUNTY, GEORGIA
for WOODSTAR TIMBER

Dunlap Associates
Engineering Services
48 Berkeley Road
Avondale Estates, GA 30002
678-581-1000
salandunlap5@gmail.com

T-1

Copyright © 2021, DA

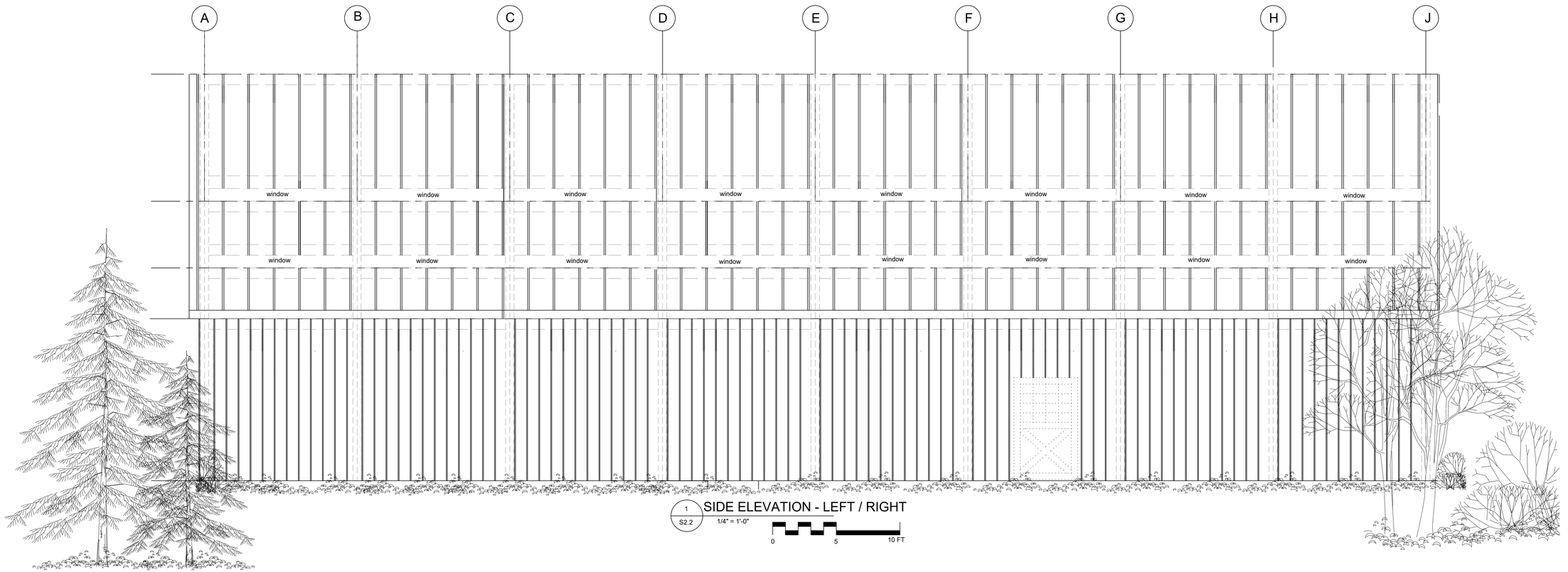

1 / S2.2 SIDE ELEVATION - LEFT / RIGHT

1/4" = 1'-0"

0 5 10 FT

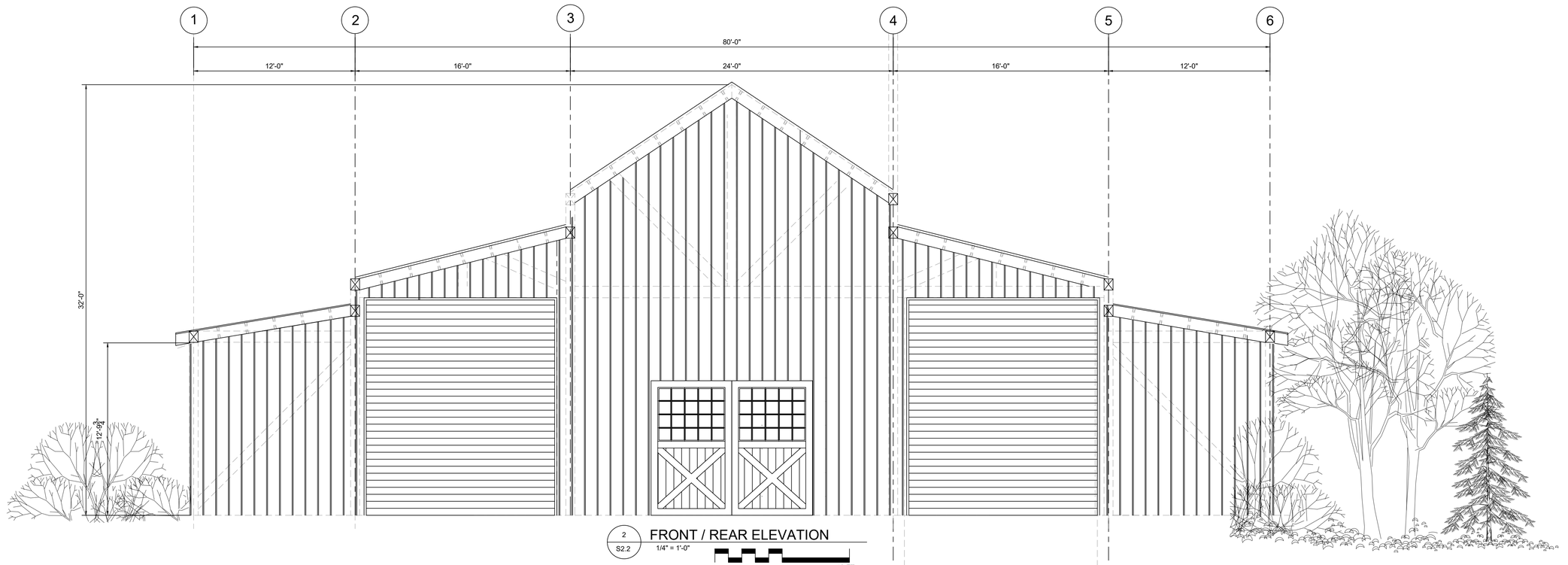

2 / S2.2 FRONT / REAR ELEVATION

1/4" = 1'-0"

0 5 10 FT

Revisions		
0	12/20/21	FOR PERMIT

Seal:

GEORGIA REGISTERED No. PE21486 PROFESSIONAL 12-5-21 ENGINEER STATE A. DUNLAP

Drawing Title: ELEVATIONS

Released for Construction Date:

Project Title: DONNEGAN PRIVATE BARN
HALL COUNTY, GEORGIA
for WOODSTAR TIMBER

Dunlap Associates
Engineering Services
48 Berkeley Road
Avondale Estates, GA 30002
678-581-1000
www.da-engineers.com

S0.1

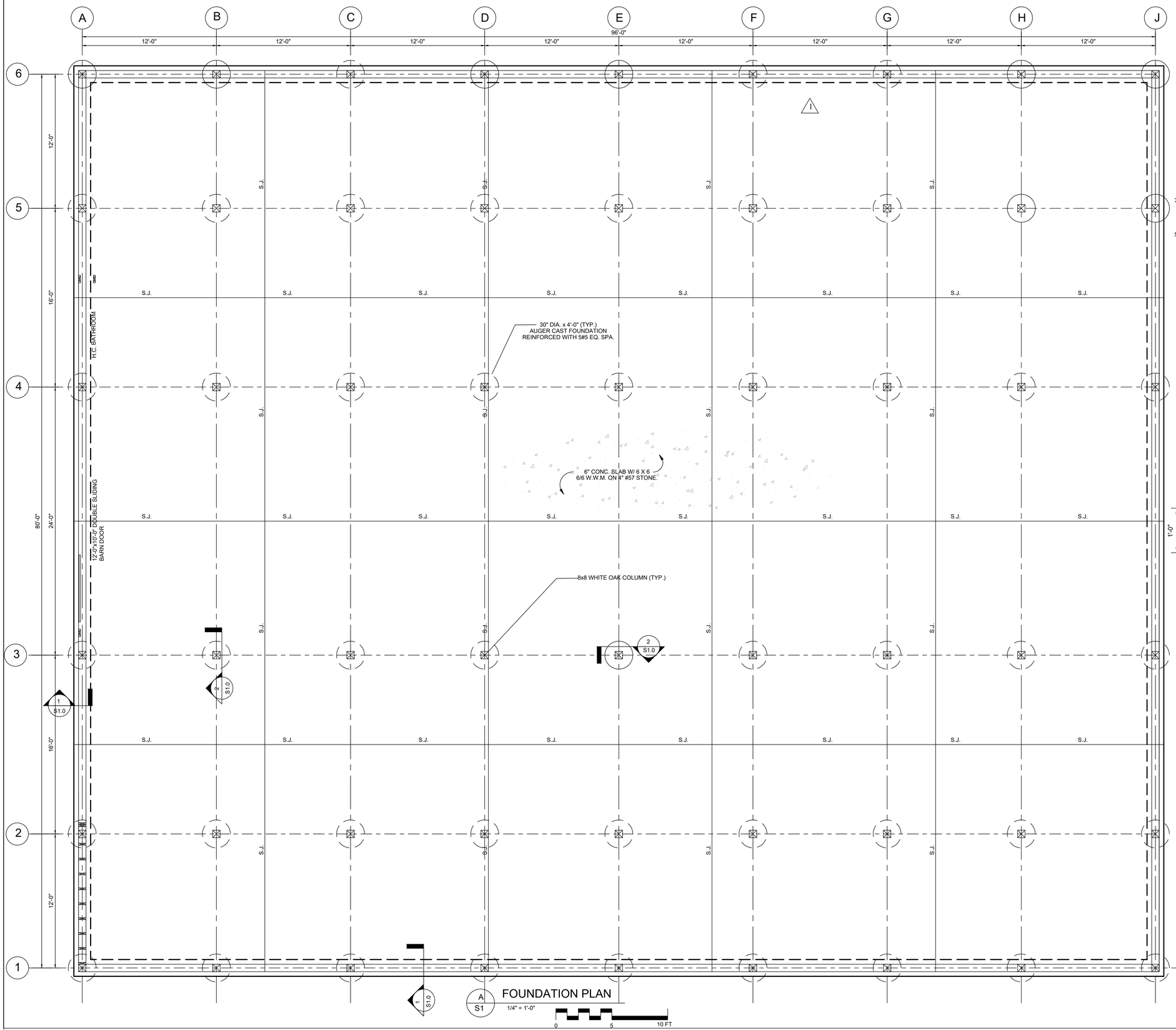

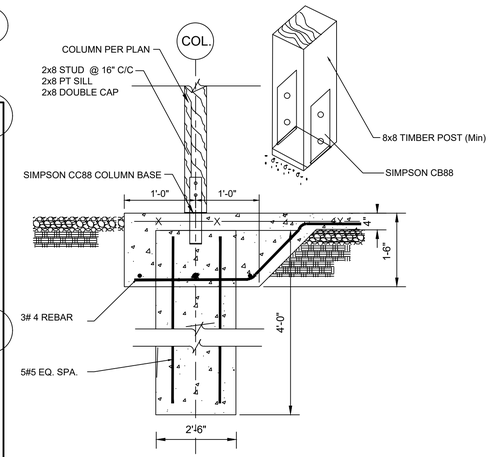

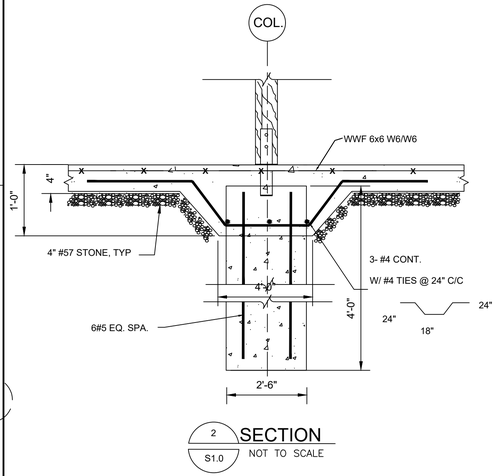

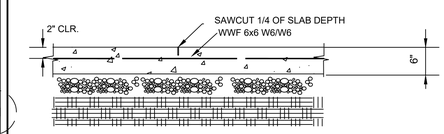

SECTION - SAWN JOINT (S.J.)

Copyright © 2021, DA

Revisions		
1	12/15/21	FOR PERMIT

Seal:

GEORGIA REGISTERED No. PE21486 PROFESSIONAL 12-5-21 ENGINEER STEVE A. DUNLAP

Drawing Title: FOUNDATION PLAN / SECTIONS

Released for Construction Date:

Project Title: DONNEGAN PRIVATE BARN
HALL COUNTY, GEORGIA
for WOODSTAR TIMBER

Dunlap Associates
Engineering Services
48 Berkeley Road
Avondale Estates, GA 30002
678-581-1000
SALANDUNLAP5@GMAIL.COM

S1.0

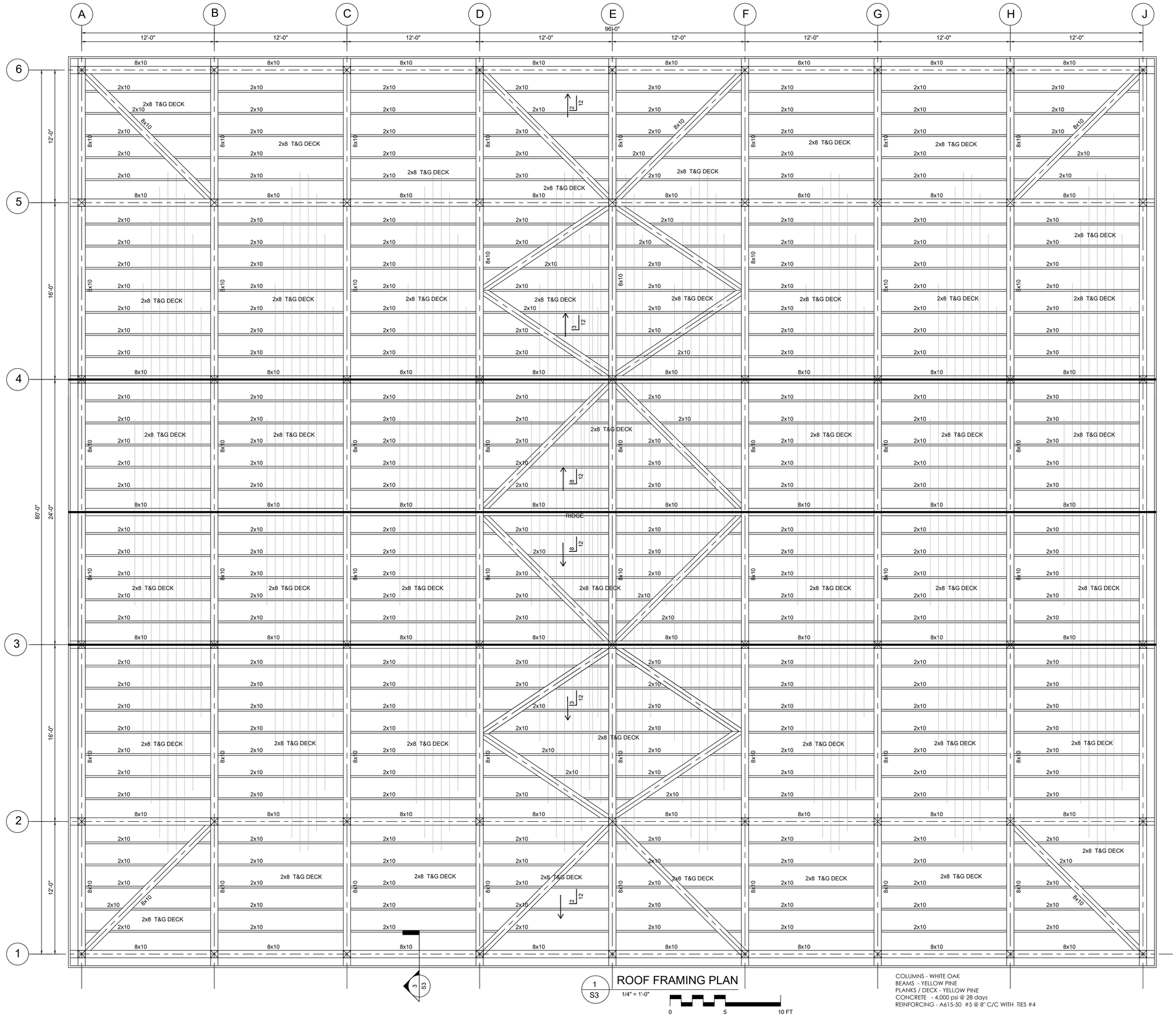

1 / S3 ROOF FRAMING PLAN

1/4" = 1'-0"

0 5 10 FT

COLUMNS - WHITE OAK
BEAMS - YELLOW PINE
PLANKS / DECK - YELLOW PINE
CONCRETE - 4,000 psi @ 28 days
REINFORCING - A615-50 #5 @ 8" C/C WITH TIES #4

Copyright © 2021, DA

Revisions		
0	12-20-21	FOR PERMIT

Seal:

GEORGIA REGISTERED No. PE21486 PROFESSIONAL 12-5-21 ENGINEER STEVE A. DUNLAP

Drawing Title: ROOF FRAMING PLAN

Released for Construction Date:

Project Title: DONNEGAN PRIVATE BARN
HALL COUNTY, GEORGIA
for WOODSTAR TIMBER

Dunlap Associates
Engineering Services
48 Berkeley Road
Avondale Estates, GA 30002
678-581-1000
www.da-engineers.com

S1.1

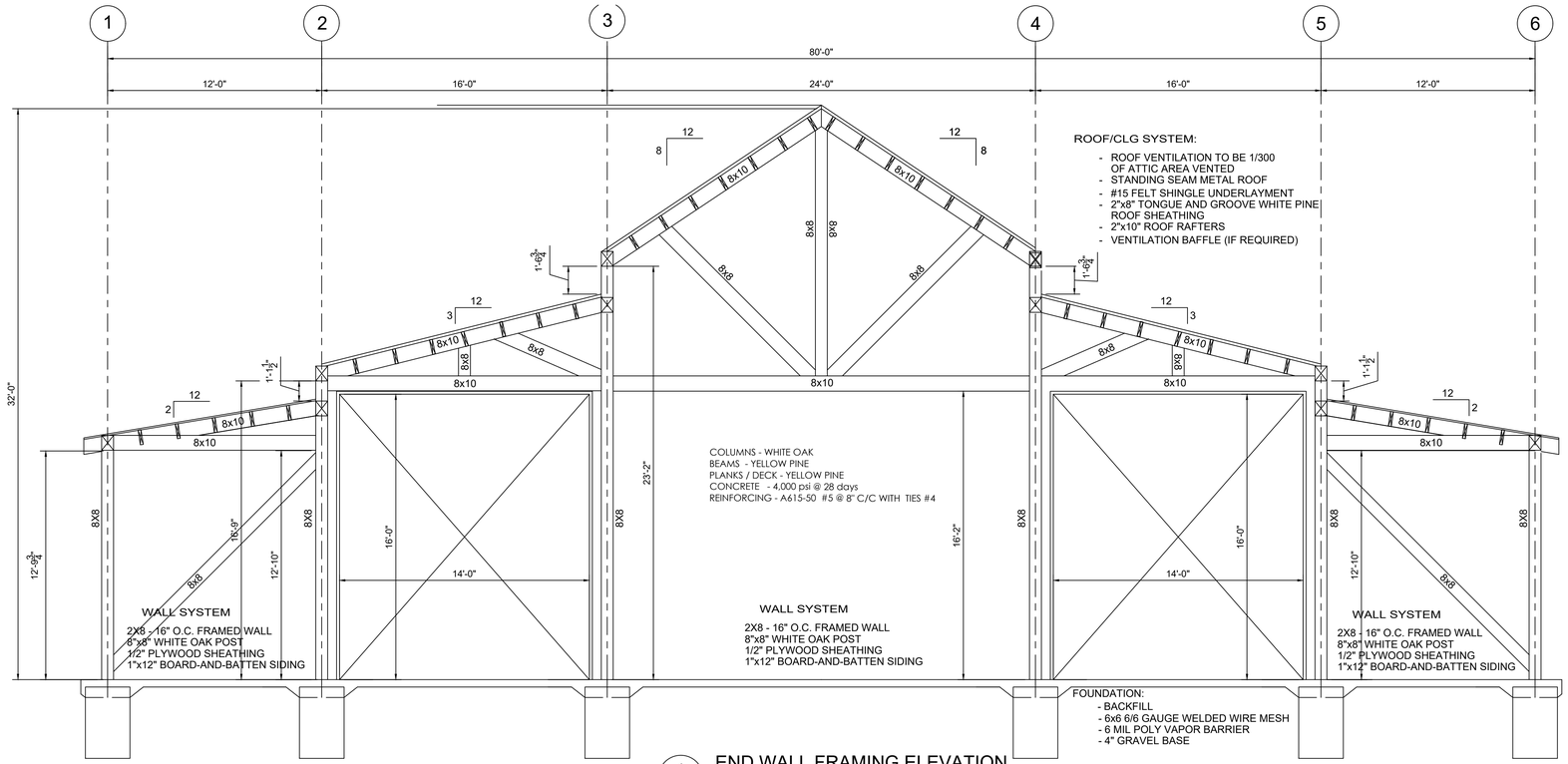

1 / S4 END WALL FRAMING ELEVATION

1/4" = 1'-0"

0 5 10 FT

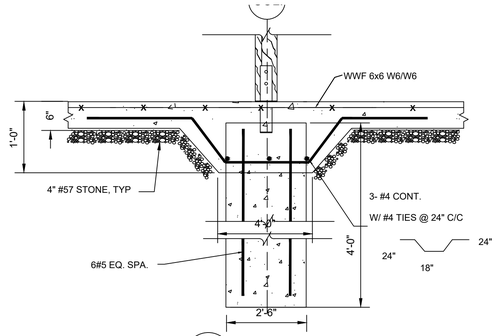

4 / S4 SECTION

NOT TO SCALE

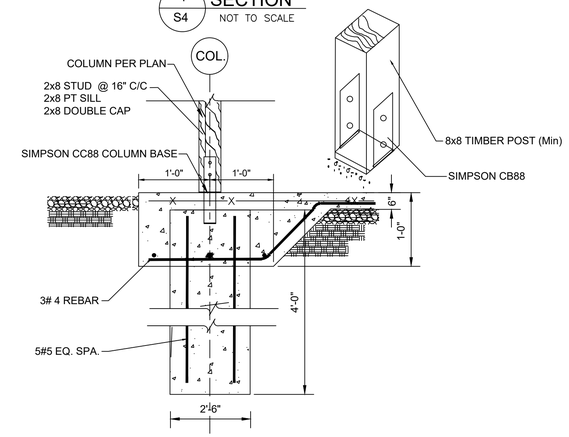

3 / S4 SECTION

NOT TO SCALE

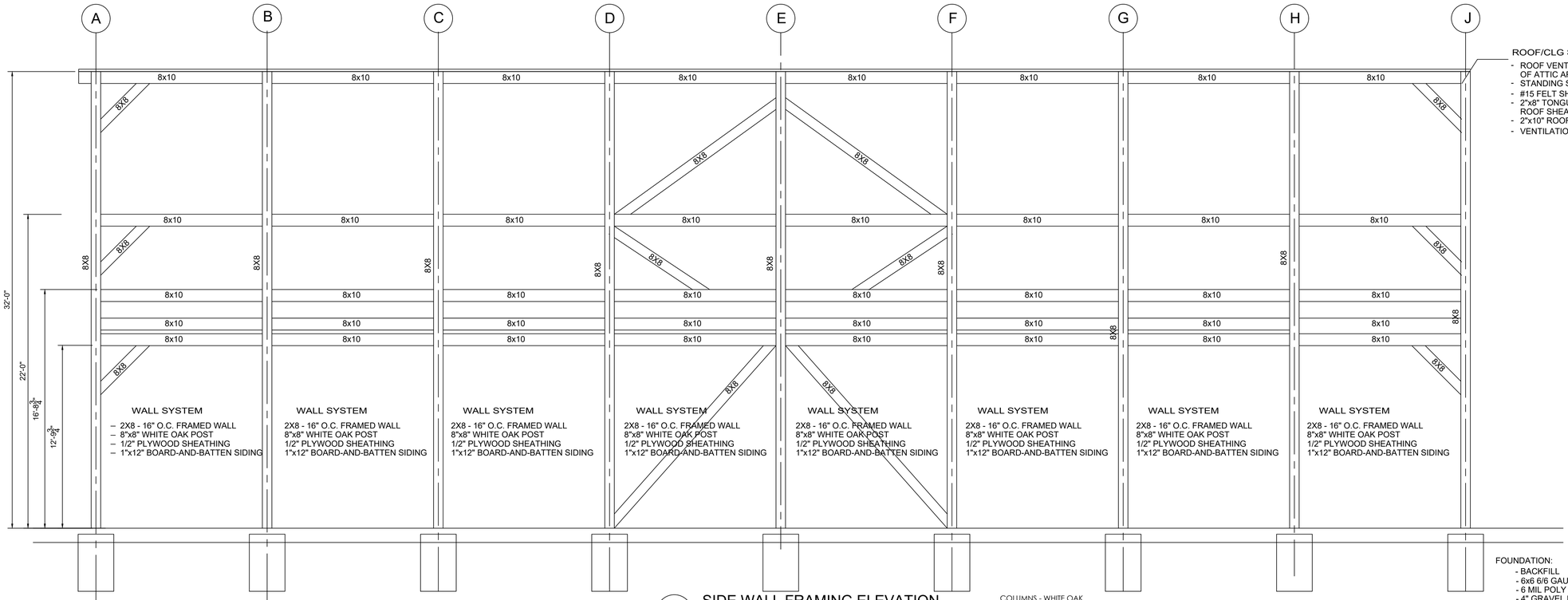

2 / S4 SIDE WALL FRAMING ELEVATION

1/4" = 1'-0"

COLUMNS - WHITE OAK
BEAMS - YELLOW PINE
PLANKS / DECK - YELLOW PINE
CONCRETE - 4,000 psi @ 28 days
REINFORCING - A615-50 #5 @ 8" C/C WITH TIES #4

Copyright © 2021, DA

Revisions	12-20-21	FOR PERMIT
0		

Seal:

GEORGIA REGISTERED No. PE21486 PROFESSIONAL 12-5-21 ENGINEER STEVE A. DUNLAP

Drawing Title: SIDE ELEVATION

Released for Construction Date:

Project Title: DONNEGAN PRIVATE BARN
HALL COUNTY, GEORGIA
for WOODSTAR TIMBER

Dunlap Associates
Engineering Services
48 Berkeley Road
Avondale Estates, GA 30002
678-581-1000
SALANDUNLAP5@GMAIL.COM

S1.2

Copyright © 2021, DA

TABLE 2304.9.1
FASTENING SCHEDULE

CONNECTION	FASTENING[a,b,h]	LOCATION
1. Joist to sill or girder	3 - 8d common 3 - 3" × 0.131" nails 3 - 3" 14 gage staples	toenail
2. Bridging to joist	2 - 8d common 2 - 3" × 0.131" nails 2 - 3" 14 gage staples	toenail each end
3. 1" × 6" subfloor or less to each joist	2 - 8d common	face nail
4. Wider than 1" × 6" subfloor to each joist	3 - 8d common	face nail
5. 2" subfloor to joist or girder	2 - 16d common	blind and face nail
6. Sole plate to joist or blocking	16d at 16" o.c. 3" × 0.131" nails at 8" o.c. 3" 14 gage staples at 12" o.c.	typical face nail
Sole plate to joist or blocking at braced wall panel	3 - 16d at 16" 4 - 3" × 0.131" nails at 16" 4 - 3" 14 gage staples per 16"	braced wall panels
7. Top plate to stud	2 - 16d common 3 - 3" × 0.131" nails 3 - 3" 14 gage staples	end nail
8. Stud to sole plate	4 - 8d common 4 - 3" × 0.131" nails 3 - 3" 14 gage staples	toenail
	2 - 16d common 3 - 3" × 0.131" nails 3 - 3" 14 gage staples	end nail
9. Double studs	16d at 24" o.c. 3" × 0.131" nail at 8" o.c. 3" 14 gage staple at 8" o.c.	face nail
10. Double top plates	16d at 16" o.c. 3" × 0.131" nail at 12" o.c. 3" 14 gage staple at 12" o.c.	typical face nail
Double top plates	8-16d common 12 - 3" × 0.131" nails 12 - 3" 14 gage staples	lap splice
11. Blocking between joists or rafters to top plate	3 - 8d common 3 - 3" × 0.131" nails 3 - 3" 14 gage staples	toenail
12. Rim joist to top plate	8d at 6" (152 mm) o.c. 3" × 0.131" nail at 6" o.c. 3" 14 gage staple at 6" o.c.	toenail
13. Top plates, laps and intersections	2 - 16d common 3 - 3" × 0.131" nails 3 - 3" 14 gage staples	face nail
14. Continuous header, two pieces	16d common	16" o.c. along edge
15. Ceiling joists to plate	3 - 8d common 5 - 3" × 0.131" nails 5 - 3" 14 gage staples	toenail
16. Continuous header to stud	4 - 8d common	toenail

(continued)

TABLE 2304.9.1—continued
FASTENING SCHEDULE

CONNECTION	FASTENING[a,b]	LOCATION
17. Ceiling joists, laps over partitions (see Section 2308.10.4.1, Table 2308.10.4.1)	3 - 16d common minimum, Table 2308.10.4.1 4 - 3" × 0.131" nails 4 - 3" 14 gage staples	face nail
18. Ceiling joists to parallel rafters (see Section 2308.10.4.1, Table 2308.10.4.1)	3 - 16d common minimum, Table 2308.10.4.1 4 - 3" × 0.131" nails 4 - 3" 14 gage staples	face nail
19. Rafter to plate (see Section 2308.10.1, Table 2308.10.1)	3 - 8d common 3 - 3" × 0.131" nails 3 - 3" 14 gage staples	toenail
20. 1" diagonal brace to each stud and plate	2 - 8d common 2 - 3" × 0.131" nails 2 - 3" 14 gage staples	face nail
21. 1" × 8" sheathing to each bearing wall	2 - 8d common	face nail
22. Wider than 1"× 8" sheathing to each bearing	3 - 8d common	face nail
23. Built-up corner studs	16d common 3" × 0.131" nails 3" 14 gage staples	24" o.c. 16" o.c. 16" o.c.
24. Built-up girder and beams	20d common 32" o.c. 3" × 0.131" nail at 24" o.c. 3" 14 gage staple at 24" o.c.	face nail at top and bottom staggered on opposite sides
	2 - 20d common 3 - 3" × 0.131" nails 3 - 3" 14 gage staples	face nail at ends and at each splice
25. 2" planks	16d common	at each bearing
26. Collar tie to rafter	3 - 10d common 4 - 3" × 0.131" nails 4 - 3" 14 gage staples	face nail
27. Jack rafter to hip	3 - 10d common 4 - 3" × 0.131"nails 4 - 3" 14 gage staples	toenail
	2 - 16d common 3 - 3" × 0.131" nails 3 - 3" 14 gage staples	face nail
28. Roof rafter to 2-by ridge beam	2 - 16d common 3 - 3" × 0.131" nails 3 - 3" 14 gage staples	toenail
	2 - 16d common 3 - 3" × 0.131" nails 3 - 3" 14 gage staples	face nail
29. Joist to band joist	3 - 16d common 5 - 3" × 0.131" nails 5 - 3" 14 gage staples	face nail

(continued)

TABLE 2304.9.1—continued
FASTENING SCHEDULE

CONNECTION	FASTENING[a,b]	LOCATION
30. Ledger strip	3 - 16d common 4 - 3" × 0.131" nails 4 - 3" 14 gage staples	face nail
31. Wood structural panels and particleboard:[b] Subfloor, roof and wall sheathing (to framing):	½" and less	6d[e,i] 2 ⅜" × 0.113" nail[e] 1 ¾" 16 gage[g] 8d[e] or 6d[e] 2 ⅜" × 0.113" nail[e] 2" 16 gage[g] 8d[e]
	19/32" to ¾"	
	¾" to 1"	
Single Floor (combination subfloor-underlayment to framing):	1 ⅛" to 1 ¼"	10d[d] or 8d[e]
	¾" and less	6d[e]
	⅞" to 1"	8d[e]
	1 ⅛" to 1 ¼"	10d[d] or 8d[e]
32. Panel siding (to framing)	½" or less	6d[f]
	⅝"	8d[f]
33. Fiberboard sheathing:[g]	½"	No. 11 gage roofing nail[h] 6d common nail No. 16 gage staple[j]
	25/32"	No. 11 gage roofing nail[h] 8d common nail No. 16 gage staple[j]
34. Interior paneling	¼"	4d[k]
	⅜"	6d[k]

For SI: 1 inch = 25.4 mm.
a. Common or box nails are permitted to be used except where otherwise stated.
b. Nails spaced at 6 inches on center at edges, 12 inches at intermediate supports except 6 inches at supports where spans are 48 inches or more. For nailing of wood structural panel and particleboard diaphragms and shear walls, refer to Section 2305. Nails for wall sheathing are permitted to be common, box or casing.
c. Common or deformed shank.
d. Common.
e. Deformed shank.
f. Corrosion-resistant siding or casing nail.
g. Fasteners spaced 3 inches on center at exterior edges and 6 inches on center at intermediate supports.
h. Corrosion-resistant roofing nails with ⅜-inch-diameter head and 1½-inch length for ½-inch sheathing and 1 ¾-inch length for ¾-inch sheathing.
i. Corrosion-resistant staples with nominal ⅞-inch crown and 1 ⅛-inch length for ½-inch sheathing and 1 ¼-inch length for ¾-inch sheathing. Panel supports at 16 inches (20 inches if strength axis in the long direction of the panel, unless otherwise marked).
j. Casing or finish nails spaced 6 inches on panel edges, 12 inches at intermediate supports.
k. Panel supports at 24 inches. Casing or finish nails spaced 6 inches on panel edges, 12 inches at intermediate supports.
l. For roof sheathing applications, 8d nails are the minimum required for wood structural panels.
m. Staples shall have a minimum crown width of ⅞ inch.
n. For roof sheathing applications, fasteners spaced 4 inches on center at edges, 8 inches at intermediate supports.
o. Fasteners spaced 6 inches on center at edges, 8 inches at intermediate supports for subfloor and wall sheathing and 3 inches on center at edges, 6 inches at intermediate supports for roof sheathing.
p. Fasteners spaced 4 inches on center at edges, 8 inches at intermediate supports.

Product Description

The Heavy Duty (HD) connectors utilize a 1 1/2" diameter connector tube and 6" long, 1" wide expansion pins. The tube is machined from ASTM A500 Grade C steel, and the pins are cast in ASTM A 47M, grade 32510 malleable iron. These are the same materials used to manufacture the standard Timberlinx connector tubes and pins. The following options for connector tubes are available:

- HDA019 – 19" long connector with a slot for one expansion pin at each end (similar to the A095)
- HDA095 – 9 1/2" long half-connector with a slot for one expansion pin and 1 1/4" – 7 UNC internal threads (similar to the A475)
- HDAA095 – 9 1/2" long half-connector with slots for two expansion pins and 1 1/4" – 7 UNC internal threads (similar to the AA675)

An illustration of HDAA095 connector is shown below. The following photo shows the relative sizes of the HDA095 and the A475 tubes with their expansion pins.

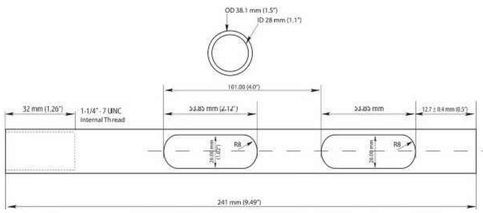

Timberlinx HDAA095 Connector Tube

A475 (left) and HDA095 (right) Assemblies

Product Capacity

The load capacity in tension of the HD connectors has been determined by calculation and limited physical testing. The following limit states are considered.

Tube Tension – The net cross-sectional area of the HD connector tube at the slot is 0.34 in^2, whereas that of the standard (1" diameter) tube is 0.16 in^2. Given that the two tubes are manufactured from the same material, the HD tube has net-section yield capacity in tension that is 2.1 times that of the standard tube.

Pin Dowel Bearing – The HD expansion pin in a 1 9/16" (40mm) drill hole has a dowel-bearing contact area of 4.43 in^2, whereas that of the standard expansion pin in a 1 1/8" drill hole is 2.16 in^2. Thus, the dowel bearing capacity of the HD pin is 2.05 times that of the standard pin.

Pin Bending – Physical testing of the HD and standard expansion pins in four-point pending indicate that the yield moment for the HD pin is 1.45 k-ft, whereas that for the standard pin is 0.34 k-ft, an increase of 4.2 times.

Threaded Rod Tension – The 1 1/4"-7 UNC threaded rod has a net tensile area of 0.969 in^2, whereas that of the 7/8"-9 UNC threaded rod is 0.462 in^2. For rods manufactured of the same material, the 1 1/4" rod is 2.1 times stronger than the 7/8" rod.

Recommendation – Timberlinx recommends that designers use a multiplier of 2.0 on the capacity of the standard connector when designing connections using the corresponding HD connector loaded in tension.

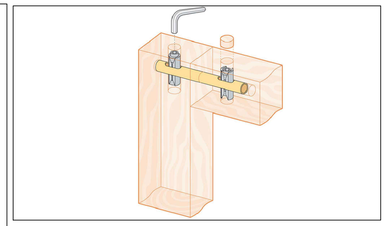

Revisions
0

Seal:

GEORGIA REGISTERED No. PE21486 PROFESSIONAL 12-5-2021 ENGINEER STEVE A. DUNLAP

Drawing Title: NOTES

Released for Construction Date:

Project Title: DONNEGAN PRIVATE BARN
HALL COUNTY, GEORGIA
for WOODSTAR TIMBER

Dunlap Associates
Engineering Services
48 Berkeley Road
Avondale Estates, GA 30002
678-581-1000
www.da-engineers.com

S2.0

Copyright © 2021, DA

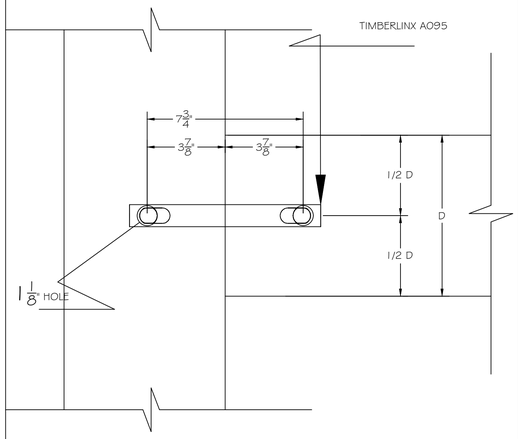

SIDE VIEW

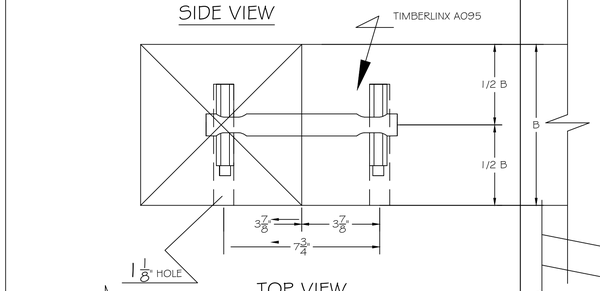

TOP VIEW

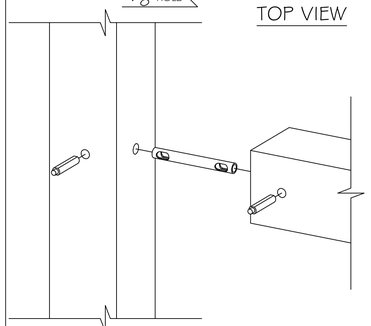

BEAM TO POST

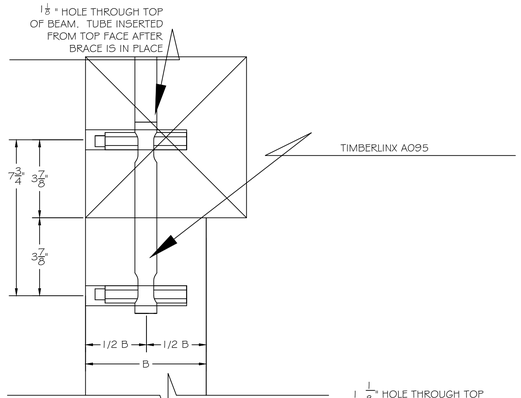

SIDE VIEW

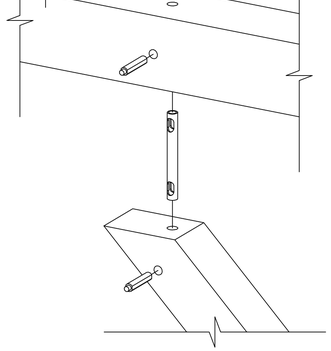

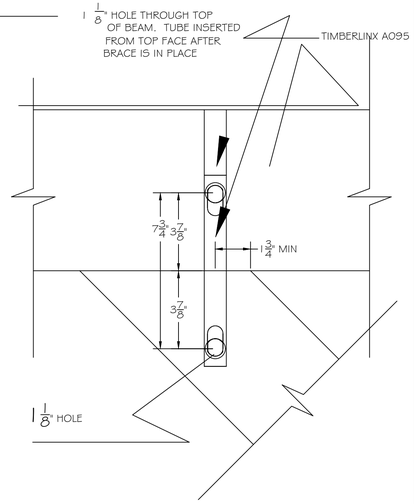

KNEE BRACE TO BEAM

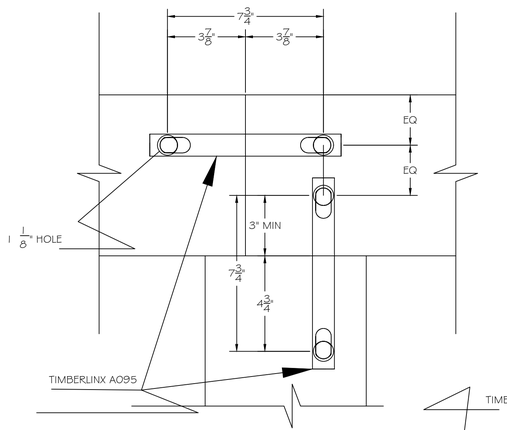

SIDE VIEW

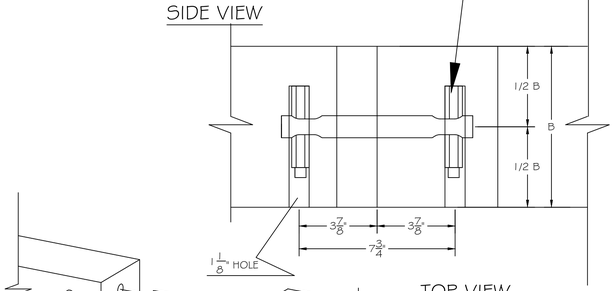

TOP VIEW

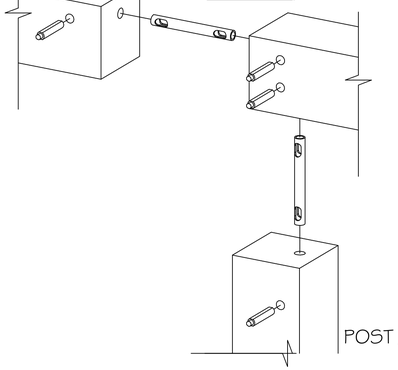

POST / PLATE LAP

Revisions
0

Seal:

GEORGIA REGISTERED No. PE21488 PROFESSIONAL 12-5-21 ENGINEER STEVE A. DUNLAP

Drawing Title: CONNECTIONS

Released for Construction Date:

Project Title: DONNEGAN PRIVATE BARN
HALL COUNTY, GEORGIA
for WOODSTAR TIMBER

Dunlap Associates
Engineering Services
48 Berkeley Road
Avondale Estates, GA 30002
678-581-1000
www.da-engineers.com

S2.1

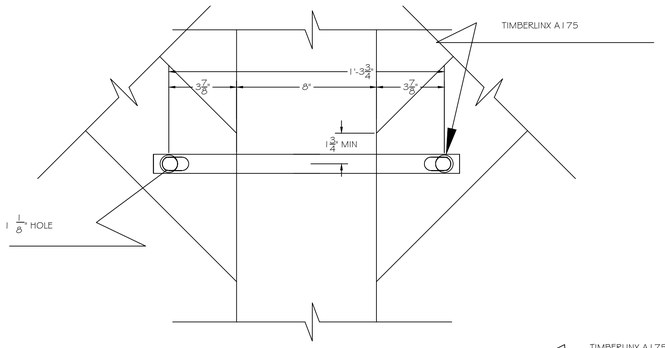

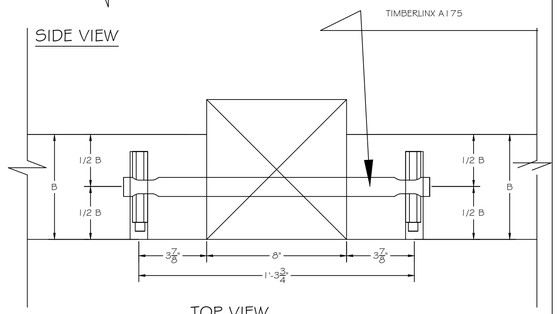

TOP VIEW

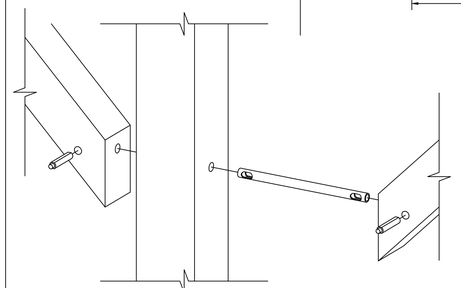

PAIR OF KNEE BRACES TO POST

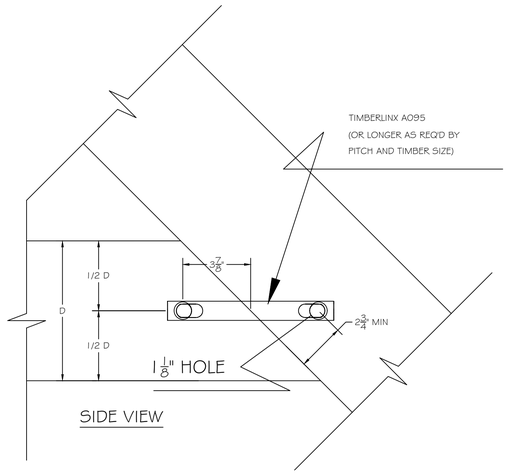

SIDE VIEW

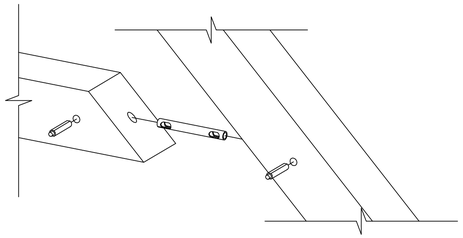

COLLAR TIE TO RAFTER

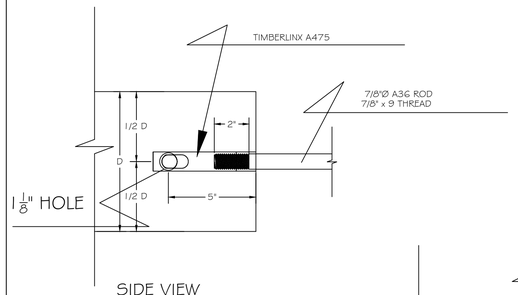

SIDE VIEW

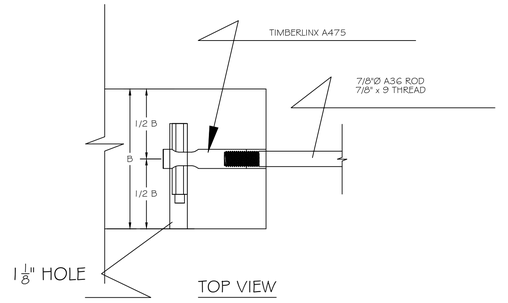

TOP VIEW

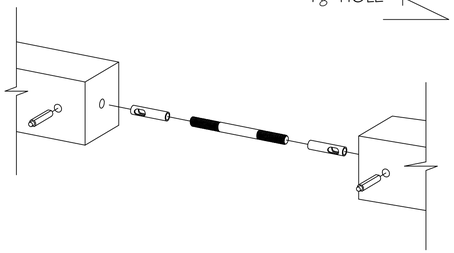

TENSION ROD CONNECTOR

Copyright © 2021, DA

Revisions
0

Seal:

GEORGIA REGISTERED No. PE21486 PROFESSIONAL 12-5-21 ENGINEER STEVE A. DUNLAP

Drawing Title: CONNECTIONS

Released for Construction Date:

Project Title: DONNEGAN PRIVATE BARN
HALL COUNTY, GEORGIA
for WOODSTAR TIMBER

Dunlap Associates
Engineering Services
48 Berkeley Road
Avondale Estates, GA 30002
678-581-1000
www.da-engineers.com

S2.2

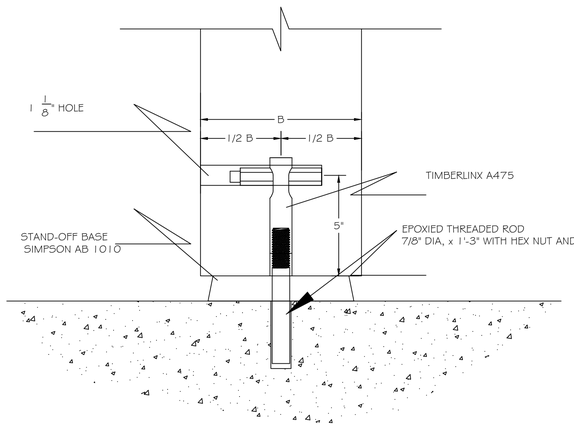

SIDE VIEW

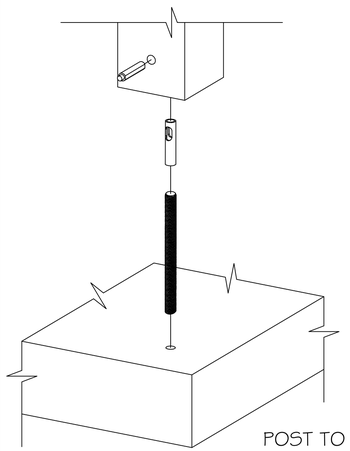

POST TO CONCRETE SLAB

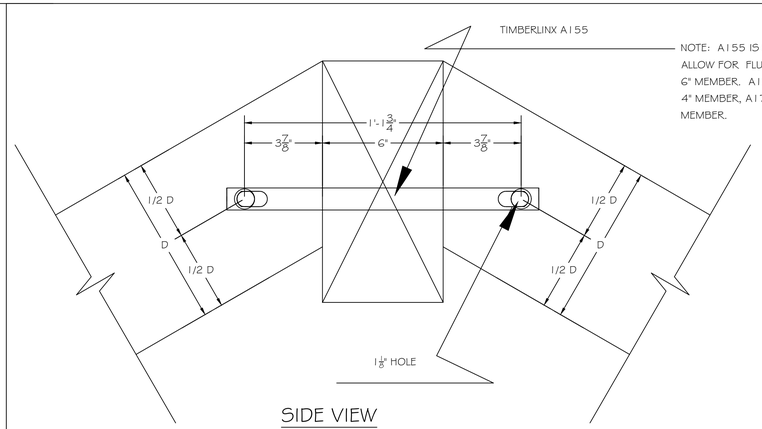

SIDE VIEW

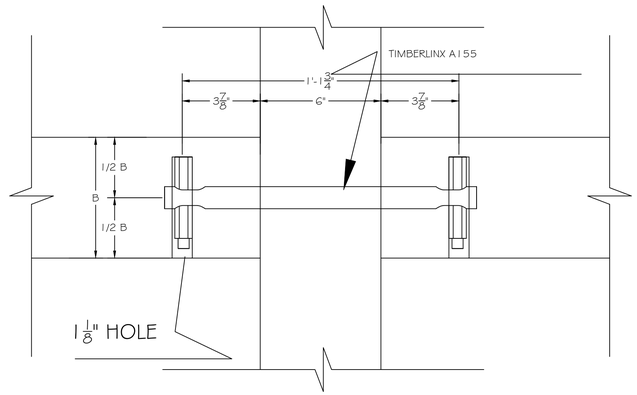

TOP VIEW

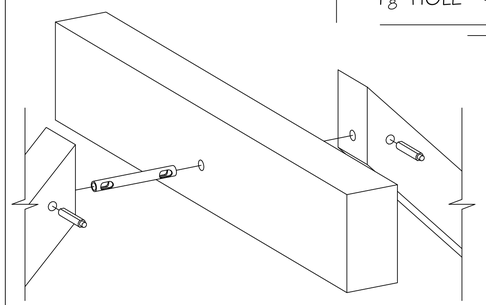

RAFTERS THROUGH RIDGE

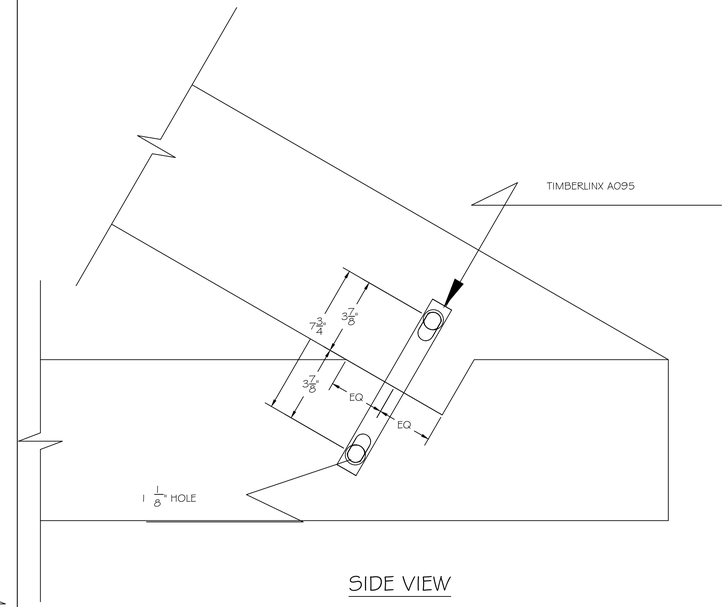

SIDE VIEW

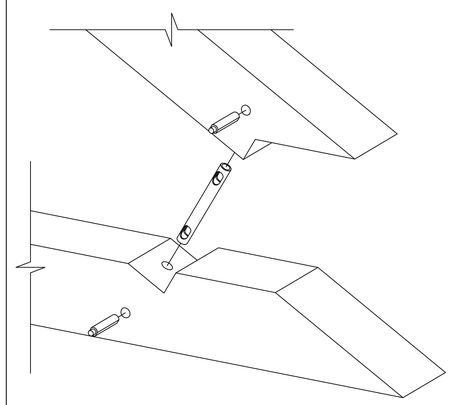

TRUSS HEEL JOINT

Copyright © 2021, DA

Revisions
0

Seal:

GEORGIA REGISTERED No. PE21489 PROFESSIONAL 12-5-21 ENGINEER STEVE A. DUNLAP

Drawing Title: CONNECTIONS

Released for Construction Date:

Project Title: DONNEGAN PRIVATE BARN
HALL COUNTY, GEORGIA
for WOODSTAR TIMBER

Dunlap Associates
Engineering Services
48 Berkeley Road
Avondale Estates, GA 30002
678-581-1000
www.da-engineers.com

S2.3

Copyright © 2021, DA

NOTE: A155 IS DESIGNED TO ALLOW FOR FLUSH JOINTS ON AN 6" MEMBER. A135 WORKS FOR A 4" MEMBER, A175 FOR 8" MEMBER.

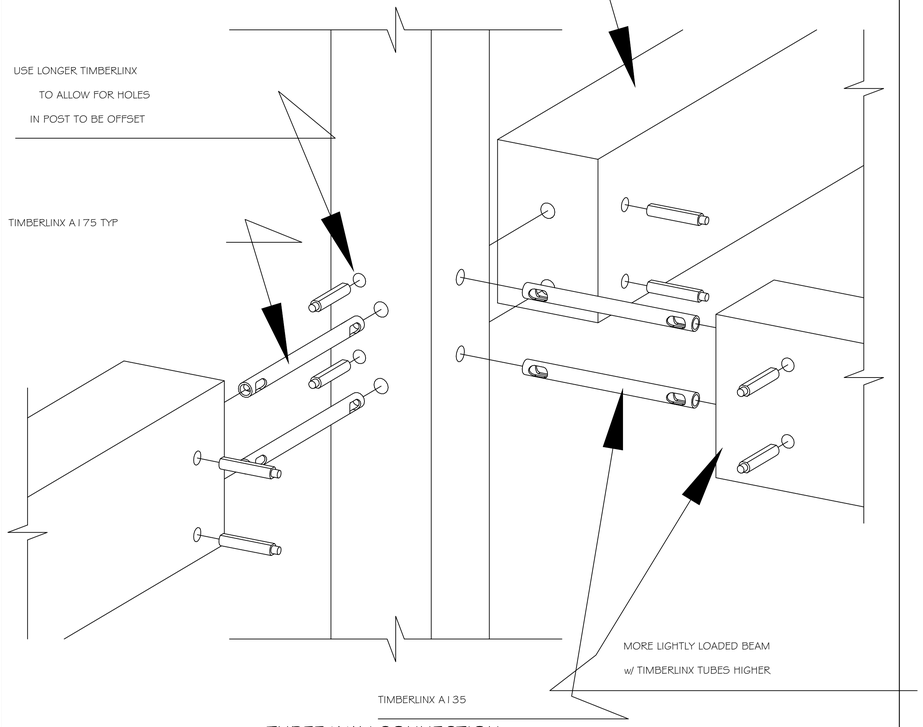

THREE WAY CONNECTION

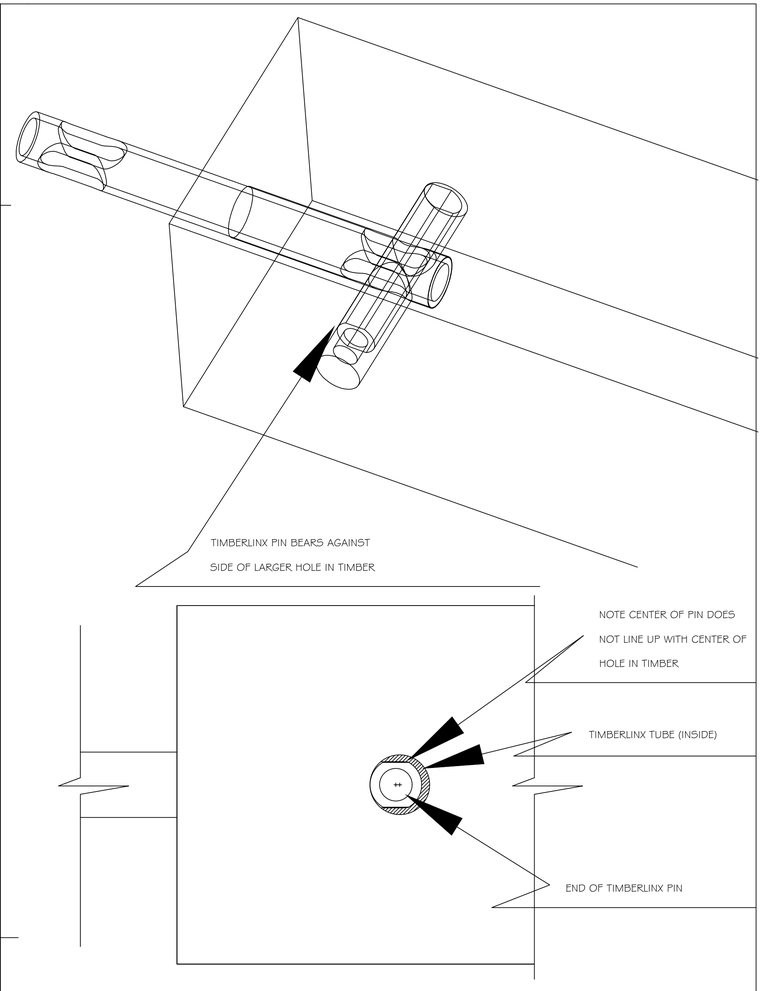

PIN LOCATION DETAIL

Revisions
0

Seal:

GEORGIA REGISTERED No. PE21488 PROFESSIONAL 12-5-21 ENGINEER STEVE A. DUNLAP

Drawing Title: CONNECTIONS

Released for Construction Date:

Project Title: DONNEGAN PRIVATE BARN
HALL COUNTY, GEORGIA
for WOODSTAR TIMBER

Dunlap Associates
Engineering Services
48 Berkeley Road
Avondale Estates, GA 30002
678-581-1000
www.da-engineers.com

S2.4

Anael Dominguez (CDI: Planning)

From: Emily McGahee (Environmental Health)
Sent: Wednesday, May 17, 2023 12:41 PM
To: Anael Dominguez (CDI: Planning); Randi Doveton (CDI: Planning)
Cc: Kelly Hairston (Environmental Health); Chad Harper (Environmental Health)
Subject: HCPC Tentative Agenda 6.5.23

Please find Environmental Health comments below:

Item 1, 3621 Reece Circle, Whitlow: Must meet all Environmental Health residential septic system permitting requirements.

Items 2A/B, 3263 Tanners Mill Road, Dunagan: A detailed business plan must be submitted to Hall County Environmental Health for review. Additional items septic system modification/expansion may be required after review of business plan. Tourist Accommodation permit/plan review and/or Food Service permit/plan review may be required after review of business plan.

Items 3A/B/C, 4375 Peckerwood Road, Gregory: A detailed business plan must be submitted to Hall County Environmental Health for review. Additional items septic system modification/expansion may be required after review of business plan. Food Service permit/plan will be required.

Item 4, 4033 Hidden Hollow Drive: Must meet all Environmental Health residential septic system permitting requirements. A copy of recorded plat showing property in current configuration must be submitted at time of permit application.

Item 5, 5800 Lanier Islands Pkwy: Must meet all Environmental Health commercial septic system permitting requirements. A detailed business plan must be submitted to Hall County Environmental Health for review.

Item 6, Deaton Creek Pkwy, Public Works: No comment

Item 7, Code Amendment: No comment

Emily McGahee
Hall County Environmental Health
Hall County Government Center
2875 Browns Bridge Road
Mailing: PO Box 5901
Gainesville, GA 30504
(770) 531-3973
(770) 531-6767 (fax)

http://dph.georgia.gov/environmental-health (State Website)
http://www.phdistrict2.org/HallCounty.htm (District Website)
http://www.hallcounty.org/devserv/environmental.asp (County Website & Forms)

Anael Dominguez (CDI: Planning)

From: Peevy, Jonathan <jpeevy@dot.ga.gov>
Sent: Thursday, May 11, 2023 4:33 PM
To: Anael Dominguez (CDI: Planning)
Cc: Niebauer, Parker J
Subject: RE: Tentative Planning Agenda for June 5, 20223

CAUTION: This email originated from outside of the organization. Do not click links or open attachments unless you recognize the sender and know the content is safe.

Anael,
The following will require GDOT coordination.

- 3263 Tanners Mill Road
- 5800 Lanier Islands Parkway

Thank you,

Jonathan Peevy, P.E.
Assistant District Traffic Engineer

Georgia Department of Transportation

District 1 Traffic Operations
1475 Jesse Jewell Pkwy
Suite 100
Gainesville, GA, 30501
770.533.8276 office

From: Anael Dominguez (CDI: Planning) <adominguez@hallcounty.org>
Sent: Thursday, May 11, 2023 2:27 PM
Subject: Tentative Planning Agenda for June 5, 20223

Good afternoon –

Here is the Tentative Agenda and Maps for the **Monday, June 5, 2023** Hall County Planning Commission Meeting.

Please use the links to review the documents and respond with comments to Hall County Planning and Development. Failure to provide comments in a timely manner may result in the information not being included in the staff report.

When submitting comments, please include the name of the applicant along with the address of the property with the corresponding comment.

Comments are due by **Thursday, May 18th.** Email comments to Randi (rdoveton@hallcounty.org) and Ana (adominguez@hallcounty.org).

CALL TO ORDER

AGENDA REVIEW

APPROVAL OF MINUTES – May 15, 2023

NEW BUSINESS

1. **3621 Reece Circle** | appeal an administrative decision for a hardship manufactured home, as it relates to §17.350.110 on a 1.01± acre tract located on the south side of Reece Circle at its intersection with A L Mangum Road | Zoned R-II; Tax Parcel 15014 000056A | **Proposed use: hardship mobile home** | * Commission District 3 | **Henry Whitlow, applicant.**

2. (A) **3263 Tanners Mill Road | Use Subject to County Commission Approval |** on a 37.28± acre tract located on the east side of Tanners Mill Road approximately 756 feet from its intersection with Weaver Road | Zoned AR-IV; Tax 15025 000002 **| Proposed use: agri-entertainment venue |** **Commission District 1 | **Paden M. Dunagan, applicant.**

   (B) **3263 Tanners Mill Road | Variance |** to allow for outside amplification of voice, music and/or instruments except during a wedding ceremony on a 37.28± acre tract located on the east side of Tanners Mill Road approximately 756 feet from its intersection with Weaver Road | Zoned AR-IV; Tax 15025 000002 **| Proposed use: agri-entertainment venue |** **Commission District 1 | **Paden M. Dunagan, applicant.**

3. (A) **4375 Peckerwood Road | Rezone |** from Residential-I-Low Density (R-I-L) to Agricultural Residential-III (AR-III) on a 5.21± acre tract located on the east side of Peckerwood Road approximately 1,720 feet from its intersection with Gillsville Highway | Zoned R-I-L; Tax Parcel 15003 000136 **| Proposed use: permitted uses in AR-III |** **Commission District 3 | **Carlos & Tara Gregory, applicants.**

   (B) **4375 Peckerwood Road | Use Subject to Planning Commission Approval |** on a 5.21± acre tract located on the east side of Peckerwood Road approximately 1,720 feet from its intersection with Gillsville Highway | Zoned R-I-L; Tax Parcel 15003 000136 **| Proposed use: residential business |** *Commission District 3 **| Carlos & Tara Gregory, applicants.**

   (C) **4375 Peckerwood Road | Variance |** from residential business conditions on a 5.21± acre tract located on the east side of Peckerwood Road approximately 1,720 feet from its intersection with Gillsville Highway | Zoned R-I-L; Tax Parcel 15003 000136 **| Proposed use: residential business |** *Commission District 3 **| Carlos & Tara Gregory, applicants.**

4. **4033 Hidden Hollow Drive | Rezone |** from Planned Residential Development (PRD) to Agricultural-Residential-III (AR-III) on a 4.36± acre tract located on the west side of Hidden Hollow Drive approximately 718 feet from its intersection with Hidden Hollow Terrace | Zoned PRD; Tax Parcel 10098 000125 **| Proposed use: permitted uses in AR-III |** ** Commission District 2 **| Bourdua REI, LLC/Brian Bourdua, applicant.**

5. **5800 Lanier Islands Parkway | Rezone |** from Planned Commercial Development (PCD) Conditional to Planned Commercial Development (PCD) to amend existing conditions on a 3.57± acre tract located on the south side of Lanier Islands Parkway at its intersection with Beards Road | Zoned PCD; Tax Parcel 07329 004012 **| Proposed use: vehicle sales and construction equipment rental & sales |** ** Commission District 2 **| Vacutek, LLC, applicant.**

6. **Deaton Creek Parkway | Change a Segment of a Road Name** | on the official Hall County road map from Deaton Creek Parkway to Deaton Way; being a ±0.096 mile section between Friendship Road and Thompsons Mill Road | ** Commission District 1 | **Hall County Public Works Staff, applicant.**

7. Public Hearing to Amend Title 17 of the Official Code of Hall County, Georgia, to comply with O.C.G.A. §§ 36-66-1 through 36-66-6, commonly known as the Zoning Procedures Law, as amended by the adoption of HB 1405; to repeal conflicting ordinances and resolutions; and for other purposes. ** | **Hall County Planning Staff, applicant.**
   - **Pending Documents**

*The Planning Commission's decision will be the final action taken unless appealed to the Board of Commissioners. To do so, file an application with the Planning Department within five working days of the Planning Commission's decision.

The Hall County Board of Commissioners will hear appeals at a public hearing Thursday, July 13, 2023 at 6:00 p.m. at the Hall County Government Center, 2nd Floor Meeting Room, 2875 Browns Bridge Road, Gainesville, Georgia.

**The Planning Commission's recommendation will be forwarded to the Board of Commissioners for final action at a public hearing on Thursday, July 13, 2023. The Board will meet at 6:00 p.m. at the Hall County Government Center, 2nd Floor Meeting Room, 2875 Browns Bridge Road, Gainesville, Georgia.

Thank you,
Ana Dominguez
Planning Commission Clerk
Hall County Community Development and Infrastructure

HALL COUNTY
GEORGIA

POST OFFICE DRAWER 1435
GAINESVILLE, GA 30503

t: 770.531.6800 | f: 770.531.3945

DIRECTOR
Srikanth Yamala

PUBLIC WORKS AND
UTILITIES DIRECTOR
Bill Nash, P.E.

Hall County Government

COMMUNITY DEVELOPMENT AND INFRASTRUCTURE
PUBLIC WORKS AND UTILITIES

M E M O R A N D U M

To: Randi Doveton, Director of Planning and Development

From: Bill Nash, Director of Public Works and Utilities

Date: May 18, 2023

Subject: June 5, 2023 - Hall County Planning Commission Agenda

Please be advised that our office has reviewed the Hall County Planning Commission agenda for the June 5, 2023 meeting. Upon review, we provide the following comments.

NEW BUSINESS

1. **3621 Reece Circle** | appeal an administrative decision for a hardship manufactured home, as it relates to §17.350.110 on a 1.01± acre tract located on the south side of Reece Circle at its intersection with A L Mangum Road | Zoned R-II; Tax Parcel 15014 000056A | **Proposed use: hardship mobile home** | * Commission District 3 | **Henry Whitlow, applicant.**

   a. **Engineering:** No Comment
   b. **Traffic:** No Comment
   c. **Utilities:** No Comment

2. (A) **3263 Tanners Mill Road | Use Subject to County Commission Approval |** on a 37.28± acre tract located on the east side of Tanners Mill Road approximately 756 feet from its intersection with Weaver Road | Zoned AR-IV; Tax 15025 000002 **| Proposed use: agri-entertainment venue |** **Commission District 1 | **Paden M. Dunagan, applicant.**

   a. **Engineering:** The site may require a stormwater management report should the site plan indicate the proposed development meets stormwater thresholds for impervious surfaces and/or disturbed acreage Show stream buffer and impervious setback from wrested vegetation not center line of stream
   Show stream buffer and impervious setback from wrested vegetation not center line of stream
   Proposed development is within 200' of state waters and will require a L.D.P.
   b. **Traffic:** No Comment
   c. **Utilities:** No Comment

3. (A) **4375 Peckerwood Road | Rezone |** from Residential-I-Low Density (R-I-L) to Agricultural Residential-III (AR-III) on a 5.21± acre tract located on the east side of Peckerwood Road approximately 1,720 feet from its intersection with Gillsville Highway | Zoned R-I-L; Tax Parcel 15003 000136 **| Proposed use: permitted uses in AR-III |** **Commission District 3 **| Carlos & Tara Gregory, applicants.**

a. **Engineering:** The site may require a stormwater management report should the site plan indicate the proposed development meets stormwater thresholds for impervious surfaces and/or disturbed acreage
b. **Traffic:** No comment
c. **Utilities:** Check with environment health if separate septic system will be required for food service.

4. **4033 Hidden Hollow Drive | Rezone |** from Planned Residential Development (PRD) to Agricultural-Residential-III (AR-III) on a 4.36± acre tract located on the west side of Hidden Hollow Drive approximately 718 feet from its intersection with Hidden Hollow Terrace | Zoned PRD; Tax Parcel 10098 000125 **| Proposed use: permitted uses in AR-III |** ** Commission District 2 | **Bourdua REI, LLC/Brian Bourdua, applicant.**

   a. **Engineering:** This property may have multiple streams and springheads as depilated on "plat for E.R.E. INC." any development on this property must show all stream buffers and flood zones.
   The site may require a stormwater management report should the site plan indicate the proposed development meets stormwater thresholds for impervious surfaces and/or disturbed acreage
   FEMA and Hall County studied Flood plains present on site.
   Show stream buffer and impervious setback from wrested vegetation not center line of stream
   b. **Traffic:** No Comment
   c. **Utilities:** Gainesville sewer district

5. **5800 Lanier Islands Parkway | Rezone |** from Planned Commercial Development (PCD) Conditional to Planned Commercial Development (PCD) to amend existing conditions on a 3.57± acre tract located on the south side of Lanier Islands Parkway at its intersection with Beards Road | Zoned PCD; Tax Parcel 07329 004012 **| Proposed use: vehicle sales and construction equipment rental & sales |** ** Commission District 2 **| Vacutek, LLC, applicant.**

   a. **Engineering:** The site may require a stormwater management report should the site plan indicate the proposed development meets stormwater thresholds for impervious surfaces and/or disturbed acreage Show stream buffer and impervious setback from wrested vegetation not center line of stream
   b. **Traffic:** GDOT permit required for access to Lanier Islands parkway.
   c. **Utilities:** City of Buford sewer district.

6. **Deaton Creek Parkway | Change a Segment of a Road Name |** on the official Hall County road map from Deaton Creek Parkway to Deaton Way; being a ±0.096 mile section between Friendship Road and Thompsons Mill Road | ** Commission District 1 | **Hall County Public Works Staff, applicant.**

   a. **Engineering:** No Comment
   b. **Traffic:** No Comment
   c. **Utilities:** No Comment.

Anael Dominguez (CDI: Planning)

From: John Hornick (Fire Services)
Sent: Tuesday, May 16, 2023 1:18 PM
To: Randi Doveton (CDI: Planning)
Cc: Anael Dominguez (CDI: Planning); Michael Vieira (Fire Services)
Subject: Fire Comments

Monday, June 5, 2023 Hall County Planning Commission Meeting.

1. (A) **3263 Tanners Mill Road | Use Subject to County Commission Approval |** on a 37.28± acre tract located on the east side of Tanners Mill Road approximately 756 feet from its intersection with Weaver Road | Zoned AR-IV; Tax 15025 000002 **| Proposed use: agri-entertainment venue |** **Commission District 1 | **Paden M. Dunagan, applicant.**

2. (B) **3263 Tanners Mill Road | Variance |** to allow for outside amplification of voice, music and/or instruments except during a wedding ceremony on a 37.28± acre tract located on the east side of Tanners Mill Road approximately 756 feet from its intersection with Weaver Road | Zoned AR-IV; Tax 15025 000002 **| Proposed use: agri-entertainment venue |** **Commission District 1 | **Paden M. Dunagan, applicant.**

   Hall County Fire Marshal's Comments:
   1) Site visit on 5/6/23 by the Hall County Fire Marshal's Office found a large commercial barn under construction that does not meet fire code as an event venue.
   2) The conceptual site plan is hand drawn and not to scale, the Hall County Fire Marshal's Office cannot comment on site plan as proposed. Note: The site work and proposed commercial barn are near completion.
   3) The conceptual building plans show the occupancy classification as a Group S-1 Storage Occupancy with an occupant load of 8 the project data does not match the scope of work summary for a timber framed commercial barn for events, the Hall County Fire Marshal's Office cannot comment on the building plan as proposed. Note: The commercial barn is near completion and does not match the conceptual building plans.
   4) The conceptual site and building plans do not meet fire code as proposed.
   5) Site and building plans will be required.

Regards,

John Hornick, NPQ Fire Service Plans Examiner 1
Lieutenant, Hall County Fire Rescue
Hall County Government
Main: 770-531-6838 | Cell: 404-597-0083
Website: www.Hallcounty.org

Print

Planning Commission Comments - June 5, 2023 - Submission #77548

Date Submitted: 6/5/2023

Comments completed in the form below will be submitted into the record for the June 5, 2023 meeting of the Hall County Planning Commission.

First Name*

Michelle

Last Name*

Jackson-Thacher

Address1*

3252 Cooper Bridge Rd

Address2

City*

Gainesville

State*

GA

Zip*

30507

Zoning Item for Comment*

2B. 3263 Tanners Mill Road | Variance

Select from the list below which zoning item you would like to register a comment on. Items are listed in the order in which they appear on the agenda.

Your Comments*

Dear Hall County Planning Commission,
I wanted to register my comments on the variance proposal for outdoor amplification of music. I have tried to look at this issue from both sides of the fence, residents and even Mr. Dunagan's perspective. I've driven the area several times as it's in a reasonable proximity to my own.
This variance should be denied as it would create an environment not beneficial to the residents of Tanners Mill Road and surrounding residences to this venue. I personally feel the disruptive nature isn't appropriate for an area that is the majority residential. And this wouldn't create a positive relationship between the Dunagan Hill Venue and the residents who live in these areas. Agri-entertainment venues are allowed to open and run a business inside of residential neighborhoods. Please bear in mind the Dunagan Hill Venue is within a residential area and deny the variance for the outdoor amplification of any kind.
Thank you for your attention and consideration,
Michelle Jackson-Thacher

Please write your comments in the box above.

File Upload

Choose File No file chosen

If you have files, such as photos, videos or text documents to include with your comments, upload them in the box above.

Would you like follow-up communication?

Please leave an email address and/or phone number if you would like a Hall County staff member to follow-up with you.

ZONING NOTICE

AN APPLICATION HAS BEEN FILED WITH HALL COUNTY IN REGARD TO THE ZONING REGULATIONS AS THEY APPLY TO THIS PROPERTY

APPLICANT: PADEN M. DUNAGAN

REQUEST: USE SUBJECT TO COUNTY COMMISSION APPROVAL FOR AN AGRI-ENTERTAINMENT VENUE WITH A VARIANCE.

PUBLIC HEARINGS WILL BE HELD ON:

PLANNING COMMISSION
Date: JUNE 5, 2023
Time: 5:15 PM

&

COUNTY COMMISSION
Date: JULY 13, 2023
Time: 6:00 PM

HALL COUNTY GOVERNMENT CENTER, 2875 BROWNS BRIDGE ROAD, GAINESVILLE, GA

FOR MORE INFORMATION CALL: (770) 531-6809

ZONING NOTICE

ZONING NOTICE
AN APPLICATION HAS BEEN FILED WITH HALL COUNTY IN REGARD TO THE ZONING REGULATIONS AS THEY APPLY TO THIS PROPERTY
APPLICANT: PADEN M DUNAGAN
REQUEST: USE SUBJECT TO COUNTY
Commission Approval For an Adult Entertainment Venue
PUBLIC HEARINGS WILL BE HELD ON WITH A VARIANCE
PLANNING COMMISSION
Date: JUNE 6, 2023
Time: 5:15 pm
&
BOARD OF COMMISSIONERS
Date: JULY 13 2023
Time: 6:00 pm
HALL COUNTY GOVERNMENT CENTER 2875 BROWN BRIDGE ROAD GAINESVILLE GA
FOR MORE INFORMATION CALL: (770) 531-6809

AGENDA ITEM

Public Hearing to amend Hall County's Zoning Map as follows:

REPORT TO: **Work Session (07/10/23)**

REPORT TO: **Voting Meeting (07/13/23)**

ITEM NO: 360/2023

SUBJECT: **5800 Lanier Islands Parkway | Rezone (Amend Conditions) |** from Planned Commercial Development (PCD) Conditional to Planned Commercial Development (PCD) to amend existing conditions on a 3.57± acre tract located on the south side of Lanier Islands Parkway at its intersection with Beards Road | Zoned PCD; Tax Parcel 07329 004012 **| Proposed use: vehicle sales and construction equipment rental & sales |** Commission District 2 **| Vacutek, LLC, applicant.**

Meetings:

Work Session Date: 07/10/23 **Voting Meeting Date:** 07/13/23

Executive Summary:

Presenter: RD
Recommendation:

Approval, with conditions:

1. Development is approved as generally shown on the concept plan and described in the revised project narrative dated June 2, 2023 modified as necessary for compliance with the conditions herein and development standards enforced at the time of site plan approval.

2. Any repair or replacement fencing along Lanier Islands Parkway shall be decorative metal with regular brick columns no less than every fifty (50) feet. Replacement of fencing along all other property lines shall be constructed of standard wood fencing materials or vinyl-coated chain link with privacy slat inserts at a minimum but may also match the decorative metal fencing, at the owner's discretion.

3. The fence must be properly maintained by the owner (1997).

4. Fencing shall be located 10 feet from the property line (1997).

5. The setback from Beards Road shall be 55 feet from the centerline of the right-of-way (1997).

6. Vehicle parking areas shall be paved with either asphalt or concrete (2004).

7. Any outdoor lighting on the premises shall be non-spill type (2004).

8. The applicable bulk and development standards in the Suburban Shopping district (S-S) shall apply.

9. The following uses shall be prohibited: junk yard; salvage yard; pick and pull; storage of debris; or inoperable vehicles.

10. While inoperable vehicles as an ongoing storage activity is prohibited, it is anticipated that rental equipment might be in need of repair or decommissioning and may be stored on the site from time to time. Limited storage of those items is permitted, provided the equipment is stored adjacent to the eastern interior side property line and is screened by an opaque fence a minimum of six (6) feet in height.

11. Plans for any further improvements or development of the property shall be submitted for review and appropriate permits obtained.

12. All conditions of zoning shall be made a part of any plat created for the property.

13. The applicant shall install a 10 foot planted strip inside or outside the existing fence, not on the right of way, parallel to Lake Lanier Islands Parkway and approved by the Planning Director prior to the issuance of a business license.

Purpose of Request:

5800 Lanier Islands Parkway | Rezone | from Planned Commercial Development (PCD) Conditional to Planned Commercial Development (PCD) to amend existing conditions on a 3.57± acre tract located on the south side of Lanier Islands Parkway at its intersection with Beards Road | Zoned PCD; Tax Parcel 07329 004012 | **Proposed use: vehicle sales and construction equipment rental & sales |** Commission District 2 | **Vacutek, LLC, applicant.**

History:

Facts and Issues:

Options:

Funding Requested	$ 0.00
Are funds within current budget?	No
Source of Funds	
Does the action involve a Resolution, Ordinance, Contract, Agreement, etc.?	No
Has it been reviewed by the County Attorney?	Yes
Is there a deadline for this item?	

Approvals:

Submit	Approve	Attorney	Administration
AD	RD	WLI	CR
Clerk			

Clerk
JR

Attachments:
Board Memo
Recommendation Report
Application
Updated Narrative
Narrative
Site Plan
Maps
Environmental Health Comments
GDOT Comments
Public Works Comments
Fire Comments
Notice Sign Photos

HALL COUNTY
GEORGIA

POST OFFICE DRAWER 1435

GAINESVILLE, GA 30503

t: 770.531.6809 | f: 770.531.3902

DIRECTOR
Srikanth Yamala

PLANNING AND DEVELOPMENT
DIRECTOR
Randi Doveton

Hall County Government

COMMUNITY DEVELOPMENT AND INFRASTRUCTURE
PLANNING AND DEVELOPMENT

To: Richard Higgins, Chairman
Kathy Cooper, District 1 Commissioner
Billy Powell, District 2 Commissioner
Gregg Poole, District 3 Commissioner
Jeff Stowe, District 4 Commissioner

From: Randi Doveton, Director of Planning & Development

Date: June 19, 2023

Subject: **5800 Lanier Islands Parkway | Rezone |** from Planned Commercial Development (PCD) Conditional to Planned Commercial Development (PCD) to amend existing conditions on a 3.57± acre tract **| Proposed use: vehicle sales and construction equipment rental & sales | Vacutek, LLC, applicant.**

The request before you is the request of Vacutek, LLC to amend the existing Planned Commercial Development (PCD) conditions to construction equipment rental & sales. The original request included vehicle sales but the applicant dropped that request prior to the Planning Commission meeting by submitting a revised narrative. This item is located within Commission District 2.

At their June 5, 2023 meeting, the Hall County Planning Commission voted to recommend approval with thirteen (13) conditions **(3-0, Sosebee & Varner absent)**.

There were **no public comments submitted** in advance of the Planning Commission meeting and **no one spoke during the public hearing.**

There have been no changes to the request since the Planning Commission took action.

Planning Commission Approval Conditions:

1. Development is approved as generally shown on the concept plan and described in the revised project narrative dated June 2, 2023 modified as necessary for compliance with the conditions herein and development standards enforced at the time of site plan approval.
2. Any repair or replacement fencing along Lanier Islands Parkway shall be decorative metal with regular brick columns no less than every fifty (50) feet. Replacement of fencing along all other property lines shall be constructed of standard wood fencing materials or vinyl-coated chain

link with privacy slat inserts at a minimum but may also match the decorative metal fencing, at the owner's discretion.

3. The fence must be properly maintained by the owner (1997).
4. Fencing shall be located 10 feet from the property line (1997).
5. The setback from Beards Road shall be 55 feet from the centerline of the right-of-way (1997).
6. Vehicle parking areas shall be paved with either asphalt or concrete (2004).
7. Any outdoor lighting on the premises shall be non-spill type (2004).
8. The applicable bulk and development standards in the Suburban Shopping district (S-S) shall apply.
9. The following uses shall be prohibited: junk yard; salvage yard; pick and pull; storage of debris; or inoperable vehicles.
10. While inoperable vehicles as an ongoing storage activity is prohibited, it is anticipated that rental equipment might be in need of repair or decommissioning and may be stored on the site from time to time. Limited storage of those items is permitted, provided the equipment is stored adjacent to the eastern interior side property line and is screened by an opaque fence a minimum of six (6) feet in height.
11. Plans for any further improvements or development of the property shall be submitted for review and appropriate permits obtained.
12. All conditions of zoning shall be made a part of any plat created for the property.
13. The applicant shall install a 10 foot planted strip inside or outside the existing fence, not on the right of way, parallel to Lake Lanier Islands Parkway and approved by the Planning Director prior to the issuance of a business license.

HALL COUNTY PLANNING COMMISSION
RECOMMENDATION REPORT

Applicant ..... Vacutek, LLC

Request ..... Rezone from Planned Commercial Development Conditional to Planned Commercial Development to amend existing conditions

Proposed Use ..... Vehicle sales and construction equipment rental & sales

Size ..... 3.57± acres

Zoning ..... Current PCD Conditional | Proposed PCD

Location ..... **5800 Lanier Islands Parkway** | Tax Parcel 07329 004012

Commission District ..... Two

Planning Commission Date ..... June 5, 2023

Staff Recommendation ..... Denial, as it does not meet the requirements of 17.380.060, particularly criteria 1 and 5; is inconsistent with the Comprehensive Plan future land use classification of Lake Supportive Corridor

Planning Commission Recommendation.....Approval, with conditions
Vote: 3-0 (Sosebee & Varner absent)

Planning Commission Conditions:

1. Development is approved as generally shown on the concept plan and described in the revised project narrative dated June 2, 2023 modified as necessary for compliance with the conditions herein and development standards enforced at the time of site plan approval.
2. Any repair or replacement fencing along Lanier Islands Parkway shall be decorative metal with regular brick columns no less than every fifty (50) feet. Replacement of fencing along all other property lines shall be constructed of standard wood fencing materials or vinyl-coated chain link with privacy slat inserts at a minimum but may also match the decorative metal fencing, at the owner's discretion.
3. The fence must be properly maintained by the owner (1997).
4. Fencing shall be located 10 feet from the property line (1997).
5. The setback from Beards Road shall be 55 feet from the centerline of the right-of-way (1997).
6. Vehicle parking areas shall be paved with either asphalt or concrete (2004).

7. Any outdoor lighting on the premises shall be non-spill type (2004).
8. The applicable bulk and development standards in the Suburban Shopping district (S-S) shall apply.
9. The following uses shall be prohibited: junk yard; salvage yard; pick and pull; storage of debris; or inoperable vehicles.
10. While inoperable vehicles as an ongoing storage activity is prohibited, it is anticipated that rental equipment might be in need of repair or decommissioning and may be stored on the site from time to time. Limited storage of those items is permitted, provided the equipment is stored adjacent to the eastern interior side property line and is screened by an opaque fence a minimum of six (6) feet in height.
11. Plans for any further improvements or development of the property shall be submitted for review and appropriate permits obtained.
12. All conditions of zoning shall be made a part of any plat created for the property.
13. The applicant shall install a 10 foot planted strip inside or outside the existing fence, not on the right of way, parallel to Lake Lanier Islands Parkway and approved by the Planning Director prior to the issuance of a business license.

Public Forum:

There were no comments in support or opposition.

Summary Analysis

The subject request is to rezone 3.57± acres from Planned Commercial Development (PCD) (17.180) to Planned Commercial Development (17.180) to amend conditions of the original PCD approval by altering the approved site plan to accommodate *vehicle sales* and *construction equipment rental & sales* uses.

The property exists with the structures identified on the site plan already constructed – a large metal building with five garage bays fronting Lanier Island Parkway; a metal canopy extending above the rooflines of the other buildings on the site; a second metal building surrounded with overhangs and four bays facing the adjacent property to the east, two gated access curb cuts, and a sidewalk along the Lanier Islands Parkway frontage; and a chain link fence around the remainder of the perimeter of the site. A portion of the western side of the lot is noted to be paved with gravel, but it is unclear based on aerial photography if that is accurate. The site plan indicates that all fencing is chain link, but review of aerial and street photography shows a decorative metal fence with regular brick columns along the full length of Lanier Islands Parkway.

Based on the submitted site plan, it appears the proposed development will not alter any of the vertical structures, but proposed to park equipment along the length of the site's two street frontages. Employee and customer parking will be located adjacent to the easternmost structure and property line. The narrative states the applicant's intent to use the site for outdoor display, sales, service, and storage to include construction equipment, boats, cars, and RVs. The narrative expressly specifies the site will not be used as a junk yard; salvage yard; pick and pull; debris storage; or inoperable vehicles.

The application proposes that the business operations will include 5-10 staff initially (with the acknowledgment that the number of staff may increase over time) and will operate 7 a.m. through 5 p.m. Monday through Friday as a dealer for sales and rental of hydro-excavation, combination trucks, jetting equipment, and street sweeper trucks, which will be stored outside. In addition, the business will provide sewer inspection cameras, locating equipment, and other smaller ancillary items supplying municipal and private contractors, which will be stored

indoors. The applicant indicated there is not a high likelihood of a need to store inoperable equipment or vehicles but noted that they would be stored in the rear of the shop or inside a building. Waste fluids are stored in above-ground containers pumped out by an environmental waste company, as needed.

The following development standards were proposed, some of which are unaddressed in the application materials based on the Planned Development (PCD, 17.180.080) standards:

1. The site plan shall indicate the proposed size, location and number of stories of each commercial structure. **The concept plan illustrates as-built conditions along with additional site characteristics proposed with the new use.**
2. The entrances, exits and number and location of all parking spaces shall be shown in detail, together with all loading and no parking zones. **These features are identified on the concept plan.**
3. The proposed methods and location of all buffers shall be described. **No buffers have been identified on the concept plan.**
4. The proposed exterior lighting shall be shown. **No exterior lighting is identified on the concept plan.**
5. All proposed signs, advertising or identification graphics shall be indicated, showing their number, size, height and location. **No signage has been identified on the concept plan.**
6. The type and number of uses proposed for the commercial development shall be indicated. **The proposed uses have been articulated in the project narrative.**
7. The development controls for the district shall be stated (lot coverage, setbacks, building heights, lot sizes, etc.). If standards are not specifically proposed, then the applicable standards in the suburban shopping district (S-S) shall apply. **There have not been any alternative bulk standards proposed as a function of the application.**
8. If residential uses are proposed in conjunction with the planned commercial development, then the applicable requirements of the planned residential development shall be provided. **There are no residential uses proposed in conjunction with this request.**

The following development standards are deficient or unaddressed in the application materials based on the Gateway Corridors Overlay District (GCOD, 17.420) standards:

- Requirements of 17.420.050
    - Building perimeter walls – the application does not propose any plantings
    - Street frontage – the required 10’ landscape strip has not been proposed along each street frontage
    - Screening of storage and accessory equipment – no screening of waste receptacles or outdoor storage vehicles for sale/rent has been proposed.
    - Outdoor lighting – the applicant did not submit any photometric plans or fixture specifications related to proposed outdoor lighting.

- Interparcel access – joint driveways are strongly encouraged, and the applicant has not proposed any access.
- Building materials – the metal buildings existing on the site do not meet the material requirements

All other standards are either proposed to be met or will be required to demonstrate compliance during the permitting process.

Based on the future land-use plan, staff finds the requested zoning designation *is not consistent* with the Hall County Comprehensive Plan. The Comprehensive Plan's future land use designation for the subject parcel is "Lake Area Residential." This land use category is characterized by low-density single-family residential and neighborhoods or "commercial uses that are boat related (boat sales, storage and equipment sales) or compliment recreational use of Lake Lanier (such as locally-owned restaurants." The intent of land use category is to preserve established neighborhoods and create opportunities for permanent and vacation residences or other commercial uses which support the recreational uses of the lake.

Zoning Analysis

When considering a zoning amendment to the zoning maps, the following items must be considered by Planning commission and the Hall County Commission pursuant to 17.380.060:

1. Whether the zoning proposal will permit a use that is suitable in view of the use and development of adjacent and nearby property; **The character of the structures is consistent with the adjacent commercial structures of the surrounding area; however, the uses themselves are distinct from the lake-supportive and residential uses found along the corridor.**
2. Whether the zoning proposal will adversely affect the existing use or usability of adjacent or nearby property; **No, it is not anticipated that the proposed use will adversely affect adjacent properties, but it is inconsistent with the vision established for the area.**
3. Whether the property to be affected by the zoning proposal has reasonable economic use as currently zoned. **It is unclear whether the property has reasonable economic use as currently zoned.**
4. Whether the zoning proposal will result in a use which will or could cause an excessive or burdensome use of existing streets, transportation facilities, or utilities; **Staff does not find that the proposed development will cause an excessive or burdensome use of existing streets, transportation facilities, or utilities.**
5. Whether the zoning proposal is in conformity with the policy and intent of the land use plan; **The proposed use is not consistent with the Comprehensive Plan and the "Lake Area Residential" land use designation. The Comprehensive Plan identifies "commercial uses that are boat related (boat sales, storage and equipment sales)" or uses that compliment recreational use of Lake Lanier "such as locally-owned restaurants" are envisioned for the Lake Area Residential designation.**
6. The extent to which property values are diminished by the existing zoning restrictions; **Absent a market study, staff is unable to determine whether property values are diminished by the existing zoning restrictions.**

7. The extent to which the destruction of the subject property's value under the existing zoning promotes the health, safety, morals or general welfare of the public; **Staff is unable to comment on the impact of property values without a full market analysis. Multiple factors impact property value including construction types, proposed uses, and maintenance.**

8. The relative gain to the public as compared to the hardship imposed upon the individual property owner; **Staff has not identified a hardship imposed on the property owner as the property is currently zoned.**

9. The length of time the property has been vacant as zoned considered in the context of land development in the area in the vicinity of the property; **A business license was issued in 2007 for a boat dealer/used boat sales (BUS-0026844). County records show this business license expired in December of 2019.**

10. Whether there are other existing or changing conditions affecting the use or development of the property which give supporting grounds for either approval or disapproval of the zoning proposal; **Staff is not aware of any changing conditions that affect the use and development of the property.**

11. Whether the change would create an isolated district unrelated to the surrounding districts; **The proposed zoning is a Planned Commercial Development (PCD, 17.180). Per the Official Code of Hall County, Planned Development Districts (17.180) are to be utilized as a "floating zone" which shall mean that areas will not be pre-designated as planned development districts but rather each such designation shall result from a specific and separate application for amendment. That being said, the proposed uses are different than those that are found on surrounding properties.**

12. Whether the present zoning district boundaries are illogically drawn in relation to existing conditions in the area; **There is no evidence that the present zoning district boundaries are illogically drawn.**

13. Whether the change requested is out of scale with the needs of the county as a whole or the immediate neighborhood; **In general, the use does not appear to be out of scale with the needs of the County as a whole.**

14. Whether it is impossible to find adequate sites for the proposed use in districts permitting such use and already appropriately zoned; **There are other properties within the County that support rental and sales of these vehicles based on the Future Land Use Map.**

15. Whether the need for rezoning could be handled instead by a variance request to the [Planning Commission]; **The request could not be handled alternatively as a variance.**

16. Whether there would be an ecological or pollution impact resulting from major modifications to the land if the request is granted; **Any land disturbance activities on the property shall be required to go through the land development permitting process and as a result are subject to local, state, and federal regulations. As a result, there should not be an ecological or pollution impact resulting from any modification to the land if the request is granted.**

17. Whether there is reasonable evidence based upon existing and anticipated land use that would indicate a mistake was made in the original zoning of the property; **There is no indication that a mistake was made in the original zoning.**

A Planned Commercial Development (PCD, 17.180.080) allows for more flexibility in the design and development of the property. This provides for a mixture of lake supportive commercial uses and encourages maximum use of natural features through proper site planning measures. The development should conform to

the existing character and development pattern of the surrounding area. **Based on the intended use and prior approvals, the requested use is not appropriate.**

17.380.050. - Submission requirements for a rezoning request

A. Any person or persons requesting a change in the official zoning map or use subject to approval of the county commission shall file an application with a plat or map of the property attached thereto, together with payment of such fees set forth in chapter 17.30 to cover administrative and advertising costs, in the planning department office. Such person or persons or their authorized agent shall appear in person at the public hearing held to consider the district change. **Proposal meets the requirement. Applicant has paid the appropriate fees and understands that someone must be present at both the Hall County Planning Commission meeting and the voting meeting of the Hall County Board of Commissioners.**

B. All applications for a change of zoning classification or use subject to approval of the county commission shall include:

1. A narrative statement identifying the existing and proposed use of the property and addressing each of the criteria set forth in section 17.380.060.C of this section [chapter]. **Proposal does provide a narrative outlining the intent of the change; however, the applicant has not prepared a response to each of the criteria listed in 17.380.060.C.**

2. A site plan drawn to scale designating the area covered by the application and identifying existing and proposed buildings and uses, adjacent existing land uses, zoning on contiguous parcels, including those across an abutting public right-of-way, and any other significant site improvements proposed to accommodate the proposed use or buffer adjacent uses, etc., or a plat of the subject property where no specific land use is proposed. In cases where only a plat or map is provided and no land use is proposed, the planning commission and county commission shall evaluate the application based on the most intense possible land use permitted in the proposed district**. Proposal does meet the requirement.**

C. For any application for a slow rate land treatment system (see chapter 17.20), the following additional requirements apply. **The proposed development falls within the City of Buford sewer district.**

D. For any application proposing the development of 100 or more residential dwelling units, a traffic impact study shall be submitted prior to consideration of the application by the planning commission. At the applicant's expense, the traffic impact study shall be prepared by a professional engineer in accordance with requirements established by the Hall County Engineering Department. The engineering department shall review the traffic impact study and forward any comments to the Hall County Planning Commission. **Proposal does not trigger this requirement.**

Development Support and Constraints

Hall County Environmental Health

In an email dated May 17, 2023, Emily McGahee stated “Must meet all Environmental Health commercial septic system permitting requirements. A detailed business plan must be submitted to Hall County Environmental Health for review.”

Hall County Fire Marshal

In an email dated May 16, 2023 John Hornick, NPQ Fire Inspector 1, Plans Review Lieutenant stated, “The Hall County Fire Marshal’s Office has no comments as proposed.”

Hall County Public Works and Utilities
In a memorandum from Public Works and Utilities dated May 18, 2023, Bill Nash, Director, stated the following:

Engineering:
The site may require a stormwater management report, should the site plan indicate the proposed development meets stormwater thresholds for impervious surfaces and/or disturbed acreage, Show stream buffer and impervious setback from wrested vegetation not center line of stream.

Traffic:
GDOT permit required for access to Lanier Islands parkway.

Utilities:
City of Buford sewer district.

Georgia Department of Transportation
In an email dated May 11, 2023, Jonathan Peevy, Assistant District Traffic Engineer, indicated coordination would be required.

- **Excerpts from the minutes of the June 5, 2023 meeting**

Applicant's Presentation:

Randi Doveton, Planning Director, presented a summary of the request.

Scott Angel, 1127 Reece Circle, Hoschton, presented the request. The applicant stated that they were not aware that they would need to rezone when they purchased the property.

Billy Holliday, 1972 Sutters Pond, Kennesaw, presented the request. The applicant stated that they currently have 50 employees.

Public Forum:

There were no comments in support or opposition.

Planning Commission Comments:

Mr. Braswell requested clarification that the applicants removed car sales from their narrative. Mr. Angel agreed.

Motion: A motion to approve, with conditions was made by Mr. Hunt and seconded by Ms. Pilcher. Vote: 3-0 (Sosebee & Varner absent)

Conditions:

1. Development is approved as generally shown on the concept plan and described in the revised project narrative dated June 2, 2023 modified as necessary for compliance with the conditions herein and development standards enforced at the time of site plan approval.
2. Any repair or replacement fencing along Lanier Islands Parkway shall be decorative metal with regular brick columns no less than every fifty (50) feet. Replacement of fencing along all other property lines shall be constructed of standard wood fencing materials or vinyl-coated chain link with privacy slat inserts at a minimum but may also match the decorative metal fencing, at the owner's discretion.
3. The fence must be properly maintained by the owner (1997).
4. Fencing shall be located 10 feet from the property line (1997).
5. The setback from Beards Road shall be 55 feet from the centerline of the right-of-way (1997).
6. Vehicle parking areas shall be paved with either asphalt or concrete (2004).
7. Any outdoor lighting on the premises shall be non-spill type (2004).
8. The applicable bulk and development standards in the Suburban Shopping district (S-S) shall apply.
9. The following uses shall be prohibited: junk yard; salvage yard; pick and pull; storage of debris; or inoperable vehicles.
10. While inoperable vehicles as an ongoing storage activity is prohibited, it is anticipated that rental equipment might be in need of repair or decommissioning and may be stored on the site from time to time. Limited storage of those items is permitted, provided the equipment is stored adjacent to the eastern interior side property line and is screened by an opaque fence a minimum of six (6) feet in height.
11. Plans for any further improvements or development of the property shall be submitted for review and appropriate permits obtained.
12. All conditions of zoning shall be made a part of any plat created for the property.
13. The applicant shall install a 10 foot planted strip inside or outside the existing fence, not on the right of way, parallel to Lake Lanier Islands Parkway and approved by the Planning Director prior to the issuance of a business license.

PLANNING AND DEVELOPMENT DEPARTMENT
2875 BROWNS BRIDGE ROAD, GAINESVILLE, GA, 30504
MAILING ADDRESS: PO BOX 1435, GAINESVILLE. GA 30503
t: 770-531-6809 I f: 770-531-3902

HALL COUNTY
GEORGIA
We have it all in Hall

ZONING APPLICATION

Applicant (Name & Mailing Address)

Vacutek, LLC

5800 Lanier Islands Parkway,

Buford, GA 30158

Phone 404-999-8372

Email Address bholliday@vacutek.com

Proposed Use Rental and Sales of Construction Equipment & VEHICLE SALES

Property Owner (Name & Mailing Address)

MarineMax East, Inc

2600 McCormick Drive, Suite 200

Clearwater, FL 33759

Phone 727-286-3991

rachel.bigge@marinemax.com

Contact Person (Name & Mailing Address)

Billy Holliday

4455 Contractors Court

Sugar Hill, GA 30158

Phone 601-209-4257

Email Address bholliday@vacutek.com

Status of Applicant

- ☐ Owner
- ☐ Option to Purchase
- ☐ Area Resident
- ☒ Other - Tenant

Requested Action

Existing Zoning: PCD

Rezone to: Amend Previous Conditions

Fee:$ 450.00

Receipt #:

Check #:

Tax Parcel Number 07329 004012

Acreage 3.58

Location Address 5800 Lake Lanier Islands Parkway Buford, GA 30518

I hereby certify that the above information and all attached information are true and correct.

Sign _____ Date: 3.28.2023

Applicant must complete all information above. Failure to complete this section will result in the refusal of the application. The Planning Department has 15 days to review all applications and will set the dates for each application. If the application is found insufficient, an agenda date will not be set until the required information is submitted. Please note that the Planning Commission and County Commission dates are tentative.

Application Withdrawal: I hereby **withdraw** the application.

Sign _____ Date: _____

Staff Use Only

Application Date: 4/17/23

Taken by: Katie M

Tentative Planning Commission Date: 6/15/23

Tentative County Commission Date: 7/13/2023

County Commission District: 2

PLANNING AND DEVELOPMENT DEPARTMENT
2875 BROWNS BRIDGE ROAD, GAINESVILLE, GA, 30504
MAILING ADDRESS: PO BOX 1435, GAINESVILLE. GA 30503
t: 770-531-6809 I f: 770-531-3902

HALL COUNTY
GEORGIA
We have it all in Hall

AUTHORIZATION OF PROPERTY OWNERS

Note: If the applicant is the property owner, please disregard this form.

Name of owner(s) MarineMax East, Inc

Address 2600 McCormick Drive, Suite 200
Clearwater, FL 33759

Phone Number 727-531-1700

Company Name Vacutek, LLC

Address 4455 Contractors Court
Sugar Hill, GA 30158

Phone Number 601.209.4257

I swear that I am the owner of the property which is the subject matter of the attached applications as shown in the records of Hall County, Georgia.

I authorize the person named above to act as applicant in the pursuit of a rezoning, permissive use, or variance of this property.

Signature of Owner(s)

Personally appeared before me
Samuel C. Lowrey

who swears that the information contained in this authorization is true and correct to the best of his/her knowledge and belief.

Notary Public

RACHEL BIGGE
Notary Public
State of Florida
Comm# HH212307
Expires 1/2/2026

3.28.2023
Date

PLANNING AND DEVELOPMENT DEPARTMENT
2875 BROWNS BRIDGE ROAD, GAINESVILLE, GA, 30504
MAILING ADDRESS: PO BOX 1435, GAINESVILLE. GA 30503
t: 770-531-6809 I f: 770-531-3902

HALL COUNTY
GEORGIA
We have it all in Hall

CAMPAIGN CONTRIBUTIONS DISCLOSURE FORM

This form must be completed by the applicant and property owner, or person representing the property owner, for all zoning actions.

OCGA § 36-67A-3[C] Disclosure of campaign contributions:

(b) When any applicant for zoning action has made, within two years immediately preceding the filing of the applicant's application for the zoning action, campaign contributions aggregating $250.00 or more to a local government official who will consider the application, it shall be the duty of the applicant to file a disclosure report with the governing authority of the respective local government showing:

(3) The name and official position of the local government official to whom the campaign contribution was made; and

(4) The dollar amount and description of each campaign contribution made by the applicant to the local government official during the two years immediately preceding the filing of the application for the rezoning action and the date of each such contribution.

(b) The disclosures required by subsection (a) of this Code section shall be filed within ten days after the application for the zoning action is first filed. (Code 1981, Section OCGA § 36-67A-3[C], enacted by GA L. 1986, page 1269, Section 1, GA L. 1991, page 1365, Section 1).

I hereby certify that I have read the above and that:

I have**____ I have not ✓

within the two years immediately preceding this date, made any contribution(s) aggregating $250.00 or more to any local government official involved in the review or consideration of this application.

**If you have made such contributions, you must provide the data required below within ten (10) days of filing this application.

Name of Official(s): _____ Office: _____

Dollar Amount: _____ Date of Contribution: _____

Applicant's/Owner's Signature: _____ **Date:** 3.28.2023

Applicant's/Owner's Name (Printed): ERIC V. YOUNG

Revised December 2019

PLANNING AND DEVELOPMENT DEPARTMENT
2875 BROWNS BRIDGE ROAD, GAINESVILLE, GA, 30504
MAILING ADDRESS: PO BOX 1435, GAINESVILLE, GA 30503
t: 770-531-6809 | f: 770-531-3902

HALL COUNTY
We have it all in Hall

CAMPAIGN CONTRIBUTIONS DISCLOSURE FORM

This form must be completed by the applicant and property owner, or person representing the property owner, for all zoning actions.

OCGA § 36-67A-3[C] Disclosure of campaign contributions:

(b) When any applicant for zoning action has made, within two years immediately preceding the filing of the applicant's application for the zoning action, campaign contributions aggregating $250.00 or more to a local government official who will consider the application, it shall be the duty of the applicant to file a disclosure report with the governing authority of the respective local government showing:

(3) The name and official position of the local government official to whom the campaign contribution was made; and

(4) The dollar amount and description of each campaign contribution made by the applicant to the local government official during the two years immediately preceding the filing of the application for the rezoning action and the date of each such contribution.

(b) The disclosures required by subsection (a) of this Code section shall be filed within ten days after the application for the zoning action is first filed. (Code 1981, Section OCGA § 36-67A-3[C], enacted by GA L. 1986, page 1269, Section 1, GA L. 1991, page 1365, Section 1).

I hereby certify that I have read the above and that:

I have**____ I have not X

within the two years immediately preceding this date, made any contribution(s) aggregating $250.00 or more to any local government official involved in the review or consideration of this application.

**If you have made such contributions, you must provide the data required below within ten (10) days of filing this application.

Name of Official(s): _____ Office: _____

Dollar Amount: _____ Date of Contribution: _____

Applicant's/Owner's Signature: _____ **Date:** 3.28.2023

Applicant's/Owner's Name (Printed): Samuel C. Lowrey

Katie L. Greenway (CDI: Planning)

From: Billy Holliday <bholliday@RentImpact.com>
Sent: Friday, June 2, 2023 1:49 PM
To: Katie L. Greenway (CDI: Planning)
Subject: Narrative

CAUTION: This email originated from outside of the organization. Do not click links or open attachments unless you recognize the sender and know the content is safe.

Katie,
Please take a look at the narrative below and confirm this is what you were requesting to give the board a preview and clarity of before the meeting Monday evening.

Thank you,

Billy Holliday
601-209-4257

Impact Rentals
Type of Business: Construction Equipment Rental Company – We rent and service various types of construction equipment.
Number of employees: 27
Operating hours: 7-5 Monday through Friday
Where will inoperable equipment be stored: At the rear of the yard behind the shop and inside the shop as it is made ready for rent or sold as we sell equipment before the end of its useful life to keep a reliable and safe equipment fleet that customers can trust.
Where are waste fluids stored: In above ground storage containers which are pumped out by an environmental waste company when full.
What will be stored outside: Various types of Construction equipment such as aerial lifts, light towers, rubber track excavators, etc.
What will be stored inside: Small, portable construction equipment on an extremely limited basis which is primarily new compact items for sale.
Proposed Use Narrative:
Proposed Use: For outdoor display, sales, service, and storage to include construction equipment. Not to include a junk yard, salvage yard, pick and pull, debris, or inoperable vehicles.

Proposed Use Narrative:

Proposed Use: For outdoor display, sales, service, and storage to include construction equipment, boats, cars, and RVs. Not to include a junk yard, salvage yard, pick and pull, debris, or inoperable vehicles.

Vacutek

Type of Business: Dealer for sales and rental of hydro excavation, Jetting, and street sweeper trucks. Vacutek also represents lines of sewer inspection cameras, locating equipment, and other smaller ancillary items supplying municipal and private contractors.

Number of employees: Initially 5 - 10

Operating hours: 7-5 Monday through Friday

Where will inoperable equipment be stored: At the rear of the yard behind the shop and inside the shop as it is made ready for rent or sold as we sell equipment before the end of its useful life to keep a reliable and safe equipment fleet that customers can trust. Many of the trucks for sale are ordered to specification and delivered upon arrival.

Where are waste fluids stored: In above ground storage containers which are pumped out by an environmental waste company when full.

What will be stored outside: Hydro excavation trucks, combination trucks, street sweepers, and other municipal equipment to serve county and city fleet needs.

What will be stored inside: Small, portable construction equipment on an extremely limited basis which is primarily new compact items for sale.

LEGEND: Employee / Customer Parking

Equipment Parking Area

NOTES:

THIS PROPERTY IS NOT LOCATED WITHIN A FLOOD HAZARD AREA AS PER FIRM FLOOD INSURANCE RATE MAP OF HALL COUNTY, GEORGIA COMMUNITY PANEL NO. 130486 0300E EFFECTIVE DATE: MARCH 21, 2000

EQUIPMENT USED FOR MEASUREMENT: TOPCON G.T.S. 303.

IN MY OPINION, THIS PLAT IS A CORRECT REPRESENTATION OF THE LAND PLATTED, & HAS BEEN PREPARED IN CONFORMITY WITH THE MINIMUM STANDARDS AND REQUIREMENTS OF LAW.

AREA: 3.58 ACRES
155,821 SQUARE FEET

ZONING AND SETBACKS:

CURRENT HALL COUNTY ZONING:
PLANNED COMMERCIAL DEVELOPMENT (PCD)
SETBACKS:
REFER TO HALL COUNTY CONDITIONS

REFERENCES:

1. STATE OF GEORGIA DEPARTMENT OF TRANSPORTATION RIGHT OF WAY PLANS FOR LAKE LANIER ACCESS ROAD (PROJ. # AHL-347 (7)) (P.I. # 170736)
2. PLAT PREPARED BY PATTON-PATTON INC. FOR WHITMORE ENTERPRISES, INC. DATED 11-10-95, REVISED 7-30-96, 1.66 ACRES.
3. PLAT PREPARED BY PATTON-PATTON INC. FOR SUNTRUST BANK OF NORTHEAST GA., NA, DATED 11-10-95, 0.90 ACRES.
4. PLAT PREPARED BY PATTON-PATTON INC. FOR SUNTRUST BANK OF NORTHEAST GA., NA, DATED 11-10-95, 1.02 ACRES.
5. PLAT PREPARED BY PATTON-BOYER, INC. FOR PHILLIP J. MARKERT, DATED 3-31-95, REVISED 5-5-03, 8.06 ACRES.
6. PLAT SLIDE 429, PAGE 130A
7. DEED BOOK 4139, PAGES 291-293
8. DEED BOOK 2359, PAGE 130.
9. DEED BOOK 3392, PAGES 250-251.

THE FIELD DATA UPON WHICH THIS PLAT IS BASED HAS A CLOSURE PRECISION OF ONE FOOT IN 64,086 FEET AND AN ANGULAR ERROR OF 00°00'05" PER ANGLE POINT, AND WAS ADJUSTED USING LEAST SQUARES RULE. PARTY: W.W. C.M.

THIS SURVEY WAS NOT PREPARED FROM THE AID OF A TITLE SEARCH AND IS SUBJECT TO ANY RESTRICTIONS OR EASEMENTS THAT MIGHT BE RECORDED.

THIS PLAT OR SURVEY IS FOR THE EXCLUSIVE USE OF THE PARTY OR PARTIES LISTED UNDER THE CAPTION "SURVEY FOR:". ANY THIRD PARTY USE TO BE AT THEIR OWN RISK.

THIS PLAT HAS BEEN CALCULATED FOR CLOSURE AND WAS FOUND TO BE ACCURATE WITHIN ONE FOOT IN 181,151 FEET.

LEGEND:

D.I.P.	DUCTILE IRON PIPE	I.P.F.	IRON PIN FOUND
PVC	POLYVINYL CHLORIDE PIPE	C.T.F.	CRIMPED TOP PIN FOUND
P.P.	POWER POLE	R.B.F.	REBAR PIN FOUND
S.P.	SERVICE POLE	R.B.S.	REBAR PIN SET
T.P.	TELEPHONE POLE	O.T.F.	OPEN TOP FOUND
P.B.	POWER TRANSFORMER BOX	A.I.F.	ANGLE IRON FOUND
T.R.	TELEPHONE RISER	C.M.F.	CONCRETE MONUMENT FOUND
E	ELECTRICAL LINE	P/L	PROPERTY LINE
T	TELEPHONE CABLE	R/W	RIGHT OF WAY
G	GAS MAIN	N/F	NOW OR FORMERLY
C.M.P.	CORRUGATED METAL PIPE	C/L	CENTER LINE
R.C.P.	REINFORCED CONCRETE PIPE	L.L.L.	LAND LOT LINE
C.B.	CATCH BASIN	F.H.	FIRE HYDRANT
J.B.	JUNCTION BOX	G.V.	GATE VALVE
M.H.	STORM DRAIN MANHOLE	W.M.	WATER METER
D.I.	DROP INLET	W	WATER MAIN
B.C.	BACK OF CURB	I.C.V.	IRRIGATION CONTROL VALVE

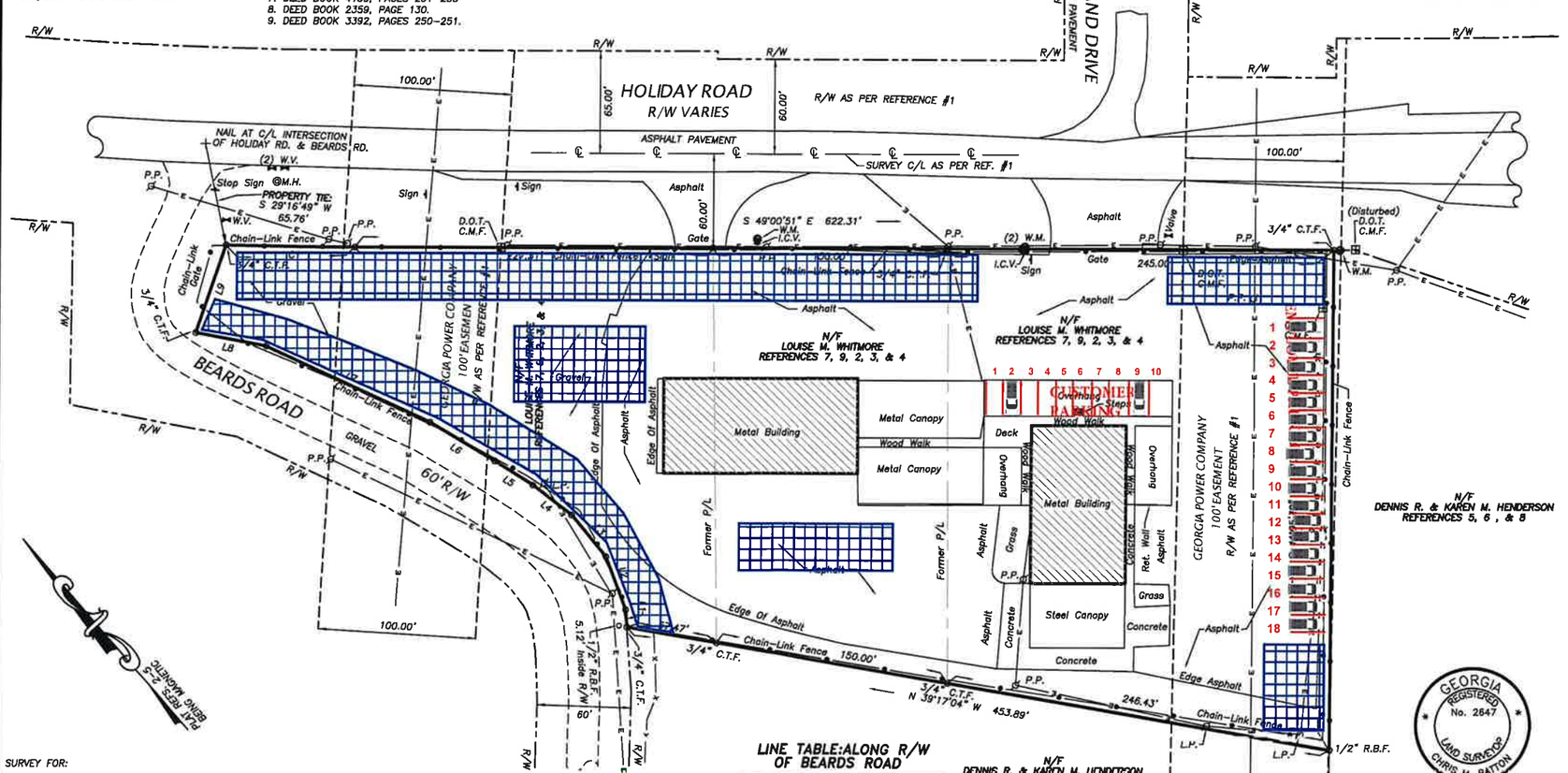

LINE TABLE: ALONG R/W OF BEARDS ROAD

LINE	BEARING	DISTANCE
L1	N 36°37'54" E	11.02'
L2	N 20°18'26" E	35.99'
L3	N 01°02'42" E	34.60'
L4	N 11°33'44" W	31.10'
L5	N 16°57'49" W	28.68'
L6	N 18°19'04" W	48.04'
L7	N 24°17'21" W	114.94'
L8	N 38°10'58" W	45.58'
L9	N 59°45'39" E	58.75'

CURVE TABLE:

CURVE	RADIUS	ARC LENGTH	CHORD LENGTH	CHORD BEARING	DELTA ANGLE
C1	2998.25'	81.99'	81.99'	S 48°13'46" E	01°34'01"

SURVEY FOR:
MARINEMAX OF GEORGIA, INC.

LOCATED IN:
LAND LOT 329, 7th LAND DISTRICT
HALL COUNTY, GEORGIA
SCALE: 1" = 50'

ORIGINAL PLAT DATE: 11 - 10 - 1995
REVISED PLAT DATE: 07 - 30 - 1996 (IMPROVEMENTS)
REVISED SURVEY DATE: 11 - 11 - 2003
REVISED PLAT DATE: 11 - 19 - 2003 (IMPROVEMENTS & COMBINE 3 TRACTS)

50 0 100 150
150'-0"
GRAPHIC SCALE - FEET

GEORGIA REGISTERED No. 2647 LAND SURVEYOR CHRIS M. PATTON
County Surveyor
Hall County, Georgia

Patton - Boyer, Inc.
LAND SURVEYORS & CIVIL ENGINEERS
909 ATLANTA HIGHWAY
GAINESVILLE, GEORGIA 30501
1(877) 807 - 2481
PHONE (770) 532 - 6492
FAX (770) 532 - 1995

P.M.: C.W.C. J.N.: 94-676.02 (D-5)

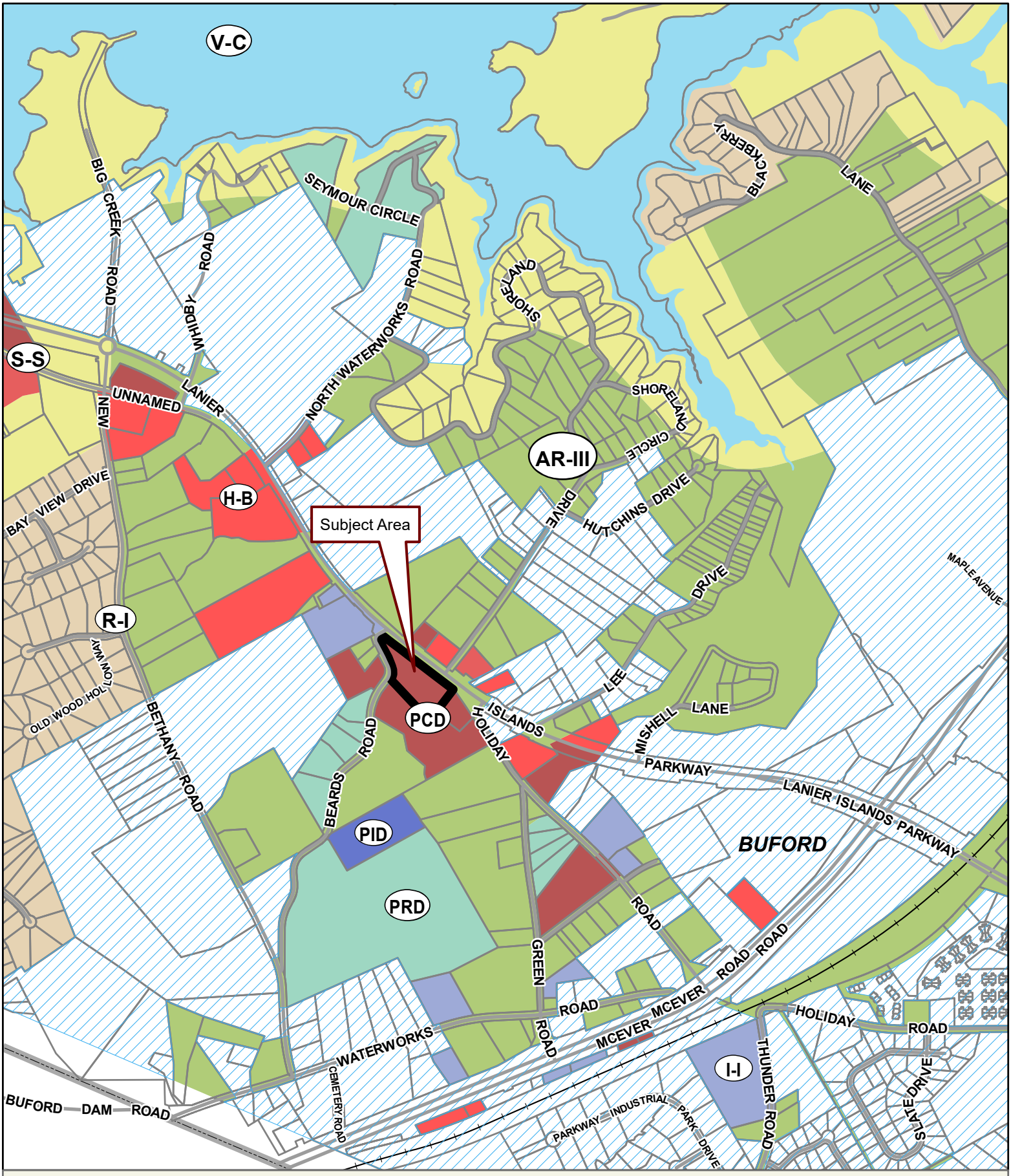

Applicant: VACUTEK, LLC
Tax Parcel #: 07329 004012
Location: 5800 LANIER ISLANDS PARKWAY, BUFORD, GA 30518
Commission District 2 **PC Mtg. Date:** 06/05/2023

0 300 600 1,200
Feet

Zoning Boundary
City Limits
Subject Area
Structure

N

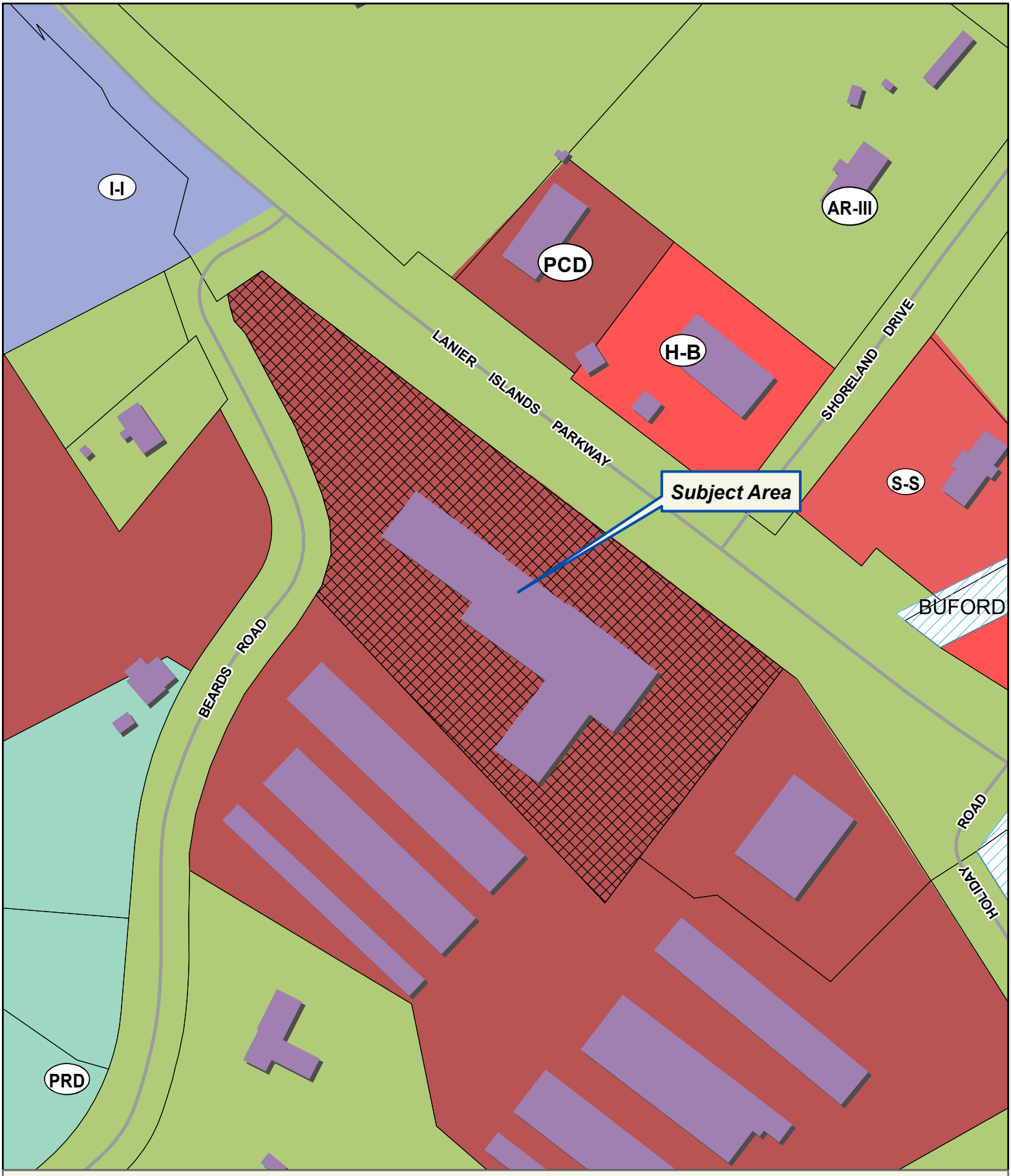

Applicant: VACUTEK, LLC
Tax Parcel #: 07329 004012
Location: 5800 LANIER ISLANDS PARKWAY, BUFORD, GA 30518
Commission District 2 **PC Mtg. Date:** 06/05/2023

0 25 50 100
Feet

Zoning Boundary
City Limits
Subject Area
Structure

N

Applicant: VACUTEK, LLC
Tax Parcel #: 07329 004012
Location: 5800 LANIER ISLANDS PARKWAY, BUFORD, GA 30518
Commission District 2 **PC Mtg. Date:** 06/05/2023

0 50 100 200
Feet

Zoning Boundary
City Limits
Subject Area

N

Anael Dominguez (CDI: Planning)

From: Emily McGahee (Environmental Health)
Sent: Wednesday, May 17, 2023 12:41 PM
To: Anael Dominguez (CDI: Planning); Randi Doveton (CDI: Planning)
Cc: Kelly Hairston (Environmental Health); Chad Harper (Environmental Health)
Subject: HCPC Tentative Agenda 6.5.23

Please find Environmental Health comments below:

Item 1, 3621 Reece Circle, Whitlow: Must meet all Environmental Health residential septic system permitting requirements.

Items 2A/B, 3263 Tanners Mill Road, Dunagan: A detailed business plan must be submitted to Hall County Environmental Health for review. Additional items septic system modification/expansion may be required after review of business plan. Tourist Accommodation permit/plan review and/or Food Service permit/plan review may be required after review of business plan.

Items 3A/B/C, 4375 Peckerwood Road, Gregory: A detailed business plan must be submitted to Hall County Environmental Health for review. Additional items septic system modification/expansion may be required after review of business plan. Food Service permit/plan will be required.

Item 4, 4033 Hidden Hollow Drive: Must meet all Environmental Health residential septic system permitting requirements. A copy of recorded plat showing property in current configuration must be submitted at time of permit application.

Item 5, 5800 Lanier Islands Pkwy: Must meet all Environmental Health commercial septic system permitting requirements. A detailed business plan must be submitted to Hall County Environmental Health for review.

Item 6, Deaton Creek Pkwy, Public Works: No comment

Item 7, Code Amendment: No comment

Emily McGahee
Hall County Environmental Health
Hall County Government Center
2875 Browns Bridge Road
Mailing: PO Box 5901
Gainesville, GA 30504
(770) 531-3973
(770) 531-6767 (fax)

http://dph.georgia.gov/environmental-health (State Website)
http://www.phdistrict2.org/HallCounty.htm (District Website)
http://www.hallcounty.org/devserv/environmental.asp (County Website & Forms)

Anael Dominguez (CDI: Planning)

From: Peevy, Jonathan <jpeevy@dot.ga.gov>
Sent: Thursday, May 11, 2023 4:33 PM
To: Anael Dominguez (CDI: Planning)
Cc: Niebauer, Parker J
Subject: RE: Tentative Planning Agenda for June 5, 20223

CAUTION: This email originated from outside of the organization. Do not click links or open attachments unless you recognize the sender and know the content is safe.

Anael,
The following will require GDOT coordination.

- 3263 Tanners Mill Road
- 5800 Lanier Islands Parkway

Thank you,

Jonathan Peevy, P.E.
Assistant District Traffic Engineer

Georgia Department of Transportation

District 1 Traffic Operations
1475 Jesse Jewell Pkwy
Suite 100
Gainesville, GA, 30501
770.533.8276 office

From: Anael Dominguez (CDI: Planning) <adominguez@hallcounty.org>
Sent: Thursday, May 11, 2023 2:27 PM
Subject: Tentative Planning Agenda for June 5, 20223

Good afternoon –

Here is the Tentative Agenda and Maps for the **Monday, June 5, 2023** Hall County Planning Commission Meeting.

Please use the links to review the documents and respond with comments to Hall County Planning and Development. Failure to provide comments in a timely manner may result in the information not being included in the staff report.

When submitting comments, please include the name of the applicant along with the address of the property with the corresponding comment.

Comments are due by **Thursday, May 18th.** Email comments to Randi (rdoveton@hallcounty.org) and Ana (adominguez@hallcounty.org).

CALL TO ORDER

AGENDA REVIEW

APPROVAL OF MINUTES – May 15, 2023

NEW BUSINESS

1. **3621 Reece Circle** | appeal an administrative decision for a hardship manufactured home, as it relates to §17.350.110 on a 1.01± acre tract located on the south side of Reece Circle at its intersection with A L Mangum Road | Zoned R-II; Tax Parcel 15014 000056A | **Proposed use: hardship mobile home** | * Commission District 3 | **Henry Whitlow, applicant.**

2. (A) **3263 Tanners Mill Road | Use Subject to County Commission Approval |** on a 37.28± acre tract located on the east side of Tanners Mill Road approximately 756 feet from its intersection with Weaver Road | Zoned AR-IV; Tax 15025 000002 **| Proposed use: agri-entertainment venue |** **Commission District 1 | **Paden M. Dunagan, applicant.**

   (B) **3263 Tanners Mill Road | Variance |** to allow for outside amplification of voice, music and/or instruments except during a wedding ceremony on a 37.28± acre tract located on the east side of Tanners Mill Road approximately 756 feet from its intersection with Weaver Road | Zoned AR-IV; Tax 15025 000002 **| Proposed use: agri-entertainment venue |** **Commission District 1 | **Paden M. Dunagan, applicant.**

3. (A) **4375 Peckerwood Road | Rezone |** from Residential-I-Low Density (R-I-L) to Agricultural Residential-III (AR-III) on a 5.21± acre tract located on the east side of Peckerwood Road approximately 1,720 feet from its intersection with Gillsville Highway | Zoned R-I-L; Tax Parcel 15003 000136 **| Proposed use: permitted uses in AR-III |** **Commission District 3 | **Carlos & Tara Gregory, applicants.**

   (B) **4375 Peckerwood Road | Use Subject to Planning Commission Approval |** on a 5.21± acre tract located on the east side of Peckerwood Road approximately 1,720 feet from its intersection with Gillsville Highway | Zoned R-I-L; Tax Parcel 15003 000136 **| Proposed use: residential business |** *Commission District 3 **| Carlos & Tara Gregory, applicants.**

   (C) **4375 Peckerwood Road | Variance |** from residential business conditions on a 5.21± acre tract located on the east side of Peckerwood Road approximately 1,720 feet from its intersection with Gillsville Highway | Zoned R-I-L; Tax Parcel 15003 000136 **| Proposed use: residential business |** *Commission District 3 **| Carlos & Tara Gregory, applicants.**

4. **4033 Hidden Hollow Drive | Rezone |** from Planned Residential Development (PRD) to Agricultural-Residential-III (AR-III) on a 4.36± acre tract located on the west side of Hidden Hollow Drive approximately 718 feet from its intersection with Hidden Hollow Terrace | Zoned PRD; Tax Parcel 10098 000125 **| Proposed use: permitted uses in AR-III |** ** Commission District 2 **| Bourdua REI, LLC/Brian Bourdua, applicant.**

5. **5800 Lanier Islands Parkway | Rezone |** from Planned Commercial Development (PCD) Conditional to Planned Commercial Development (PCD) to amend existing conditions on a 3.57± acre tract located on the south side of Lanier Islands Parkway at its intersection with Beards Road | Zoned PCD; Tax Parcel 07329 004012 **| Proposed use: vehicle sales and construction equipment rental & sales |** ** Commission District 2 **| Vacutek, LLC, applicant.**

6. **Deaton Creek Parkway | Change a Segment of a Road Name** | on the official Hall County road map from Deaton Creek Parkway to Deaton Way; being a ±0.096 mile section between Friendship Road and Thompsons Mill Road | ** Commission District 1 | **Hall County Public Works Staff, applicant.**

7. Public Hearing to Amend Title 17 of the Official Code of Hall County, Georgia, to comply with O.C.G.A. §§ 36-66-1 through 36-66-6, commonly known as the Zoning Procedures Law, as amended by the adoption of HB 1405; to repeal conflicting ordinances and resolutions; and for other purposes. ** | **Hall County Planning Staff, applicant.**
   - **Pending Documents**

*The Planning Commission's decision will be the final action taken unless appealed to the Board of Commissioners. To do so, file an application with the Planning Department within five working days of the Planning Commission's decision.

The Hall County Board of Commissioners will hear appeals at a public hearing Thursday, July 13, 2023 at 6:00 p.m. at the Hall County Government Center, 2nd Floor Meeting Room, 2875 Browns Bridge Road, Gainesville, Georgia.

**The Planning Commission's recommendation will be forwarded to the Board of Commissioners for final action at a public hearing on Thursday, July 13, 2023. The Board will meet at 6:00 p.m. at the Hall County Government Center, 2nd Floor Meeting Room, 2875 Browns Bridge Road, Gainesville, Georgia.

Thank you,
Ana Dominguez
Planning Commission Clerk
Hall County Community Development and Infrastructure

HALL COUNTY
GEORGIA

POST OFFICE DRAWER 1435
GAINESVILLE, GA 30503

t: 770.531.6800 | f: 770.531.3945

DIRECTOR
Srikanth Yamala

PUBLIC WORKS AND
UTILITIES DIRECTOR
Bill Nash, P.E.

Hall County Government

COMMUNITY DEVELOPMENT AND INFRASTRUCTURE
PUBLIC WORKS AND UTILITIES

M E M O R A N D U M

To: Randi Doveton, Director of Planning and Development

From: Bill Nash, Director of Public Works and Utilities

Date: May 18, 2023

Subject: June 5, 2023 - Hall County Planning Commission Agenda

Please be advised that our office has reviewed the Hall County Planning Commission agenda for the June 5, 2023 meeting. Upon review, we provide the following comments.

NEW BUSINESS

1. **3621 Reece Circle** | appeal an administrative decision for a hardship manufactured home, as it relates to §17.350.110 on a 1.01± acre tract located on the south side of Reece Circle at its intersection with A L Mangum Road | Zoned R-II; Tax Parcel 15014 000056A | **Proposed use: hardship mobile home** | * Commission District 3 | **Henry Whitlow, applicant.**

   a. **Engineering:** No Comment
   b. **Traffic:** No Comment
   c. **Utilities:** No Comment

2. (A) **3263 Tanners Mill Road | Use Subject to County Commission Approval |** on a 37.28± acre tract located on the east side of Tanners Mill Road approximately 756 feet from its intersection with Weaver Road | Zoned AR-IV; Tax 15025 000002 **| Proposed use: agri-entertainment venue |** **Commission District 1 | **Paden M. Dunagan, applicant.**

   a. **Engineering:** The site may require a stormwater management report should the site plan indicate the proposed development meets stormwater thresholds for impervious surfaces and/or disturbed acreage Show stream buffer and impervious setback from wrested vegetation not center line of stream
   Show stream buffer and impervious setback from wrested vegetation not center line of stream
   Proposed development is within 200' of state waters and will require a L.D.P.
   b. **Traffic:** No Comment
   c. **Utilities:** No Comment

3. (A) **4375 Peckerwood Road | Rezone |** from Residential-I-Low Density (R-I-L) to Agricultural Residential-III (AR-III) on a 5.21± acre tract located on the east side of Peckerwood Road approximately 1,720 feet from its intersection with Gillsville Highway | Zoned R-I-L; Tax Parcel 15003 000136 **| Proposed use: permitted uses in AR-III |** **Commission District 3 **| Carlos & Tara Gregory, applicants.**

a. **Engineering:** The site may require a stormwater management report should the site plan indicate the proposed development meets stormwater thresholds for impervious surfaces and/or disturbed acreage
b. **Traffic:** No comment
c. **Utilities:** Check with environment health if separate septic system will be required for food service.

4. **4033 Hidden Hollow Drive | Rezone |** from Planned Residential Development (PRD) to Agricultural-Residential-III (AR-III) on a 4.36± acre tract located on the west side of Hidden Hollow Drive approximately 718 feet from its intersection with Hidden Hollow Terrace | Zoned PRD; Tax Parcel 10098 000125 **| Proposed use: permitted uses in AR-III |** ** Commission District 2 | **Bourdua REI, LLC/Brian Bourdua, applicant.**

   a. **Engineering:** This property may have multiple streams and springheads as depilated on "plat for E.R.E. INC." any development on this property must show all stream buffers and flood zones.
   The site may require a stormwater management report should the site plan indicate the proposed development meets stormwater thresholds for impervious surfaces and/or disturbed acreage
   FEMA and Hall County studied Flood plains present on site.
   Show stream buffer and impervious setback from wrested vegetation not center line of stream
   b. **Traffic:** No Comment
   c. **Utilities:** Gainesville sewer district

5. **5800 Lanier Islands Parkway | Rezone |** from Planned Commercial Development (PCD) Conditional to Planned Commercial Development (PCD) to amend existing conditions on a 3.57± acre tract located on the south side of Lanier Islands Parkway at its intersection with Beards Road | Zoned PCD; Tax Parcel 07329 004012 **| Proposed use: vehicle sales and construction equipment rental & sales |** ** Commission District 2 **| Vacutek, LLC, applicant.**

   a. **Engineering:** The site may require a stormwater management report should the site plan indicate the proposed development meets stormwater thresholds for impervious surfaces and/or disturbed acreage Show stream buffer and impervious setback from wrested vegetation not center line of stream
   b. **Traffic:** GDOT permit required for access to Lanier Islands parkway.
   c. **Utilities:** City of Buford sewer district.

6. **Deaton Creek Parkway | Change a Segment of a Road Name |** on the official Hall County road map from Deaton Creek Parkway to Deaton Way; being a ±0.096 mile section between Friendship Road and Thompsons Mill Road | ** Commission District 1 | **Hall County Public Works Staff, applicant.**

   a. **Engineering:** No Comment
   b. **Traffic:** No Comment
   c. **Utilities:** No Comment.

Anael Dominguez (CDI: Planning)

From: John Hornick (Fire Services)
Sent: Tuesday, May 16, 2023 3:53 PM
To: Anael Dominguez (CDI: Planning)
Cc: Randi Doveton (CDI: Planning)
Subject: Fire Comment

Monday, June 5, 2023 Hall County Planning Commission Meeting.

1. **5800 Lanier Islands Parkway | Rezone |** from Planned Commercial Development (PCD) Conditional to Planned Commercial Development (PCD) to amend existing conditions on a 3.57± acre tract located on the south side of Lanier Islands Parkway at its intersection with Beards Road | Zoned PCD; Tax Parcel 07329 004012 **| Proposed use: vehicle sales and construction equipment rental & sales |** ** Commission District 2 **| Vacutek, LLC, applicant.**
   The Hall County Fire Marshal's Office has no comments as proposed.

Regards,

John Hornick, NPQ Fire Service Plans Examiner 1
Lieutenant, Hall County Fire Rescue
Hall County Government
Main: 770-531-6838 | Cell: 404-597-0083
Website: www.Hallcounty.org

ZONING NOTICE
AN APPLICATION HAS BEEN FILED WITH HALL COUNTY IN REGARD TO THE ZONING REGULATIONS AS THEY APPLY TO THIS PROPERTY
APPLICANT: VACUTEK, LLC
REQUEST: Amend conditions of a PCD to allow for Vehicle sales and construction equipment rentals + Sales
PUBLIC HEARINGS WILL BE HELD ON:
PLANNING COMMISSION
Date: June 5 2023
Time: 5:15 pm
&
COUNTY COMMISSION
Date: July 13 2023
Time: 6:00 pm
HALL COUNTY GOVERNMENT CENTER 2875 BRENAU BRIDGE ROAD, GAINESVILLE, GA
FOR MORE INFORMATION CALL: (770) 531-6809
Holiday Rd

ZONING NOTICE

AGENDA ITEM

Public Hearing to amend Hall County's Zoning Map as follows:

REPORT TO: **Work Session (07/10/23)**

REPORT TO: **Voting Meeting (07/13/23)**

ITEM NO: 359/2023

SUBJECT: **4033 Hidden Hollow Drive | Rezone |** from Planned Residential Development (PRD) to Agricultural-Residential-III (AR-III) on a 4.36± acre tract located on the west side of Hidden Hollow Drive approximately 718 feet from its intersection with Hidden Hollow Terrace | Zoned PRD; Tax Parcel 10098 000125 **| Proposed use: permitted uses in AR-III |** Commission District 2 **| Bourdua REI, LLC/Brian Bourdua, applicant.**

Meetings:

Work Session Date: 07/10/23 **Voting Meeting Date:** 07/13/23

Executive Summary:

Presenter: RD

Recommendation:

Approval, with conditions:

1. Development of the subject parcel shall be limited to one (1) site-built single family residence developed with similar materials and colors as surrounding dwelling units established within the existing development. Final elevations shall be subject to the approval of the Planning Director.

2. The Applicant/Developer shall satisfy all comments from Environmental Health Department, Hall County Fire Marshal, Public Works and Utilities, and Georgia Department of Transportation prior to obtaining a certificate of occupancy.

3. The following statement regarding the potential impacts of agricultural operations in the area shall be made a part of any plat recorded on the property: "Owners, occupants, and users of property shown on this plat are hereby informed of the impacts associated with normal farming practices which may take place on adjacent and nearby property including, but not limited to, noise, odors, dust, the operation of machinery of any kind, the storage and disposal of manure, and the application of fertilizers, herbicides, and pesticides. Therefore, owners, occupants, and users of the property shown on this plat should be prepared to expect the effects of such practices."

4. All conditions of zoning shall be recorded on the final plat.

5. The only allowable uses are the ones allowed in R-I zoning.

Purpose of Request: **History:**

4033 Hidden Hollow Drive | Rezone | from Planned Residential Development (PRD) to Agricultural-Residential-III (AR-III) on a 4.36± acre tract located on the west side of Hidden Hollow Drive approximately 718 feet from its intersection with Hidden Hollow Terrace | Zoned PRD; Tax Parcel 10098 000125 | **Proposed use: permitted uses in AR-III |** Commission District 2 **| Bourdua REI, LLC/Brian Bourdua, applicant.**

Facts and Issues: **Options:**

Funding Requested	$ 0.00
Are funds within current budget?	No
Source of Funds	
Does the action involve a Resolution, Ordinance, Contract, Agreement, etc.?	No
Has it been reviewed by the County Attorney?	Yes
Is there a deadline for this item?	

Approvals:

Submit	Approve	Attorney	Administration
AD	RD	WLI	CR
Clerk			
JR			

Attachments:

Board Memo
Recommendation Report
Application
Narrative
Site Plan
Maps
Renderings
Deed
Environmental Health Comments
GDOT Comments
Public Works Comments
Fire Comments
Notice Sign Photos

HALL COUNTY
GEORGIA

POST OFFICE DRAWER 1435
GAINESVILLE, GA 30503

t: 770.531.6809 | f: 770.531.3902

DIRECTOR
Srikanth Yamala

PLANNING AND DEVELOPMENT
DIRECTOR
Randi Doveton

Hall County Government

COMMUNITY DEVELOPMENT AND INFRASTRUCTURE
PLANNING AND DEVELOPMENT

To: Richard Higgins, Chairman
Kathy Cooper, District 1 Commissioner
Billy Powell, District 2 Commissioner
Gregg Poole, District 3 Commissioner
Jeff Stowe, District 4 Commissioner

From: Randi Doveton, Director of Planning & Development

Date: June 19, 2023

Subject: **4033 Hidden Hollow Drive | Rezone |** from Planned Residential Development (PRD) to Agricultural-Residential-III (AR-III) on a 4.36± acre tract **| Proposed use: permitted uses in AR-III | Bourdua REI, LLC/Brian Bourdua, applicant.**

The request before you is the request of Bourdua REI, LLC/Brian Bourdua to rezone from Planned Residential Development (PRD) to Agricultural-Residential-III (AR-III) to allow permitted uses in AR-III. This item is located within Commission District 2.

At their June 5, 2023 meeting, the Hall County Planning Commission voted to recommend approval with five (5) conditions **(3-0, Sosebee & Varner absent)**.

There were **no public comments submitted** in advance of the Planning Commission meeting and **five (5) people spoke in opposition during the public hearing.**

There have been no changes to the request since the Planning Commission took action.

Planning Commission Approval Conditions:

1. Development of the subject parcel shall be limited to one (1) site-built single family residence developed with similar materials and colors as surrounding dwelling units established within the existing development. Final elevations shall be subject to the approval of the Planning Director.
2. The Applicant/ Developer shall satisfy all comments from Environmental Health Department, Hall County Fire Marshal, Public Works and Utilities, and Georgia Department of Transportation prior to obtaining a certificate of occupancy.
3. The following statement regarding the potential impacts of agricultural operations in the area shall be made a part of any plat recorded on the property: “Owners, occupants, and users of property shown on this plat

are hereby informed of the impacts associated with normal farming practices which may take place on adjacent and nearby property including, but not limited to, noise, odors, dust, the operation of machinery of any kind, the storage and disposal of manure, and the application of fertilizers, herbicides, and pesticides. Therefore, owners, occupants, and users of the property shown on this plat should be prepared to expect the effects of such practices."

4. All conditions of zoning shall be recorded on the final plat.
5. The only allowable uses are the ones allowed in R-I zoning.

HALL COUNTY PLANNING COMMISSION
RECOMMENDATION REPORT

Applicant ..... Bourdua REI, LLC / Brian Bourdura

Request ..... Rezone from Planned Residential Development (PRD, 17.180.060) to Agricultural Residential III (AR-III, 17.110)

Proposed Use ..... Permitted uses in AR-III

Size ..... 4.36± acres

Zoning ..... Current: Planned Residential Development (PRD, 17.180.060) | Proposed: Agricultural Residential III (AR-III, 17.110)

Location ..... **4033 Hidden Hollow Drive** | Tax Parcel 10098 000125

Commission District ..... Two

Planning Commission Date ..... June 5, 2023

Staff Recommendation ..... **Approval with Conditions, as the proposed request is consistent with the residential future land use designation in the Comprehensive Plan.**

Planning Commission Recommendation.....**Approval, with conditions**
Vote: 3-0 (Sosebee & Varner absent)

Planning Commission Conditions:

1. Development of the subject parcel shall be limited to one (1) site-built single family residence developed with similar materials and colors as surrounding dwelling units established within the existing development. Final elevations shall be subject to the approval of the Planning Director.
2. The Applicant/ Developer shall satisfy all comments from Environmental Health Department, Hall County Fire Marshal, Public Works and Utilities, and Georgia Department of Transportation prior to obtaining a certificate of occupancy.
3. The following statement regarding the potential impacts of agricultural operations in the area shall be made a part of any plat recorded on the property: "Owners, occupants, and users of property shown on this plat are hereby informed of the impacts associated with normal farming practices which may take place on adjacent and nearby property including, but not limited to, noise, odors, dust, the operation of machinery of any kind, the storage and disposal of manure, and the application of fertilizers, herbicides, and pesticides. Therefore, owners, occupants, and users of the property shown on this plat should be prepared to expect the effects of such practices."

4. All conditions of zoning shall be recorded on the final plat.
5. The only allowable uses are the ones allowed in R-I zoning.

Public Forum:

Robert Beales, 4059C Hidden Hollow, Gainesville, spoke in opposition. Concerns were devaluing properties.

Dot Holder, 4078C Hidden Hollow, Gainesville, spoke in opposition. Concerns were visuals and property value.

Jean Buffington, 4024C Hidden Hollow Drive, Gainesville, spoke in opposition. Concerns were aesthetics, community integrity and property value.

Melanie Wise, 4013 Hidden Hollow Drive, Gainesville, spoke in opposition. Concerns were the aesthetics and creek.

Phyllis Hall, 4051 Hidden Hollow Drive, Gainesville, spoke in opposition. Concerns were placing a mobile home.

Summary Analysis

The applicant is requesting to rezone the subject property from Planned Residential Development (PRD, 17.180.060) to Agricultural-Residential-III (AR-III, 17.110) for the purpose of developing the property with a single-family manufactured home. The existing PRD was approved in 1986 for duplexes and triplexes and was developed as such, excluding the subject parcel. The applicant's narrative states that the soil composition of the property and septic regulations limit the property to a maximum of three bedrooms for any residence. Manufactured homes are listed as a permitted use within the Agricultural-Residential-III (AR-III, 17.110) zoning district.

The applicant has requested no variances as part of this application, nor has staff identified any during the analysis of this request.

Based on the future land-use plan, staff finds the requested zoning designation *consistent* with the future land use classification of Residential in the Comprehensive Plan.

Zoning Analysis

The proposed use of a single-family residence is consistent with the permitted uses within the Agricultural Residential III (AR-III, 17.110) zoning district.

When considering a zoning amendment to the zoning maps, the following items must be considered:

1. Whether the zoning proposal will permit a use that is suitable in view of the use and development of adjacent and nearby property; **No, the proposed use of a manufactured home is incongruent with the existing townhome development. Although the subject property is located in the western portion of the county, where a mixture of agricultural and residential uses are common, the subdivision is developed with 131 dwelling units, which are a mix of duplex and triplex homes.**

2. Whether the zoning proposal will adversely affect the existing use or usability of adjacent or nearby property; **The zoning proposal should not adversely affect the existing use or usability of adjacent or nearby properties. The proposed use of a single-family residential lot is consistent with the surrounding development pattern, however, a manufactured home would not be consistent with the existing neighborhood character.**

3. Whether the property to be affected by the zoning proposal has reasonable economic use as currently zoned. **The subject property is zoned Planned Residential Development (PRD, 17.180.060) and was approved as part of the Hidden Hollow Townhome development, but was never platted as an approved building lot within the development. As such, the applicant is requesting to have the property rezoned so it is not subject to the requirements of the PRD.**

4. Whether the zoning proposal will result in a use which will or could cause an excessive or burdensome use of existing streets, transportation facilities, or utilities; **No, the proposed use should not cause an excessive or burdensome use of existing streets, transportation facilities, or utilities.**

5. Whether the zoning proposal is in conformity with the policy and intent of the land use plan; **Yes, the requested zoning designation is consistent with the future land use classification of Residential in the Comprehensive Plan.**

6. The extent to which property values are diminished by the existing zoning restrictions; **Staff has not identified that the existing property values have been impacted by the existing zoning.**

7. The extent to which the destruction of the subject property's value under the existing zoning promotes the health, safety, morals or general welfare of the public; **Staff is unable to comment on the impact of property values without a full market analysis. Multiple factors impact property value including construction types, proposed uses, and maintenance. Often it is difficult to determine the effect of a development on adjacent properties until the development is completed.**

8. The relative gain to the public as compared to the hardship imposed upon the individual property owner; **Staff has identified that the property as currently zoned cannot be developed in accordance with the existing PRD standards due to septic limitations.**

9. The length of time the property has been vacant as zoned considered in the context of land development in the area in the vicinity of the property; **Hall County aerial imagery shows various accessory structures on the property, though the application states that the property is currently vacant.**

10. Whether there are other existing or changing conditions affecting the use or development of the property which give supporting grounds for either approval or disapproval of the zoning proposal; **There are no known changing conditions affecting the use or development of the property.**

11. Whether the change would create an isolated district unrelated to the surrounding districts; **No, rezoning the property from Planned Residential Development (PRD, 17.180.060) to Agricultural-Residential-III (AR-III, 17.110) will be consistent with adjacent properties to the west.**

12. Whether the present zoning district boundaries are illogically drawn in relation to existing conditions in the area; **There is no evidence that the present zoning district boundaries are illogically drawn.**

13. Whether the change requested is out of scale with the needs of the county as a whole or the immediate neighborhood; **The proposed use is not out of scale with the needs of the county as a whole. The**

preservation of large agricultural tracts of land in the western portion of the county are consistent with the intent of the residential future land use classification in the Comprehensive Plan.

14. Whether it is impossible to find adequate sites for the proposed use in districts permitting such use and already appropriately zoned; **There are other properties within the County that support the proposed use based on the Future Land Use Map and existing zoning designations.**

15. Whether the need for rezoning could be handled instead by a variance request to the [Planning Commission]; **No, the request could not be handled alternatively as a variance as the property is subject to the conditions of the Planned Residential Development (PRD, 17.180.060).**

16. Whether there would be an ecological or pollution impact resulting from major modifications to the land if the request is granted; **There are no significant changes proposed to the site. Further, any land disturbance activities on the property shall be required to go through the land development permitting process, and as a result are subject to local, state, and federal regulations. As a result there should not be an ecological or pollution impact resulting from any modification to the land if the request is granted.**

17. Whether there is reasonable evidence based upon existing and anticipated land use that would indicate a mistake was made in the original zoning of the property; **There is no evidence to indicate a mistake was made in the original zoning of the property.**

Per 17.120.010 (permitted uses within the AR-IV zoning district) Class A single-family manufactured homes are a permitted use. Manufactured home is defined in 17.20.711. as a dwelling fabricated in an off-site facility for installation or assembly at the building site, bearing a label certifying that it is constructed in compliance with the National Manufactured Housing Construction and Safety Standards Act of 1974 (42 U.S.C. 5401, et seq.), which first became effective on June 15, 1976. The term "manufactured home" includes a structure, transportable in one or more sections, which, in the traveling mode, is eight body feet or more in width or 40 body feet or more in length, or when erected on-site, is 320 or more square feet in floor area, and which is built on a permanent chassis and designed to be used as a dwelling with or without a permanent foundation when connected to the required utilities and includes the plumbing, heating, air-conditioning, and electrical systems contained therein, except that such term includes any structure which meets all the requirements of this definition except the size requirement and with respect to which the manufacturer voluntarily files a certification required by the Secretary of Housing and Urban Development and complies with the standards established under the National Manufactured Housing Construction and Safety Standards Act of 1974 (42 U.S.C. 5401, et seq.). There may only be one class A single-family manufactured home on each parcel.

17.380.050. - Submission requirements for a rezoning request

A. Any person or persons requesting a change in the official zoning map or use subject to approval of the county commission shall file an application with a plat or map of the property attached thereto, together with payment of such fees set forth in chapter 17.30 to cover administrative and advertising costs, in the planning department office. Such person or persons or their authorized agent shall appear in person at the public hearing held to consider the district change. **Proposal meets the requirement. Applicant has paid the appropriate fees and understands that someone must be present at both the Hall County Planning Commission meeting and the voting meeting of the Hall County Board of Commissioners.**

B. All applications for a change of zoning classification or use subject to approval of the county commission shall include:

1. A narrative statement identifying the existing and proposed use of the property and addressing each of the criteria set forth in section 17.380.060.C of this section [chapter]. **The applicant has submitted a narrative and site plan but did not specifically address the criteria listed in 17.380.060.**

2. A site plan drawn to scale designating the area covered by the application and identifying existing and proposed buildings and uses, adjacent existing land uses, zoning on contiguous parcels, including those across an abutting public right-of-way, and any other significant site improvements proposed to accommodate the proposed use or buffer adjacent uses, etc., or a plat of the subject property where no specific land use is proposed. In cases where only a plat or map is provided and no land use is proposed, the planning commission and county commission shall evaluate the application based on the most intense possible land use permitted in the proposed district**. The submitted site plan is hand drawn, and shows the location of the proposed residence set back 270 feet from the front property line**

C. For any application for a slow rate land treatment system (see chapter 17.20), the following additional requirements apply. **This standard is not applicable as the site will be served an onsite septic system.**

D. For any application proposing the development of 100 or more residential dwelling units, a traffic impact study shall be submitted prior to consideration of the application by the planning commission. At the applicant's expense, the traffic impact study shall be prepared by a professional engineer in accordance with requirements established by the Hall County Engineering Department. The engineering department shall review the traffic impact study and forward any comments to the Hall County Planning Commission. **As there are not 100 or more residential dwelling units proposed this question is not applicable.**

Development Support and Constraints – Departmental / Agency Comments

Hall County Environmental Health

In an email dated May 17, 2023, Emily McGahee states "Must meet all Environmental Health residential septic system permitting requirements. A copy of recorded plat showing property in current configuration must be submitted at time of permit application."

Hall County Fire Marshal

In an email dated May 16, 2023, John Hornick, NPQ Fire Inspector 1, Plans Review Lieutenant stated "The Hall County Fire Marshal's Office has no comments as proposed."

Hall County Public Works and Utilities

In a memo dated May 18, 2023, Bill Nash, Director of Public Works and Utilities, provided the following comments:

Engineering:

This property may have multiple streams and springheads as depicted on "plat for E.R.E. INC." any development on this property must show all stream buffers and flood zones.

The site may require a stormwater management report should the site plan indicate the proposed development meets stormwater thresholds for impervious surfaces and/or disturbed acreage

FEMA and Hall County studied Flood plains present on site.

Show stream buffer and impervious setback from wrested vegetation not center line of stream

Traffic:
No comment.

Utilities
Gainesville sewer district.

Georgia Department of Transportation
An email dated May 11, 2023 from Jonathan Peevy, Assistant District Traffic Engineer, confirmed this project will not require GDOT coordination.

- **Excerpts from the minutes of the June 5, 2023 meeting**

Applicant's Presentation:

Randi Doveton, Planning Director, presented a summary of the request.

Brian Bourdua, 4033 Hidden Hollow Drive, Gainesville, presented the request. The applicant stated that he would like to place a manufactured home on the land since it is more cost effective. The applicant stated that he would be willing to maintain landscaping to match the surrounding properties.

Rebuttal

The applicant stated that the property is not part of the HOA and there is adjacent land that is AR-III. The applicant stated that the home would be placed further back so it would not interfere with the aesthetic or creek.

Public Forum:

Robert Beales, 4059C Hidden Hollow, Gainesville, spoke in opposition. Concerns were devaluing properties.

Dot Holder, 4078C Hidden Hollow, Gainesville, spoke in opposition. Concerns were visuals and property value.

Jean Buffington, 4024C Hidden Hollow Drive, Gainesville, spoke in opposition. Concerns were aesthetics, community integrity and property value.

Melanie Wise, 4013 Hidden Hollow Drive, Gainesville, spoke in opposition. Concerns were the aesthetics and creek.

Phyllis Hall, 4051 Hidden Hollow Drive, Gainesville, spoke in opposition. Concerns were placing a mobile home.

Planning Commission Comments:

Ms. Pilcher questioned the reasoning behind rezoning. Mr. Hunt stated that he would not be opposed to the rezoning but he would like the visuals to remain consistent with what is existing.

Motion: ***A motion to approve, with conditions was made by Mr. Hunt and seconded by Ms. Pilcher. Vote: 3-0 (Sosebee & Varner absent)***

Conditions:

1. Development of the subject parcel shall be limited to one (1) site-built single family residence developed with similar materials and colors as surrounding dwelling units established within the existing development. Final elevations shall be subject to the approval of the Planning Director.
2. The Applicant/ Developer shall satisfy all comments from Environmental Health Department, Hall County Fire Marshal, Public Works and Utilities, and Georgia Department of Transportation prior to obtaining a certificate of occupancy.
3. The following statement regarding the potential impacts of agricultural operations in the area shall be made a part of any plat recorded on the property: "Owners, occupants, and users of property shown on this plat are hereby informed of the impacts associated with normal farming practices which may take place on adjacent and nearby property including, but not limited to, noise, odors, dust, the operation of machinery of any kind, the storage and disposal of manure, and the application of fertilizers, herbicides, and pesticides. Therefore, owners, occupants, and users of the property shown on this plat should be prepared to expect the effects of such practices."
4. All conditions of zoning shall be recorded on the final plat.
5. The only allowable uses are the ones allowed in R-I zoning.

HZON23-0021

PLANNING AND DEVELOPMENT DEPARTMENT
2875 BROWNS BRIDGE ROAD, GAINESVILLE, GA 30504
MAILING ADDRESS: PO BOX 1435, GAINESVILLE, GA 30503
t: 770-531-6809 I f: 770-531-3902

HALL COUNTY
GEORGIA
We have it all in Hall

ZONING APPLICATION

Applicant (Name & Mailing Address)

Bourdua REI, LLC / Brian Bourdua
2895 New College Way
Cumming GA 30041
Phone 770-596-6628
Email Address Bourdua@yahoo.com

Property Owner (Name & Mailing Address)

Bourdua REI, LLC / Brian Bourdua
2895 New College Way
Cumming, GA 30041
Phone 770-596-6628
Email Address Bourdua@yahoo.com

Proposed Use Would add 1 brand new (higher-end) 3 bed 2 bath Manufactured Home

Contact Person (Name & Mailing Address)

Brian Bourdua
(same info as above)

Phone 770-596-6628
Email Address Bourdua@yahoo.com

Status of Applicant

- [X] Owner
- [ ] Option to Purchase
- [ ] Area Resident
- [ ] Other

Requested Action

Existing Zoning: PRD
Rezone to: AR-III
Fee:$ 400.00
Receipt #: 859129
Check #: 1203

Tax Parcel Number 10098 000125 ✓
Acreage 5.19
Location Address 4033 Hidden Hollow Dr Gainesville, GA 30506

I hereby certify that the above information and all attached information are true and correct.

Sign _____ Date: 4/10/23

Applicant must complete all information above. Failure to complete this section will result in the refusal of the application. The Planning Department has 15 days to review all applications and will set the dates for each application. If the application is found insufficient, an agenda date will not be set until the required information is submitted. Please note that the Planning Commission and County Commission dates are tentative.

Application Withdrawal: I hereby **withdraw** the application.

Sign _____ Date: _____

Staff Use Only

Application Date: 4/12/2023 Taken by: B. Garmon
Tentative Planning Commission Date: 6/5/2023 Tentative County Commission Date: 7/13/2023
County Commission District: TWO

PLANNING AND DEVELOPMENT DEPARTMENT
2875 BROWNS BRIDGE ROAD, GAINESVILLE, GA 30504
MAILING ADDRESS: PO BOX 1435, GAINESVILLE, GA 30503
t: 770-531-6809 I f: 770-531-3902

HALL COUNTY
GEORGIA
We have it all in Hall

CAMPAIGN CONTRIBUTIONS DISCLOSURE FORM

This form must be completed by the applicant and property owner, or person representing the property owner, for all zoning actions.

OCGA § 36-67A-3[C] Disclosure of campaign contributions:

(b) When any applicant for zoning action has made, within two years immediately preceding the filing of the applicant's application for the zoning action, campaign contributions aggregating $250.00 or more to a local government official who will consider the application, it shall be the duty of the applicant to file a disclosure report with the governing authority of the respective local government showing:

(3) The name and official position of the local government official to whom the campaign contribution was made; and

(4) The dollar amount and description of each campaign contribution made by the applicant to the local government official during the two years immediately preceding the filing of the application for the rezoning action and the date of each such contribution.

(b) The disclosures required by subsection (a) of this Code section shall be filed within ten days after the application for the zoning action is first filed. (Code 1981, Section OCGA § 36-67A-3[C], enacted by GA L. 1986, page 1269, Section 1, GA L. 1991, page 1365, Section 1).

I hereby certify that I have read the above and that:

I have**____ I have not X

within the two years immediately preceding this date, made any contribution(s) aggregating $250.00 or more to any local government official involved in the review or consideration of this application.

**If you have made such contributions, you must provide the data required below within ten (10) days of filing this application.

Name of Official(s): _____ Office: _____

Dollar Amount: _____ Date of Contribution: _____

Applicant's/Owner's Signature: _____ **Date:** 4/10/23

Applicant's/Owner's Name (Printed): Bourdua REI LLC / Brian Bourdua

Revised December 2019

Rezoning Narrative for 4033 Hidden Hollow Dr Gainesville, GA 30506

Current zoning for this lot is PRD
Proposed rezoning for this lot is ARIII

This is a unique property, in that it is a larger lot (over 4 acres), but it's only suitable for a small number of total bedrooms. This was determined by having a soil scientist conduct a level 3 soil analysis over the entire lot. After a review of the topography, the natural land features and the results of the soil test, the Hall County Environmental Department made the determination that this particular property will only be permitted to install a large enough septic system to handle 3 total bedrooms.

This development and area consists primarily of multi family homes, but also contains some stick built single family houses, manufactured houses, and various other buildings. Because this large lot can only handle 3 bedrooms it isn't economically feasible to build a multi family house on this land.

My proposal would be to place a brand new double wide 28 ft by 56 ft manufactured house on the lot with the appropriate sized septic system. The exact model and floor plan is the Clayton Epic Explorer. It's a very nice, higher end home (see attached floor plan and a picture of the outside). Features will include:
- Warranties throughout the entire home with all systems being brand new
- Upgraded decorative brick "skirting"
- Highest standard for setup, including double cinder block piers with sheer-wall for added support
- Simplisafe alarm system

The current zoning of the lot will only allow for a stick built home and was zoned as PRD with the idea that the land would eventually hold multi-family homes. I would like to request for the zoning to be changed to ARIII to allow for the manufactured home I'd like to place on it. The main reasons:

1) This lot cannot really handle a multi family setup
2) There are other mobile homes in the area and on this street
3) The land is adjacent to other land zoned ARIII (its touching ARIII land)
4) I suspect this land was zoned ARIII before being changed to PRD, with the idea that a multi family dwelling would eventually be built on the house (which has turned out to not be a feasible option)

I don't believe this is too relevant to your decision but I when I signed the contract to purchase the land I was under the belief that the zoning was ARIII as it was advertised that way and showed up as ARIII on qpublic. Turned out that this zoning was not correct based on the GIS map. Figured I'd at least mention this, but will also call out, in full disclosure, that I communicated with the planning department prior to the closing of the lot and learned of the true zoning.

Hoping we can make this work to provide a really nice and affordable housing opportunity for a family and to also provide some additional revenue for the county so that everyone benefits.

I've also included the soil test results along with the findings of the Hall County Environmental Department stating that the land is only suitable for a 3 bedroom house.

SITE PLAN

4033 HIDDEN HOLLOW DR
Gainesville, GA 30506

Deck 1: 8x8
Deck 2: 10x10
Deck 3: 4x4

Setbacks:

Front: 270ft
Back: 72ft
Side: 230ft
Side: 330ft

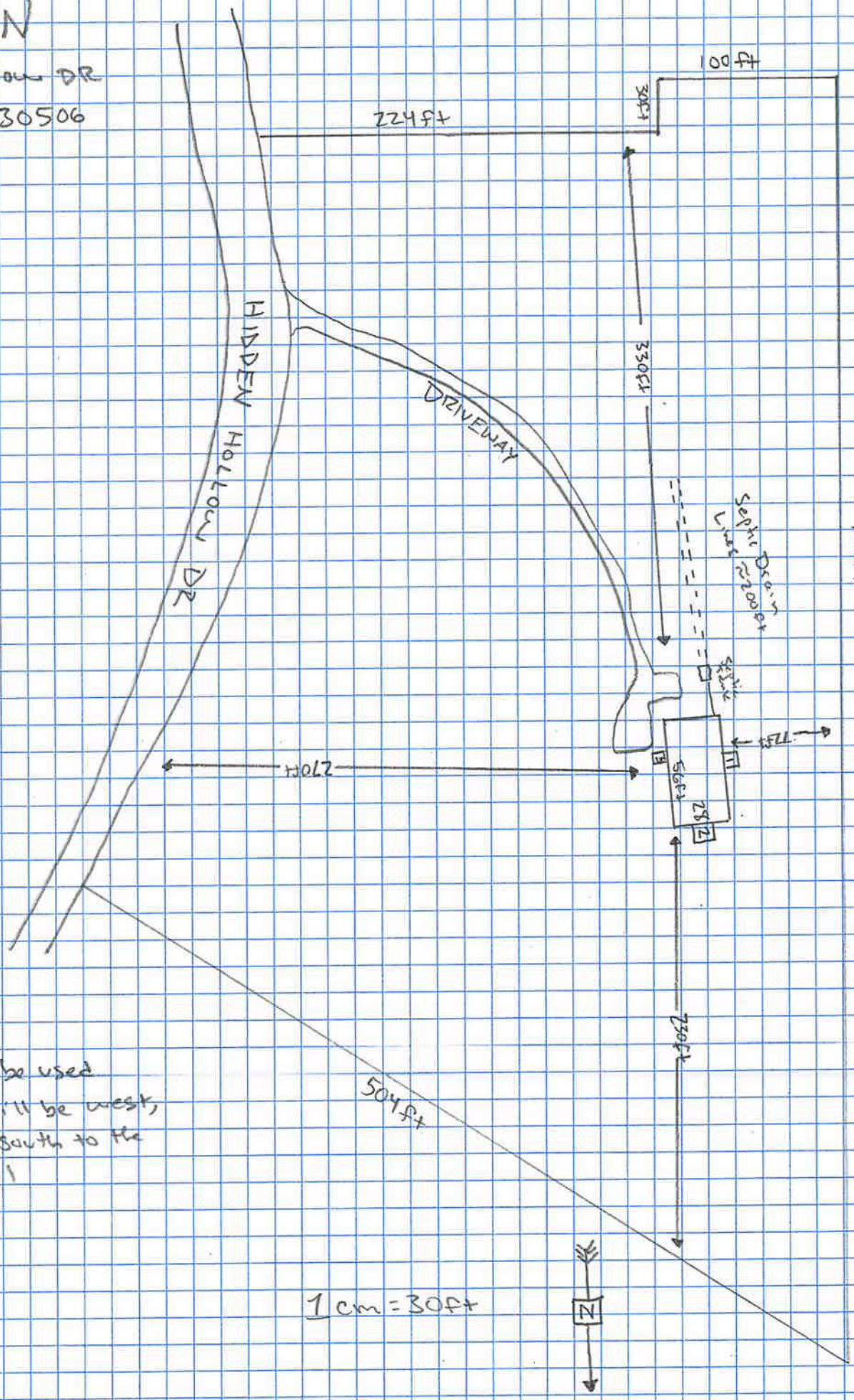

- Public water to be used
- Septic repair will be west, up the hill or south to the other usable soil

671 — 431

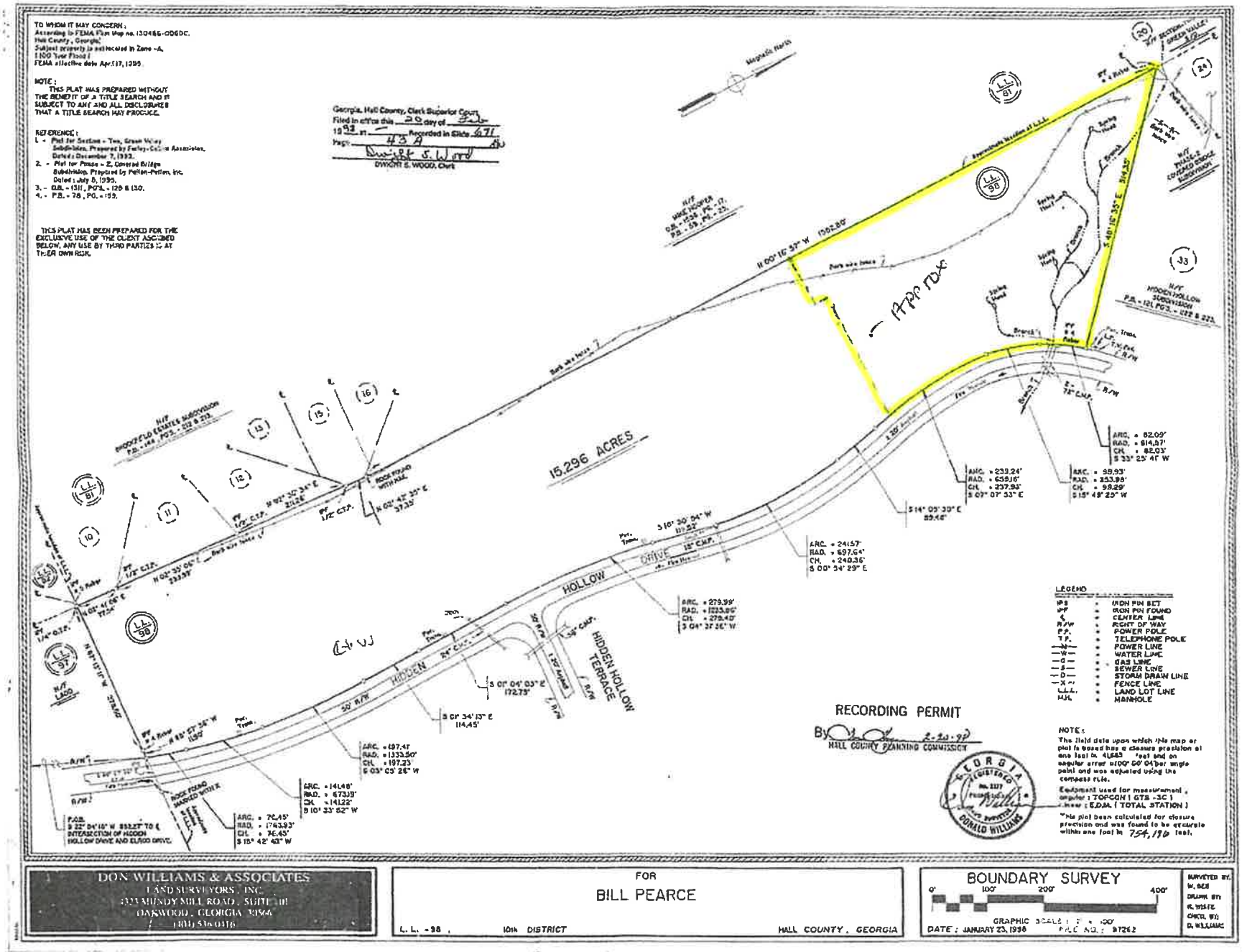
TO WHOM IT MAY CONCERN :
According to FEMA Flim Map no. 130465-0060C,
Hall County , Georgia,
Subject property is delineated in Zone - A.
(100 Year Flood)
FEMA effective date April 17, 1995.
NOTE :
THIS PLAT WAS PREPARED WITHOUT THE BENEFIT OF A TITLE SEARCH AND IS SUBJECT TO ANY AND ALL DISCLOSURES THAT A TITLE SEARCH MAY PRODUCE.
REFERENCE :
1. - Plat for Section - Two, Green Valley Subdivision, Prepared by Farley-Colvin Associates, Dated : December 7, 1972.
2. - Plat for Phase - 2, Covered Bridge Subdivision, Prepared by Pelton-Pelton, Inc. Dated : July 8, 1995.
3. - D.B. - 1311, P.G.L. - 126 & 130.
4. - P.B. - 78 , P.G. - 199.
THIS PLAT HAS BEEN PREPARED FOR THE EXCLUSIVE USE OF THE CLIENT ASCRIBED BELOW, ANY USE BY THIRD PARTIES IS AT THEIR OWN RISK.
Georgia, Hall County, Clerk Superior Court
Filed in office this 20 day of Jan
19 93 at 1 Recorded in Slide 671
Page 43 A
Dwight S. Wood
DWIGHT S. WOOD, Clerk
Magnetic North
N/F MAE HOOPER D.B. - 258, PG. - 17, P.B. - 55, PG. - 25.
N 00° 16' 37" W 1502.80'
APPROX
15.296 ACRES
N/F HIDDEN HOLLOW SUBDIVISION P.B. - 121, PG.S. - 222 & 223.
N/F THAD E. COVERED BRIDGE SUBDIVISION
N/F RIDGEFIELD ESTATES SUBDIVISION P.B. - 44, PG.S. - 212 & 213.
N/F LADD
ROCK FOUND WITH AXLE
HIDDEN HOLLOW TERRACE
HIDDEN HOLLOW DRIVE
ARC. = 82.09'
RAD. = 814.57'
CH. = 82.03'
S 33° 25' 41" W
ARC. = 233.24'
RAD. = 658.16'
CH. = 232.03'
S 07° 07' 33" E
ARC. = 99.93'
RAD. = 253.98'
CH. = 99.29'
S 15° 48' 25" W
ARC. = 241.57'
RAD. = 697.64'
CH. = 240.36'
S 00° 34' 29" E
ARC. = 279.99'
RAD. = 1223.80'
CH. = 279.40'
S 04° 37' 26" W
ARC. = 497.41'
RAD. = 1333.50'
CH. = 197.23'
S 03° 05' 26" W
ARC. = 141.48'
RAD. = 673.39'
CH. = 141.22'
S 10° 33' 52" W
ARC. = 76.45'
RAD. = 1763.93'
CH. = 76.45'
S 15° 42' 43" W
P.O.B.
S 22° 04' 10" W 853.27' TO ℄ INTERSECTION OF HIDDEN HOLLOW DRIVE AND ELROD DRIVE.
RECORDING PERMIT
By 2-20-98
HALL COUNTY PLANNING COMMISSION
GEORGIA REGISTERED No. 2377 LAND SURVEYOR DONALD WILLIAMS
LEGEND
IPS = IRON PIN SET
IPF = IRON PIN FOUND
℄ = CENTER LINE
R/W = RIGHT OF WAY
P.P. = POWER POLE
T.P. = TELEPHONE POLE
—x— = FENCE LINE
L.L.L. = LAND LOT LINE
M.H. = MANHOLE
NOTE :
The field data upon which this map or plat is based has a closure precision of one foot in 41643 feet and an angular error of 00° 00' 04" per angle point and was adjusted using the compass rule.
Equipment used for measurement : computer : TOPCON (GTS - 3C) meter : E.D.M. (TOTAL STATION)
"This plat been calculated for closure precision and was found to be accurate within one foot in 754,190 feet.
DON WILLIAMS & ASSOCIATES
LAND SURVEYORS , INC.
3333 MUNDY MILL ROAD , SUITE 101
OAKWOOD , GEORGIA 30566
(404) 536-0316
FOR
BILL PEARCE
L. L. - 98 , 10th DISTRICT HALL COUNTY , GEORGIA
BOUNDARY SURVEY
0' 100' 200' 400'
GRAPHIC SCALE : 1" = 100'
DATE : JANUARY 23, 1998 FILE NO. : 97262
SURVEYED BY: W. BEE
DRAWN BY: K. WHITE
CHKD. BY: D. WILLIAMS

DocuSign Envelope ID: 3F017293-E33C-4DD0-A834-7DF94641EBE1

Plat Exhibit " E "

LEGEND

IPF - IRON PIN FOUND
IPS - IRON PIN SET (1/2" REBAR)
AIF - ANGLE IRON FOUND
P/L - PROPERTY LINE
R/W - RIGHT OF WAY
C/L - CENTER LINE
-x- FENCE
-P- POWER LINE
-W- WATER LINE
LLL - LAND LOT LINE
LL - LAND LOT
WM - WATER METER
PP - POWER POLE
CT - CRIMP TOP
OT - OPEN TOP
RB - REBAR
-T- TELEPHONE LINE

DS

COURSE	BEARING	DISTANCE
L-1	S 14°09'30"E	88.48'
L-2	S 10°30'54"W	118.38'

CURVE	RADIUS	LNGTH	CHORD	CH.BEARING
C-1	814.2'	82.09'	82.03'	S 33°25'41"W
C-2	853.26'	98.93'	98.89'	S 15°49'29"W
C-3	858.17'	238.84'	237.93'	S 01°07'55"E
C-4	887.14'	241.36'	240.36'	S 00°54'29"E
C-5	1230.16'	227.73'	227.40'	S 04°31'30"W

FROM:
SOUTHEAST POINT TO THE NW CORNER LL 98

N/F MIKE HOOPER

9.79 ACRES

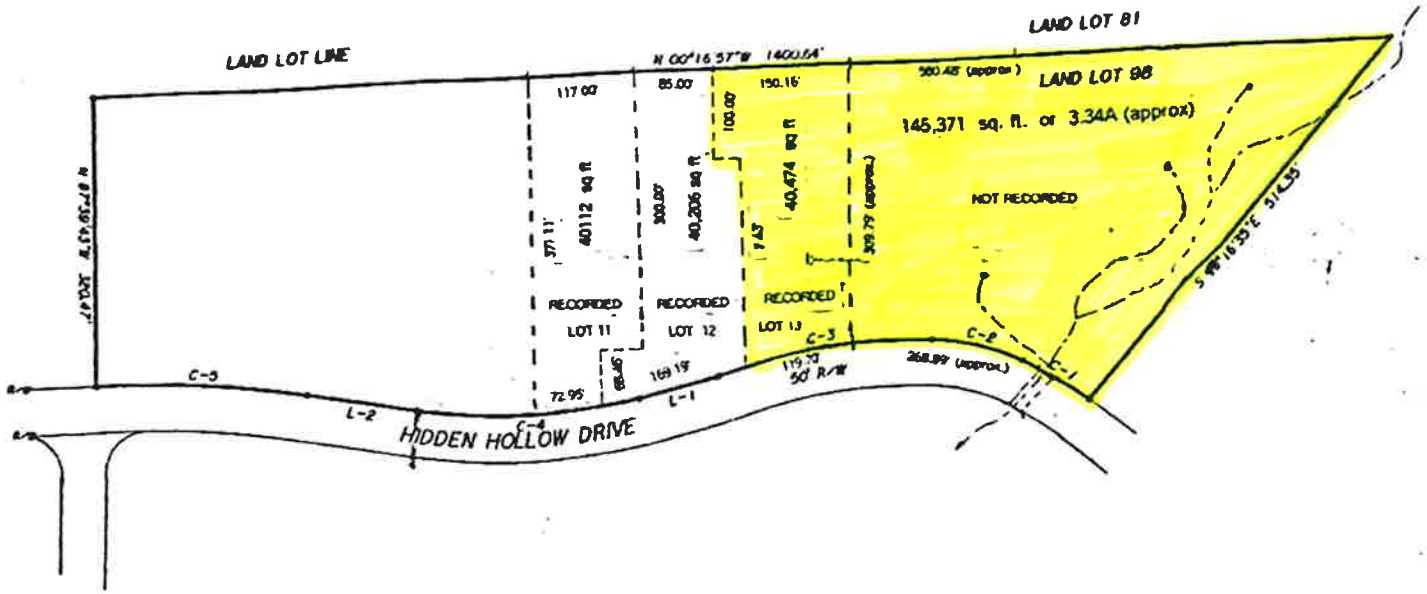

PLAT FOR

E. R. E. INC.

LAND LOT 98 DISTRICT 12

HALL COUNTY, GEORGIA

GEORGIA REGISTERED LAND SURVEYOR

SURVEYOR:
HENRY G. JARRARD #1182
322 OAK ST. NW, SUITE 3
GAINESVILLE, GA. 30501
PHONE - (770) 534-3481

100 0 100 200 300
GRAPHIC SCALE - FEET
SCALE: 1" = 100'

PS 811-1933

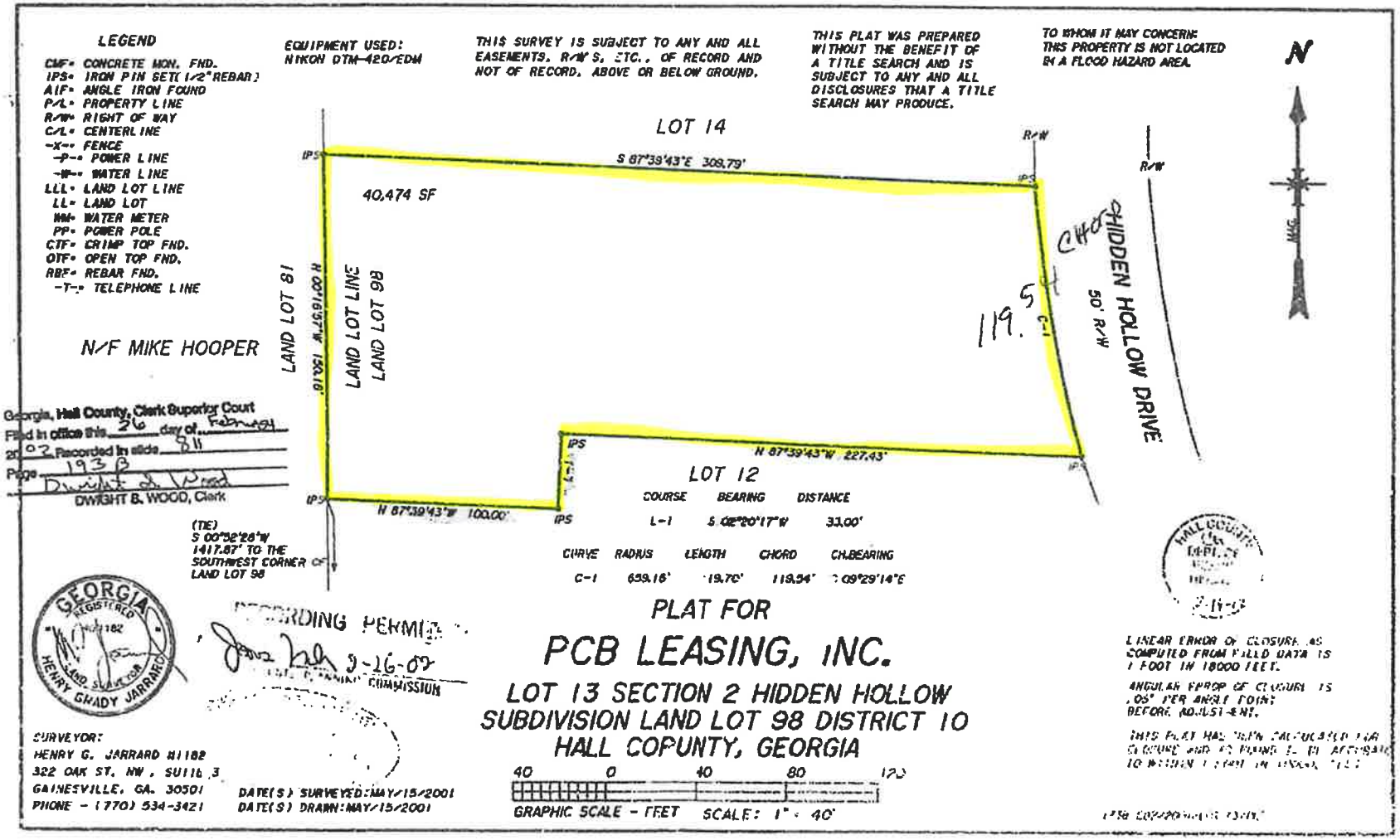
LEGEND
CMF- CONCRETE MON. FND.
IPS- IRON PIN SET(1/2"REBAR)
AIF- ANGLE IRON FOUND
P/L- PROPERTY LINE
R/W- RIGHT OF WAY
C/L- CENTERLINE
-X- FENCE
-P- POWER LINE
-W- WATER LINE
LLL- LAND LOT LINE
LL- LAND LOT
WM- WATER METER
PP- POWER POLE
CTF- CRIMP TOP FND.
OTF- OPEN TOP FND.
RBF- REBAR FND.
-T- TELEPHONE LINE
EQUIPMENT USED:
NIKON DTM-420/EDM
THIS SURVEY IS SUBJECT TO ANY AND ALL EASEMENTS, R/W'S, ETC., OF RECORD AND NOT OF RECORD, ABOVE OR BELOW GROUND.
THIS PLAT WAS PREPARED WITHOUT THE BENEFIT OF A TITLE SEARCH AND IS SUBJECT TO ANY AND ALL DISCLOSURES THAT A TITLE SEARCH MAY PRODUCE.
TO WHOM IT MAY CONCERN:
THIS PROPERTY IS NOT LOCATED IN A FLOOD HAZARD AREA.
N
LOT 14
S 87°39'43"E 309.79'
40,474 SF
LAND LOT 81
LAND LOT LINE
LAND LOT 98
N 00°16'37"W 1324.18'
N/F MIKE HOOPER
R/W
HIDDEN HOLLOW DRIVE
50' R/W
119.5'
C-1
IPS
N 87°39'43"W 227.43'
L-1
LOT 12
N 87°39'43"W 100.00'
COURSE BEARING DISTANCE
L-1 S 02°20'17"W 33.00'
CURVE RADIUS LENGTH CHORD CH.BEARING
C-1 659.16' 119.70' 119.54' S 09°29'14"E
(TIE)
S 00°58'28"W
1417.87' TO THE
SOUTHWEST CORNER OF
LAND LOT 98
Georgia, Hall County, Clerk Superior Court
Filed in office this 26 day of February
2002 Recorded in slide 911
Page 1938
DWIGHT B. WOOD, Clerk
GEORGIA REGISTERED 1182 LAND SURVEYOR HENRY GRADY JARRARD
RECORDING PERMIT
2-16-02
PLAT FOR
PCB LEASING, INC.
LOT 13 SECTION 2 HIDDEN HOLLOW SUBDIVISION LAND LOT 98 DISTRICT 10 HALL COUNTY, GEORGIA
40 0 40 80 120
GRAPHIC SCALE - FEET SCALE: 1" = 40'
HALL COUNTY GIS DEPT.
2-16-02
LINEAR ERROR OF CLOSURE AS COMPUTED FROM FIELD DATA IS 1 FOOT IN 18000 FEET.
ANGULAR ERROR OF CLOSURE IS .05' PER ANGLE POINT BEFORE ADJUSTMENT.
SURVEYOR:
HENRY G. JARRARD #1182
322 OAK ST. NW, SUITE 3
GAINESVILLE, GA. 30501
PHONE - (770) 534-3421
DATE(S) SURVEYED: MAY/15/2001
DATE(S) DRAWN: MAY/15/2001

SURVEYORS CERTIFICATIONS

The plat is a retracement of an existing parcel or parcels of land and does not subdivision assume a corner post or make any changes to any real property boundaries. The recording information of the documents, maps, plats, or other instruments which created the parcel or parcels are stated hereon. RECREATION OF THIS PLAT DOES NOT IMPLY APPROVAL OF ANY LOCAL JURISDICTION, AVAILABILITY OF PERMITS, COMPLIANCE WITH LOCAL REGULATIONS OR REQUIREMENTS, OR SUITABILITY FOR ANY USE OR PURPOSE OF THE LAND.

Furthermore, the undersigned land surveyor certifies that this plat complies with the minimum technical standards for property surveys in Georgia as set forth in the rules and regulations of the Georgia Board of Registrants for Professional Engineers and Land Surveyors and as set forth in O.C.G.A. Section 15-6-67.

DRAFT

04.12.23

Surveyor: P. Manley, GA #3220

DRAWING INFORMATION

F. DATE: 13 JANUARY 2022	DATE: 17 JANUARY 2022
DRAWN BY: K MANLEY	PROJECT NO: 22104

FILE NAME: 22104V.DWG

ATLAS LAND SURVEYING & MAPPING

97 GRIDDLE BROTHERS ROAD – WOODSTOCK, GA 30564

Phone: 770.213.7023 – Email: kmanley@atlasweb.com – GA PE No. 0035644 (PE, LS, CE, SE, SP)

REVISIONS

RE-TRACEMENT SURVEY FOR:

KAUSHAL THAKKAR

LAND LOT 98 – 10TH DISTRICT
HALL COUNTY, GEORGIA

HALL COUNTY NOTES

1. ENGINEERING NOTES
   - ANY STREAM OR STATE WATER LOCATED ON THIS PROPERTY MAY BE SUBJECT TO A 50 FOOT UNDISTURBED NATURAL BUFFER AND A 75 FOOT IMPERVIOUS SURFACE SETBACK (HALL COUNTY CODE § 12.270).
   - IF A PROPERTY IS LOCATED IN THE NORTH GEORGIA MOUNTAINS OVERLAY DISTRICT, THEN ADDITIONAL STREAM BUFFER AND IMPERVIOUS SETBACKS MAY BE REQUIRED FOR COMPLIANCE (HALL COUNTY CODE § 220.240).
   - A PORTION OF THIS PROPERTY IS LOCATED IN A FLOOD HAZARD AREA AS SHOWN ON FLOOD INSURANCE RATE MAP NO. 13139C0151G, DATED 04 APRIL 2018.
   - A PORTION OF THIS PROPERTY IS LOCATED IN THE HALL COUNTY FUTURE FLOOD ZONE PER HALL MAPPER GIS.
   - IF RESIDENTIAL PROPERTY IS SUBDIVIDED INTO SEVEN LOTS OR MORE WITH ALL LOTS ACCESSING EXISTING HALL COUNTY, GEORGIA ROADS, THEN STORM WATER MANAGEMENT IS REQUIRED FOR COMPLIANCE (HALL COUNTY CODE § NO. 120 & § 160.130).
2. ENVIRONMENTAL NOTES
   - OVERALL LOT SIZE: 4.24 ACRES
   - NON-RESIDENTIAL LOT SIZE: 2.51 ACRES

SURVEYORS NOTES

1. DATUM
   - STATE PLANE GRID (GEORGIA WEST ZONE) AS DEFINED BY NAD83 & NAVD88 (IF REQUIRED) BY NETWORK RTK OBSERVATIONS
   - U.S. SURVEY FOOT
2. CLOSURE STATEMENT
   - THE FIELD DATA UPON WHICH THIS MAP OR PLAT IS BASED HAS A CLOSURE PRECISION OF 1 FOOT IN 22,847 FEET AND AN ANGULAR ERROR OF 04 SECONDS PER ANGLE POINT, AND WAS ADJUSTED USING THE COMPASS RULE. THIS PLAT HAS BEEN CALCULATED FOR CLOSURE AND ITS ACCURACY IS 1 FOOT IN 15,047 FEET.
3. EQUIPMENT STATEMENT
   - LINEAR AND ANGULAR MEASUREMENTS OBTAINED USING A LEICA TS12 ROBOTIC TOTAL STATION. NETWORK RTK OBSERVATIONS OBTAINED USING A LEICA GS14 GPS RECEIVER.
4. TITLE
   - THIS SURVEY WAS PREPARED WITHOUT THE BENEFIT OF A CURRENT ABSTRACT OF TITLE. THERE COULD BE OTHER MATTERS OF RECORD AFFECTING THE PROPERTY.
5. REFERENCE INFORMATION NOT SHOWN
   - A. PB 59 PG 25
   - B. PB 121 PG 222
   - C. CONDO PB 6 PG 42
   - D. PB 343 PG 30A
   - E. PB 455 PG 138A
   - F. PB 811 PG 155B
   - G. PB 868 PG 21 & 105
6. CERTIFICATION
   - A. THIS DRAWING WAS PREPARED FOR THE EXCLUSIVE USE FOR THE CLIENT NAMED HEREON AND REPRESENTS A SPECIFIC SCOPE OF SERVICES.
   - B. ANY USE BY THIRD PARTIES IS AT THEIR OWN RISK.
7. FLOOD ZONE
   - BASED ON GRAPHICAL INTERPRETATION A PORTION OF THIS PROPERTY IS SITUATED IN UNSHADED "ZONE X (AREAS DETERMINED TO BE OUTSIDE 0.2% ANNUAL CHANCE FLOOD PLAIN)" AS DEPICTED ON THE NFIP FLOOD INSURANCE RATE MAP NO. 13139C0151G, HAVING AN EFFECTIVE DATE OF 04 APRIL 2018. USE OF THIS INFORMATION IS AT THEIR OWN RISK AND ARE CAUTIONED THAT A MORE PRECISE FLOOD DELINEATION MAY BE NECESSARY.
8. STREAMS, BODIES OF WATER, & WETLANDS
   - ALL STREAMS, BODIES OF WATER, AND WETLANDS MAY BE SUBJECT TO STATE, COUNTY, AND LOCAL BUFFERS AND/OR RESTRICTIONS. ATLAS LAND SURVEYING & MAPPING, LLC MAKES NO INTERPRETATION REGARDING THESE BUFFERS AND/OR RESTRICTIONS. USERS OF THIS SURVEY ARE CAUTIONED TO CONSULT WITH THE APPROPRIATE GOVERNING AUTHORITIES CONCERNING POSSIBLE BUFFERS OR RESTRICTIONS. ATLAS LAND SURVEYING & MAPPING, LLC DISCLAIMS ALL LIABILITY FOR ANY ISSUES THAT MAY ARISE BASED ON BUFFERS AND/OR RESTRICTIONS SHOWN HEREON. ANY BUFFERS, RESTRICTIONS, AND/OR STATEMENTS SHOWN HEREON ARE FOR INFORMATIONAL PURPOSES ONLY. USER OF THIS INFORMATION IS AT THEIR OWN RISK.
9. PROPERTY NOTE
   - HIDDEN HOLLOW WAS ENROLLED AS A CONDOMINIUM SUBDIVISION, AS EVIDENCED BY THE CURRENT RECORDS. THERE ARE TWO REFERENCES REGARDING THE CONDOMINIUM, PB 121 PG 222 & CONDO PB 6 PG 42, BOTH REFERENCES SHOW LOTS 1-33, BLOCK A, THREE LOTS LIKE EAST OF HIDDEN HOLLOW DRIVE AND NORTH/NORTHEAST OF AVA CREEK, ONLY SUBJECT PROPERTY IS SHOWN AS BEING OWNED BY "LAND CONTROL".
   - PORTIONS OF THE SUBJECT PROPERTY HAVE BEEN DEVELOPED, AS EVIDENCED BY THE CURRENT RECORDS AT LEAST ONE REFERENCE. THESE REFERENCES ARE NUMEROUS AND SHOW INDIVIDUAL LOTS. THESE REFERENCES ALSO EVIDENCE THE SUBJECT PROPERTY AS "HIDDEN HOLLOW, SECTION 2" OF APPROX. FIVE SAID SECTION WAS TO HAVE LOTS 1-10. THIS SURVEYOR COULD FIND NO EVIDENCE AND/OR REFERENCES THAT THERE EXISTS AN UPDATED AND/OR STAND-ALONE SURVEY SHOWING THE SUBDIVISION OF THE SUBJECT PROPERTY INTO THE SAID SECTION.
   - THIS SURVEYOR SUGGEST THAT A THOROUGH TITLE EXAMINATION BE CONDUCTED.

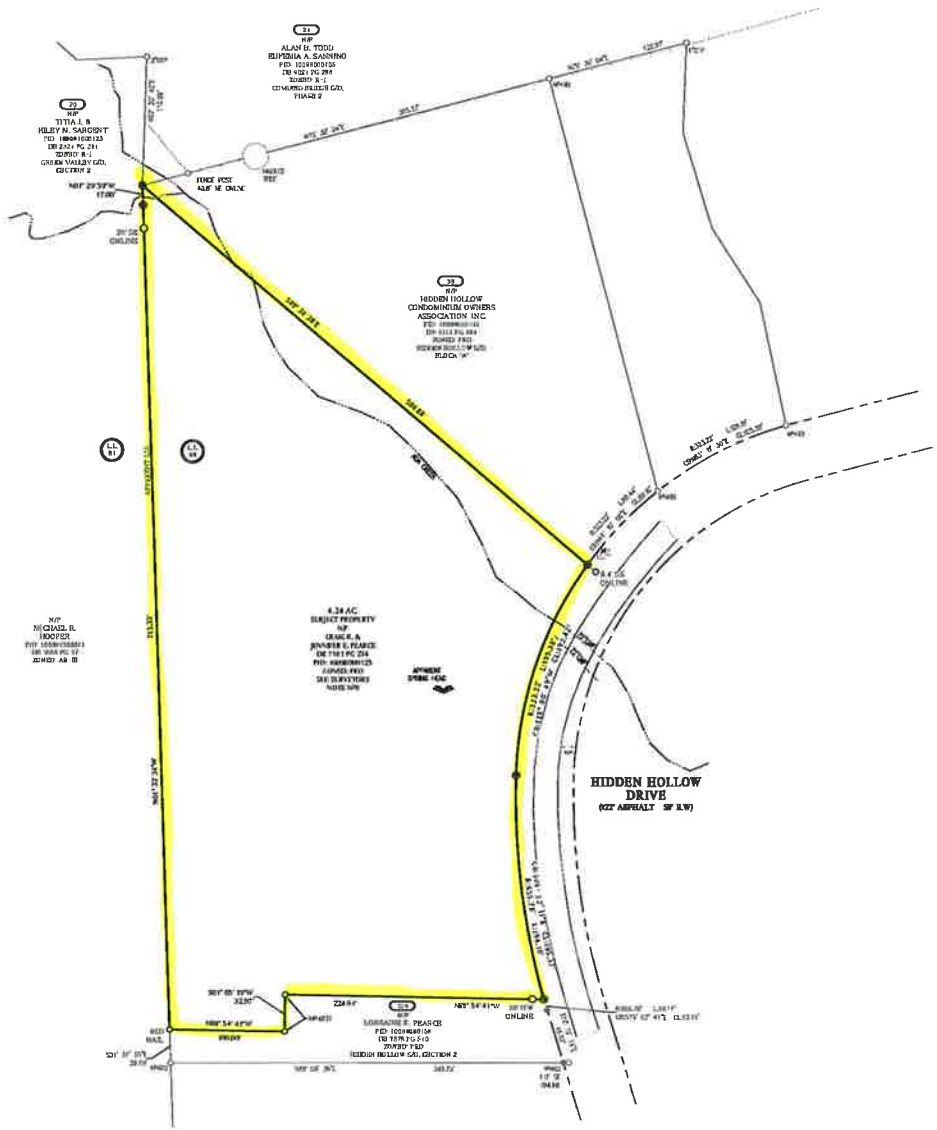
21
HP
ALAN B. TODD
EUPHEMIA A. SANNINO
PID: 10098100155
DB 9021 PG 291
ZONED: R-1
CO-MINGLED (FLOOD) GD,
THREAD 2
20
HP
TITTA J. &
RILEY N. SARGENT
PID: 10098100120
DB 8421 PG 291
ZONED: R-1
GREEN VALLEY GD,
EXCTION 2
FENCE POST
ABS' NE ONLY
NOT IN USE
ONLINE
33
HP
HIDDEN HOLLOW
CONDOMINIUM OWNERS
ASSOCIATION INC.
PID: 10098100133
DB 1111 PG 184
ZONED: PRD
HIDDEN HOLLOW SUBD PH 1
BLOCK "A"
NFP
NICHOLAS R.
HOOPER
PID: 10098100111
DB 1444 PG 57
ZONED: AR-III
4.24 AC.
SUBJECT PROPERTY
N/F
CRAIG A.
JENNIFER E. PEARCE
DB 7161 PG 254
PID: 10098100125
ZONED: PRD
SEE SURVEYORS
NOTES NPE
APPROX.
STONE HDC
HIDDEN HOLLOW
DRIVE
(27' ASPHALT - 50' R/W)
N01° 54' 41"W
224.91'
S01° 54' 41"E
340.22'
S01° 05' 57"W
312.50'
S88° 54' 41"E
LORRAINE R. PEARCE
PID: 10098100134
DB 7378 PG 310
ZONED: PRD
HIDDEN HOLLOW SUB, EXCTION 2
ONLINE
ROD
NAIL
S01° 05' 57"W
28.50'
N01° 05' 57"E
28.50'
N88° 54' 41"W
340.22'
N88° 54' 41"W
345.22'
ONLINE
ONLINE
ONLINE

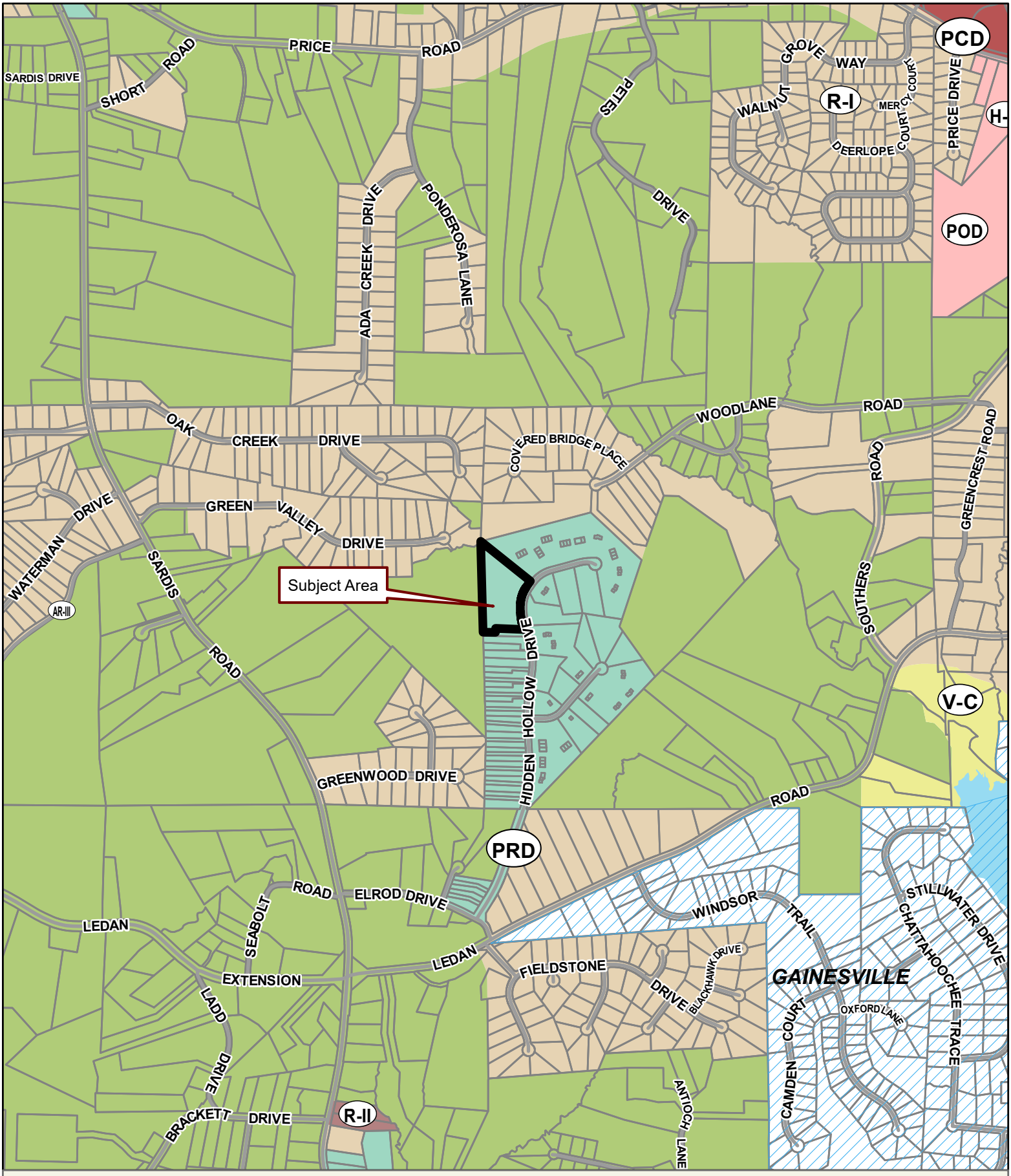

Applicant: BOURDUA REI, LLC / BRIAN BOURDUA
Tax Parcel #: 10098 000125
Location: 4033 HIDDEN HOLLOW DRIVE, GAINESVILLE, GA 30506
Commission District 2 **PC Mtg. Date:** 06/05/2023

0 300 600 1,200
Feet

Zoning Boundary
City Limits
Subject Area
Structure

N

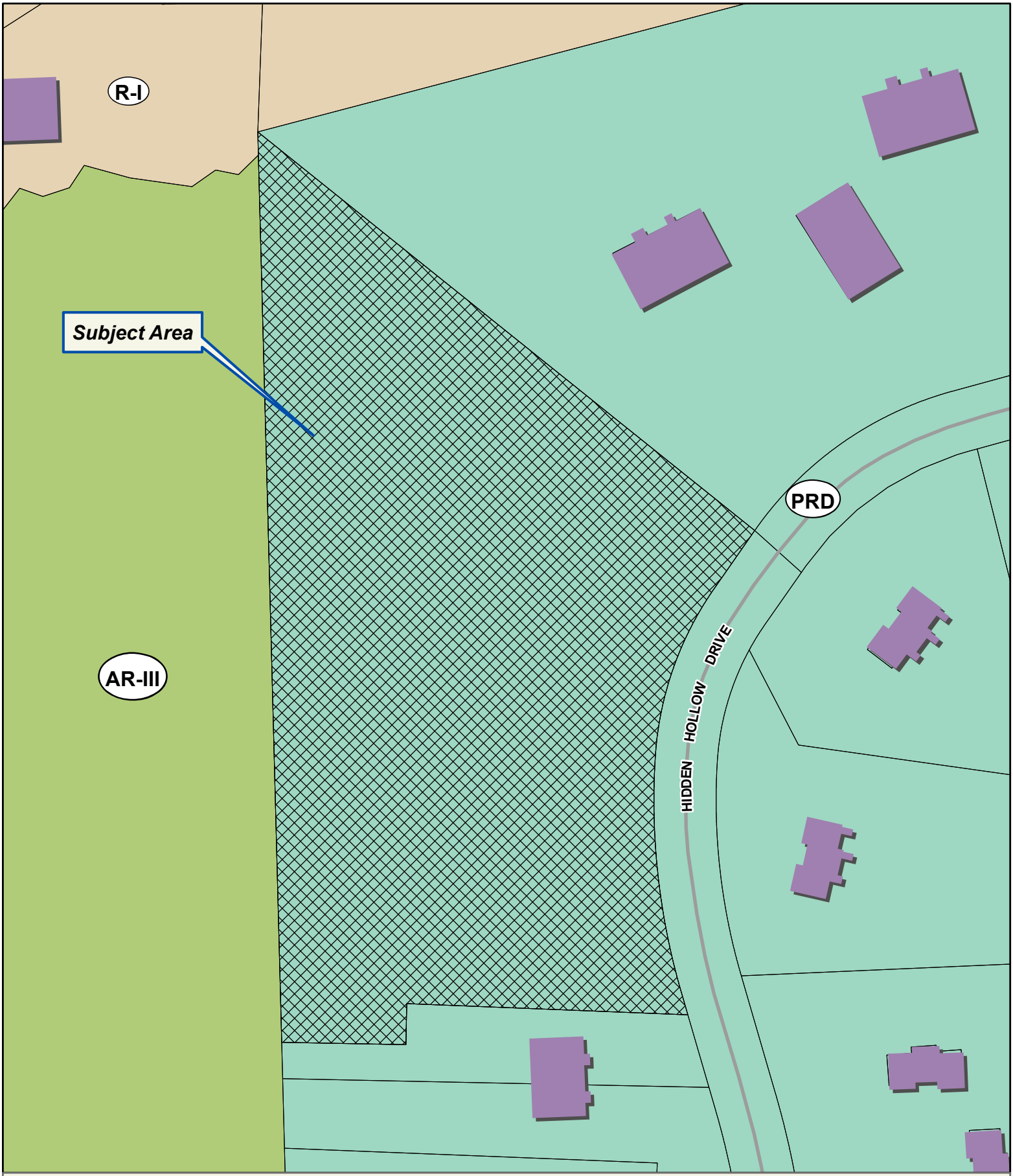

Applicant: BOURDUA REI, LLC / BRIAN BOURDUA
Tax Parcel #: 10098 000125
Location: 4033 HIDDEN HOLLOW DRIVE, GAINESVILLE, GA 30506
Commission District 2 **PC Mtg. Date:** 06/05/2023

0 25 50 100
Feet

Zoning Boundary
City Limits
Subject Area
Structure

N

Applicant: BOURDUA REI, LLC / BRIAN BOURDUA
Tax Parcel #: 10098 000125
Location: 4033 HIDDEN HOLLOW DRIVE, GAINESVILLE, GA 30506
Commission District 2 **PC Mtg. Date:** 06/05/2023

0 25 50 100
Feet

Zoning Boundary
City Limits
Subject Area

N

Epic Experience The Explorer 30CEE28563BH by Clayton Built - Showcase Homes Direct

Visit

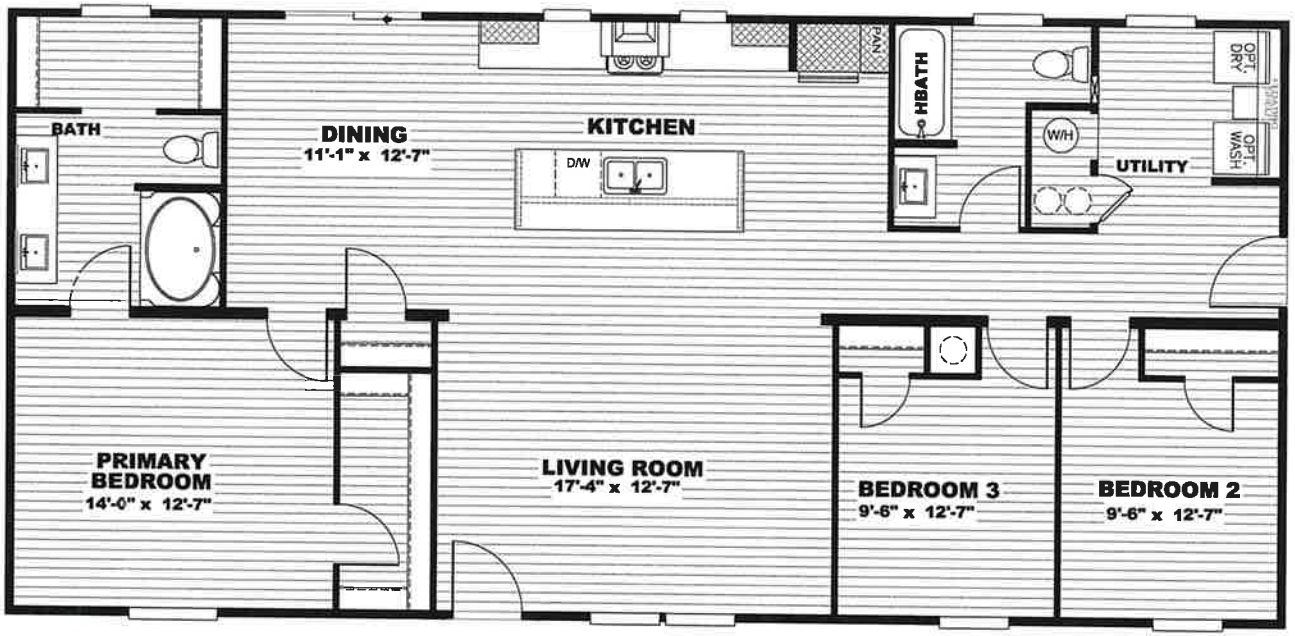

MODEL #CEE28563BH
DRAWING # CE-M025-56-3
28'X56' EXPLORER

*SCALE: 3/16"=1'-0"

submitted at the 6-5-23 PC meeting

Submitted at the 6-5-2023 PC Meeting

Submitted at the 6-5-2023 PC Meeting

Submitted at the 6-5-2023 PC Meeting

230270
Russell C Petersen, LLC
P.O. Box 6499
GAINESVILLE, GA 30504

LIMITED WARRANTY DEED

STATE OF GEORGIA
COUNTY OF HALL

THIS INDENTURE made **April 12th, 2023**, between **CRAIG R. PEARCE, JENNIFER E. PEARCE A/K/A JENNIFER L. PEARCE**, of the State of Georgia, as party or parties of the first part, hereinafter called Grantor, and **BOURDUA REI, LLC**, as party or parties of the second part, hereinafter called Grantee (the words "Grantor" and "Grantee" to include their respective heirs, successors and assigns where the context requires or permits).

W I T N E S S E T H that: Grantor, for and in consideration of the sum of TEN AND 00/100 ($10.00) Dollars and other good and valuable considerations in hand paid at and before the sealing and delivery of these presents, the receipt whereof is hereby acknowledged, has granted, bargained, sold, aliened, conveyed and confirmed, and by these presents does grant, bargain, sell, alien, convey and confirm unto the said Grantee, the following described property, together with all improvements located thereon, to wit:

SEE EXHIBIT "A" ATTACHED HERETO AND MADE A PART HEREOF BY REFERENCE.

TO HAVE AND TO HOLD the said tract or parcel of land, with all and singular the rights, members and appurtenances thereof, to the same being, belonging, or in anywise appertaining, to the only proper use, benefit and behoof of the said Grantee forever in **FEE SIMPLE**.

AND THE SAID Grantor will warrant and forever defend the right and title to the above described property unto the said Grantee against the claims of all persons by, through and under the above named grantor.

IN WITNESS WHEREOF, Grantor has hereunto set grantor's hand and seal this day and year first above written.

Signed, sealed and delivered in the presence of:

Witness

Notary Public

RUSSELL PETERSEN
Notary Public, Georgia
Hall County
My Commission Expires
March 11, 2026

(Seal)
CRAIG R. PEARCE

(Seal)
JENNIFER E. PEARCE
A/K/A JENNIFER L. PEARCE

EXHIBIT "A"

All that tract or parcel of land lying and being in Land Lot 98 of the 10th District, Hall County Georgia records, said parcel being more particularly described as follows:

To find the True Point of Beginning, proceed North 02 degrees 22 minutes 56 seconds East a distance of 556.52 feet from the intersecting centerlines of Hidden Hollow Drive and Hollow Terrace to the True Point of Beginning on Hidden Hollow Drive.

From the True Point of Beginning, leave Hidden Hollow Drive and proceed North 87 degrees 39 minutes 43 seconds West a distance of 68.43 feet to an iron pin found; proceed thence North 02 degrees 20 minutes 17 seconds East a distance of 45 feet to an iron pin found; proceed thence North 87 degrees 39 minutes 43 seconds West a distance of 300 feet to an iron pin found on the westerly boundary of Land Lot 98; proceed thence along the westerly boundary line of Land Lot 98 North 00 degrees 16 minutes 57 seconds West a distance of 815.71 feet to an iron pin found; leaving said Land Lot line proceed thence South 48 degrees 15 minutes 38 seconds East a distance of 514.46 feet to an iron pin found on Hidden Hollow Drive; proceed thence along Hidden Hollow Drive the following courses: a curve to the left with an arc distance of 82.07 feet said arc being subtended by a chord with a radius of 614. 57 feet, with a bearing of South 33 degrees 25 minutes 27 seconds West a chord distance of 82.01 feet; continue thence along a curve to the left with an arc distance of 99.93 feet with a radius of 253.98 feet, said arc being subtended by a chord with a bearing of South 15 degrees 49 minutes 29 seconds West and a chord length of 99.29 feet; continue thence along a curve to the left with an arc distance of 239.24 feet, a radius of 659.16 feet, said arc being subtended by a chord with a bearing of South 07 degrees 07 minutes 53 seconds East and a chord distance of 237.93 feet; continue thence South 14 degrees 09 minute 30 seconds East a distance of 89.48 feet, continuing thence along a curve to the right an arc distance of 46.94 feet with a radius of 697.63 feet, said arc being subtended by a chord with a bearing of South 08 degrees 53 minutes 35 seconds East and a distance of 46.93 feet which is the True Point of Beginning.

Said tract consists of 5.187 Acres according to that certain Survey for Bill Pearce and Craig Pearce by Farley-Collins-Whidden Associates dated May 14, 2008.

LESS AND EXCEPT:

All that tract or parcel of land lying and being in Land Lot 98, 10th District, Hall County, Georgia, containing 0.916 acres, more or less, as shown on a Retracement /Final Asbuilt Survey for Gwendolyn O. Earnhart, prepared by Chris M. Patton, GRLS No 2017, Dated 05/13/2014, recorded in Plat Book 868, Page 106, Hall County, Superior Court Records. Said Plat being incorporated herein by reference thereto.

Anael Dominguez (CDI: Planning)

From: Emily McGahee (Environmental Health)
Sent: Wednesday, May 17, 2023 12:41 PM
To: Anael Dominguez (CDI: Planning); Randi Doveton (CDI: Planning)
Cc: Kelly Hairston (Environmental Health); Chad Harper (Environmental Health)
Subject: HCPC Tentative Agenda 6.5.23

Please find Environmental Health comments below:

Item 1, 3621 Reece Circle, Whitlow: Must meet all Environmental Health residential septic system permitting requirements.

Items 2A/B, 3263 Tanners Mill Road, Dunagan: A detailed business plan must be submitted to Hall County Environmental Health for review. Additional items septic system modification/expansion may be required after review of business plan. Tourist Accommodation permit/plan review and/or Food Service permit/plan review may be required after review of business plan.

Items 3A/B/C, 4375 Peckerwood Road, Gregory: A detailed business plan must be submitted to Hall County Environmental Health for review. Additional items septic system modification/expansion may be required after review of business plan. Food Service permit/plan will be required.

Item 4, 4033 Hidden Hollow Drive: Must meet all Environmental Health residential septic system permitting requirements. A copy of recorded plat showing property in current configuration must be submitted at time of permit application.

Item 5, 5800 Lanier Islands Pkwy: Must meet all Environmental Health commercial septic system permitting requirements. A detailed business plan must be submitted to Hall County Environmental Health for review.

Item 6, Deaton Creek Pkwy, Public Works: No comment

Item 7, Code Amendment: No comment

Emily McGahee
Hall County Environmental Health
Hall County Government Center
2875 Browns Bridge Road
Mailing: PO Box 5901
Gainesville, GA 30504
(770) 531-3973
(770) 531-6767 (fax)

http://dph.georgia.gov/environmental-health (State Website)
http://www.phdistrict2.org/HallCounty.htm (District Website)
http://www.hallcounty.org/devserv/environmental.asp (County Website & Forms)

Anael Dominguez (CDI: Planning)

From: Peevy, Jonathan <jpeevy@dot.ga.gov>
Sent: Thursday, May 11, 2023 4:33 PM
To: Anael Dominguez (CDI: Planning)
Cc: Niebauer, Parker J
Subject: RE: Tentative Planning Agenda for June 5, 20223

CAUTION: This email originated from outside of the organization. Do not click links or open attachments unless you recognize the sender and know the content is safe.

Anael,
The following will require GDOT coordination.

- 3263 Tanners Mill Road
- 5800 Lanier Islands Parkway

Thank you,

Jonathan Peevy, P.E.
Assistant District Traffic Engineer

Georgia Department of Transportation

District 1 Traffic Operations
1475 Jesse Jewell Pkwy
Suite 100
Gainesville, GA, 30501
770.533.8276 office

From: Anael Dominguez (CDI: Planning) <adominguez@hallcounty.org>
Sent: Thursday, May 11, 2023 2:27 PM
Subject: Tentative Planning Agenda for June 5, 20223

Good afternoon –

Here is the Tentative Agenda and Maps for the **Monday, June 5, 2023** Hall County Planning Commission Meeting.

Please use the links to review the documents and respond with comments to Hall County Planning and Development. Failure to provide comments in a timely manner may result in the information not being included in the staff report.

When submitting comments, please include the name of the applicant along with the address of the property with the corresponding comment.

Comments are due by **Thursday, May 18th.** Email comments to Randi (rdoveton@hallcounty.org) and Ana (adominguez@hallcounty.org).

CALL TO ORDER

AGENDA REVIEW

APPROVAL OF MINUTES – May 15, 2023

NEW BUSINESS

1. **3621 Reece Circle** | appeal an administrative decision for a hardship manufactured home, as it relates to §17.350.110 on a 1.01± acre tract located on the south side of Reece Circle at its intersection with A L Mangum Road | Zoned R-II; Tax Parcel 15014 000056A | **Proposed use: hardship mobile home** | * Commission District 3 | **Henry Whitlow, applicant.**

2. (A) **3263 Tanners Mill Road | Use Subject to County Commission Approval |** on a 37.28± acre tract located on the east side of Tanners Mill Road approximately 756 feet from its intersection with Weaver Road | Zoned AR-IV; Tax 15025 000002 **| Proposed use: agri-entertainment venue |** **Commission District 1 | **Paden M. Dunagan, applicant.**

   (B) **3263 Tanners Mill Road | Variance |** to allow for outside amplification of voice, music and/or instruments except during a wedding ceremony on a 37.28± acre tract located on the east side of Tanners Mill Road approximately 756 feet from its intersection with Weaver Road | Zoned AR-IV; Tax 15025 000002 **| Proposed use: agri-entertainment venue |** **Commission District 1 | **Paden M. Dunagan, applicant.**

3. (A) **4375 Peckerwood Road | Rezone |** from Residential-I-Low Density (R-I-L) to Agricultural Residential-III (AR-III) on a 5.21± acre tract located on the east side of Peckerwood Road approximately 1,720 feet from its intersection with Gillsville Highway | Zoned R-I-L; Tax Parcel 15003 000136 **| Proposed use: permitted uses in AR-III |** **Commission District 3 | **Carlos & Tara Gregory, applicants.**

   (B) **4375 Peckerwood Road | Use Subject to Planning Commission Approval |** on a 5.21± acre tract located on the east side of Peckerwood Road approximately 1,720 feet from its intersection with Gillsville Highway | Zoned R-I-L; Tax Parcel 15003 000136 **| Proposed use: residential business |** *Commission District 3 **| Carlos & Tara Gregory, applicants.**

   (C) **4375 Peckerwood Road | Variance |** from residential business conditions on a 5.21± acre tract located on the east side of Peckerwood Road approximately 1,720 feet from its intersection with Gillsville Highway | Zoned R-I-L; Tax Parcel 15003 000136 **| Proposed use: residential business |** *Commission District 3 **| Carlos & Tara Gregory, applicants.**

4. **4033 Hidden Hollow Drive | Rezone |** from Planned Residential Development (PRD) to Agricultural-Residential-III (AR-III) on a 4.36± acre tract located on the west side of Hidden Hollow Drive approximately 718 feet from its intersection with Hidden Hollow Terrace | Zoned PRD; Tax Parcel 10098 000125 **| Proposed use: permitted uses in AR-III |** ** Commission District 2 **| Bourdua REI, LLC/Brian Bourdua, applicant.**

5. **5800 Lanier Islands Parkway | Rezone |** from Planned Commercial Development (PCD) Conditional to Planned Commercial Development (PCD) to amend existing conditions on a 3.57± acre tract located on the south side of Lanier Islands Parkway at its intersection with Beards Road | Zoned PCD; Tax Parcel 07329 004012 **| Proposed use: vehicle sales and construction equipment rental & sales |** ** Commission District 2 **| Vacutek, LLC, applicant.**

6. **Deaton Creek Parkway | Change a Segment of a Road Name** | on the official Hall County road map from Deaton Creek Parkway to Deaton Way; being a ±0.096 mile section between Friendship Road and Thompsons Mill Road | ** Commission District 1 | **Hall County Public Works Staff, applicant.**

7. Public Hearing to Amend Title 17 of the Official Code of Hall County, Georgia, to comply with O.C.G.A. §§ 36-66-1 through 36-66-6, commonly known as the Zoning Procedures Law, as amended by the adoption of HB 1405; to repeal conflicting ordinances and resolutions; and for other purposes. ** | **Hall County Planning Staff, applicant.**
   - **Pending Documents**

*The Planning Commission's decision will be the final action taken unless appealed to the Board of Commissioners. To do so, file an application with the Planning Department within five working days of the Planning Commission's decision.

The Hall County Board of Commissioners will hear appeals at a public hearing Thursday, July 13, 2023 at 6:00 p.m. at the Hall County Government Center, 2nd Floor Meeting Room, 2875 Browns Bridge Road, Gainesville, Georgia.

**The Planning Commission's recommendation will be forwarded to the Board of Commissioners for final action at a public hearing on Thursday, July 13, 2023. The Board will meet at 6:00 p.m. at the Hall County Government Center, 2nd Floor Meeting Room, 2875 Browns Bridge Road, Gainesville, Georgia.

Thank you,
Ana Dominguez
Planning Commission Clerk
Hall County Community Development and Infrastructure

HALL COUNTY
GEORGIA

POST OFFICE DRAWER 1435
GAINESVILLE, GA 30503

t: 770.531.6800 | f: 770.531.3945

DIRECTOR
Srikanth Yamala

PUBLIC WORKS AND
UTILITIES DIRECTOR
Bill Nash, P.E.

Hall County Government

COMMUNITY DEVELOPMENT AND INFRASTRUCTURE
PUBLIC WORKS AND UTILITIES

M E M O R A N D U M

To: Randi Doveton, Director of Planning and Development

From: Bill Nash, Director of Public Works and Utilities

Date: May 18, 2023

Subject: June 5, 2023 - Hall County Planning Commission Agenda

Please be advised that our office has reviewed the Hall County Planning Commission agenda for the June 5, 2023 meeting. Upon review, we provide the following comments.

NEW BUSINESS

1. **3621 Reece Circle** | appeal an administrative decision for a hardship manufactured home, as it relates to §17.350.110 on a 1.01± acre tract located on the south side of Reece Circle at its intersection with A L Mangum Road | Zoned R-II; Tax Parcel 15014 000056A | **Proposed use: hardship mobile home** | * Commission District 3 | **Henry Whitlow, applicant.**

   a. **Engineering:** No Comment
   b. **Traffic:** No Comment
   c. **Utilities:** No Comment

2. (A) **3263 Tanners Mill Road | Use Subject to County Commission Approval |** on a 37.28± acre tract located on the east side of Tanners Mill Road approximately 756 feet from its intersection with Weaver Road | Zoned AR-IV; Tax 15025 000002 **| Proposed use: agri-entertainment venue |** **Commission District 1 | **Paden M. Dunagan, applicant.**

   a. **Engineering:** The site may require a stormwater management report should the site plan indicate the proposed development meets stormwater thresholds for impervious surfaces and/or disturbed acreage Show stream buffer and impervious setback from wrested vegetation not center line of stream
   Show stream buffer and impervious setback from wrested vegetation not center line of stream
   Proposed development is within 200' of state waters and will require a L.D.P.
   b. **Traffic:** No Comment
   c. **Utilities:** No Comment

3. (A) **4375 Peckerwood Road | Rezone |** from Residential-I-Low Density (R-I-L) to Agricultural Residential-III (AR-III) on a 5.21± acre tract located on the east side of Peckerwood Road approximately 1,720 feet from its intersection with Gillsville Highway | Zoned R-I-L; Tax Parcel 15003 000136 **| Proposed use: permitted uses in AR-III |** **Commission District 3 **| Carlos & Tara Gregory, applicants.**

a. **Engineering:** The site may require a stormwater management report should the site plan indicate the proposed development meets stormwater thresholds for impervious surfaces and/or disturbed acreage
b. **Traffic:** No comment
c. **Utilities:** Check with environment health if separate septic system will be required for food service.

4. **4033 Hidden Hollow Drive | Rezone |** from Planned Residential Development (PRD) to Agricultural-Residential-III (AR-III) on a 4.36± acre tract located on the west side of Hidden Hollow Drive approximately 718 feet from its intersection with Hidden Hollow Terrace | Zoned PRD; Tax Parcel 10098 000125 **| Proposed use: permitted uses in AR-III |** ** Commission District 2 | **Bourdua REI, LLC/Brian Bourdua, applicant.**

   a. **Engineering:** This property may have multiple streams and springheads as depilated on "plat for E.R.E. INC." any development on this property must show all stream buffers and flood zones.
   The site may require a stormwater management report should the site plan indicate the proposed development meets stormwater thresholds for impervious surfaces and/or disturbed acreage
   FEMA and Hall County studied Flood plains present on site.
   Show stream buffer and impervious setback from wrested vegetation not center line of stream
   b. **Traffic:** No Comment
   c. **Utilities:** Gainesville sewer district

5. **5800 Lanier Islands Parkway | Rezone |** from Planned Commercial Development (PCD) Conditional to Planned Commercial Development (PCD) to amend existing conditions on a 3.57± acre tract located on the south side of Lanier Islands Parkway at its intersection with Beards Road | Zoned PCD; Tax Parcel 07329 004012 **| Proposed use: vehicle sales and construction equipment rental & sales |** ** Commission District 2 **| Vacutek, LLC, applicant.**

   a. **Engineering:** The site may require a stormwater management report should the site plan indicate the proposed development meets stormwater thresholds for impervious surfaces and/or disturbed acreage Show stream buffer and impervious setback from wrested vegetation not center line of stream
   b. **Traffic:** GDOT permit required for access to Lanier Islands parkway.
   c. **Utilities:** City of Buford sewer district.

6. **Deaton Creek Parkway | Change a Segment of a Road Name |** on the official Hall County road map from Deaton Creek Parkway to Deaton Way; being a ±0.096 mile section between Friendship Road and Thompsons Mill Road | ** Commission District 1 | **Hall County Public Works Staff, applicant.**

   a. **Engineering:** No Comment
   b. **Traffic:** No Comment
   c. **Utilities:** No Comment.

Anael Dominguez (CDI: Planning)

From: John Hornick (Fire Services)
Sent: Tuesday, May 16, 2023 1:57 PM
To: Anael Dominguez (CDI: Planning)
Cc: Randi Doveton (CDI: Planning)
Subject: Fire Comment

Monday, June 5, 2023 Hall County Planning Commission Meeting.

1. **4033 Hidden Hollow Drive | Rezone |** from Planned Residential Development (PRD) to Agricultural-Residential-III (AR-III) on a 4.36± acre tract located on the west side of Hidden Hollow Drive approximately 718 feet from its intersection with Hidden Hollow Terrace | Zoned PRD; Tax Parcel 10098 000125 **| Proposed use: permitted uses in AR-III |** ** Commission District 2 **| Bourdua REI, LLC/Brian Bourdua, applicant.**
   The Hall County Fire Marshal's Office has no comments as proposed.

Regards,

John Hornick, NPQ Fire Service Plans Examiner 1
Lieutenant, Hall County Fire Rescue
Hall County Government
Main: 770-531-6838 | Cell: 404-597-0083
Website: www.Hallcounty.org

ZONING NOTICE
AN APPLICATION HAS BEEN FILED WITH HALL COUNTY IN REGARD TO THE ZONING REGULATIONS AS THEY APPLY TO THIS PROPERTY
APPLICANT: BOURDUA REI, LLC/BRIAN BOURDUA
REQUEST: REZONE FROM PRD TO AR-111
FOR PERMITTED USES IN AR-111
PUBLIC HEARINGS WILL BE HELD ON:
PLANNING COMMISSION
Date: JUNE 5, 2023
Time: 5:15 PM
&
COUNTY COMMISSION
Date: JULY 13, 2023
Time: 6:00 PM
HALL COUNTY GOVERNMENT CENTER, 2875 BROWNS BRIDGE ROAD, GAINESVILLE, GA
FOR MORE INFORMATION CALL: (770) 531-6809

ZONING NOTICE

AGENDA ITEM

Public Hearing to amend Hall County's Zoning Map as follows:

REPORT TO: **Work Session (07/10/23)**

REPORT TO: **Voting Meeting (07/13/23)**

ITEM NO: 358/2023

SUBJECT: **4375 Peckerwood Road | Rezone |** from Residential-I-Low Density (R-I-L) to Agricultural Residential-III (AR-III) on a 5.21± acre tract located on the east side of Peckerwood Road approximately 1,720 feet from its intersection with Gillsville Highway | Zoned R-I-L; Tax Parcel 15003 000136 **| Proposed use: permitted uses in AR-III |** Commission District 3 **| Carlos & Tara Gregory, applicants.**

Meetings:

Work Session Date: 07/10/23 **Voting Meeting Date:** 07/13/23

Executive Summary:

Presenter: RD

Recommendation:

Approval, with conditions:

1. The property shall be developed in accordance with the standards of the Agricultural-Residential-III (AR-III, 17.110) zoning district.

2. The following statement regarding the potential impacts of agricultural operations in the area shall be made a part of any plat recorded on the property: "Owners, occupants, and users of property shown on this plat are hereby informed of the impacts associated with normal farming practices which may take place on adjacent and nearby property including, but not limited to, noise, odors, dust, the operation of machinery of any kind, the storage and disposal of manure, and the application of fertilizers, herbicides, and pesticides. Therefore, owners, occupants, and users of the property shown on this plat should be prepared to expect the effects of such practices."

Purpose of Request:

4375 Peckerwood Road | Rezone | from Residential-I-Low Density (R-I-L) to Agricultural Residential-III (AR-III) on a 5.21± acre tract located on the east side of Peckerwood Road approximately 1,720 feet from its intersection with Gillsville Highway | Zoned R-I-L; Tax Parcel 15003 000136 **| Proposed use: permitted uses in AR-III |** Commission District 3 **| Carlos & Tara Gregory, applicants.**

History:

Facts and Issues:

Options:

Funding Requested $ 0.00

Are funds within current budget?	No
Source of Funds	
Does the action involve a Resolution, Ordinance, Contract, Agreement, etc.?	No
Has it been reviewed by the County Attorney?	Yes
Is there a deadline for this item?	

Approvals:

Submit	Approve	Attorney	Administration
AD	RD	WLI	CR
Clerk			
JR			

Attachments:

Board Memo
Recommendation Report
Application
Narrative
Site Plan
Maps
Deed
Environmental Health Comments
GDOT Comments
Public Works Comments
Fire Comments
Notice Sign Photos

HALL COUNTY
GEORGIA

POST OFFICE DRAWER 1435

GAINESVILLE, GA 30503

t: 770.531.6809 | f: 770.531.3902

DIRECTOR
Srikanth Yamala

PLANNING AND DEVELOPMENT
DIRECTOR
Randi Doveton

Hall County Government

COMMUNITY DEVELOPMENT AND INFRASTRUCTURE
PLANNING AND DEVELOPMENT

To: Richard Higgins, Chairman
Kathy Cooper, District 1 Commissioner
Billy Powell, District 2 Commissioner
Gregg Poole, District 3 Commissioner
Jeff Stowe, District 4 Commissioner

From: Randi Doveton, Director of Planning & Development

Date: June 19, 2023

Subject: **4375 Peckerwood Road | Rezone |** from Residential-I-Low Density (R-I-L) to Agricultural Residential-III (AR-III) on a 5.21± acre tract **| Proposed use: permitted uses in AR-III | Carlos & Tara Gregory, applicants.**

The request before you is the request of Carlos & Tara Gregory to rezone from Residential-I-Low Density (R-I-L) to Agricultural Residential-III (AR-III) to allow permitted uses in AR-III. This item is located within Commission District 3.

At their June 5, 2023 meeting, the Hall County Planning Commission voted to recommend approval with two (2) conditions **(3-0, Sosebee & Varner absent)**.

There were **no public comments submitted** in advance of the Planning Commission meeting and **no one spoke during the public hearing.**

There have been no changes to the request since the Planning Commission took action.

Planning Commission Approval Conditions:

1. The property shall be developed in accordance with the standards of the Agricultural-Residential-III (AR-III, 17.110) zoning district.
2. The following statement regarding the potential impacts of agricultural operations in the area shall be made a part of any plat recorded on the property:
   "Owners, occupants, and users of property shown on this plat are hereby informed of the impacts associated with normal farming practices which may take place on adjacent and nearby property including, but not limited to, noise, odors, dust, the operation of machinery of any kind, the storage and disposal of manure, and the application of fertilizers, herbicides, and pesticides. Therefore, owners, occupants, and users of the property shown on this plat should be prepared to expect the effects of such practices."

HALL COUNTY PLANNING COMMISSION
RECOMMENDATION REPORT

Applicant .....Carlos & Tara Gregory

Request .....(A) Rezone from Residential-I-Low Density (R-I-L, 17.70) to Agricultural-Residential-III (AR-III, 17.110)- **BOC Final Decision**
(B) Use Subject to Planning Commission Approval for a residential business - **PC ONLY**
(C) Variance from residential business conditions - **PC ONLY**

Proposed Use .....(A) Permitted uses in AR-III
(B) Residential business – **PC ONLY**
(C) Residential business - **PC ONLY**

Size ..... 5.21± acres

Zoning .....Current Residential I Low Density (Conditional) (R-I-L, 17.70) | Proposed Agricultural Residential III (AR-III, 17.110)

Location ..... **4375 Peckerwood Road** | Tax Parcel 15003 000136

Commission District ..... Three

Planning Commission Date ..... June 5, 2023

Staff Recommendation ..... **(A) Approval with conditions of the request to rezone the property to AR-III, BOC Final Decision**
(B) Approval with conditions of the residential business, and –PC ONLY
(C) Approval of the variances from the residential business conditions, as the proposed request is consistent with the Rural character area in the Comprehensive Plan. – PC ONLY

Planning Commission Recommendation..... (A) Approval, with conditions.
Vote: 3-0 (Sosebee & Varner absent)

Planning Commission Conditions:

1. The property shall be developed in accordance with the standards of the Agricultural-Residential-III (AR-III, 17.110) zoning district.
2. The following statement regarding the potential impacts of agricultural operations in the area shall be made a part of any plat recorded on the property:
   "Owners, occupants, and users of property shown on this plat are hereby informed of the impacts associated with normal farming practices which may take place on adjacent and nearby property including, but not limited to, noise, odors, dust, the operation of machinery of any kind, the storage and disposal of manure, and the application of fertilizers, herbicides, and pesticides. Therefore, owners, occupants, and users of the property shown on this plat should be prepared to expect the effects of such practices."

Public Forum:

There were no comments in support or opposition.

Summary Analysis

The applicant is requesting to (A) rezone the subject properties from Residential-I-Low Density (R-I-L, 17.70) to Agricultural Residential III (AR-III, 17.110) for uses permitted within the AR-III district. Concurrent to the rezoning request, the applicant is requesting (B) a use subject to Planning Commission approval for a residential business, and (C) variances from certain residential business conditions. Residential businesses are not an allowed use within the R-I-L district but are permitted with approval of the Planning Commission in the AR-III district.

The proposed residential business will be the base of operation for the applicant's mobile food service and catering business. The business operates offsite at fairs, parks catering sites, car dealerships and designated food truck spaces on approved city streets. The business primarily operates off-site on Saturday and Sunday during daylight hours.

The narrative explains that a portion of the detached garage will be used to clean and store the food concession trailer. In addition to the storage space, the garage will include a commercial grade kitchen, cleaning area, dry storage, prep table, and a refrigerator and freezer. All cooking of food will be done on the food concession trailer at each venue spot and no cooking shall be done at the residential business.

Cleaning and storage of the food concession trailer will occur after Saturday and Sunday events and during daylight hours. There are no excess noise, fumes, or other hazards that would endanger the health, safety or welfare of the neighborhood. Per the submitted narrative, most of the cleaning can be completed on the food concession trailer. As part of the cleaning process, the commercial kitchen is necessary to dispose of grey water and to clean grilling equipment.

Concurrent to the rezoning and conditional use request, the applicant is requesting relief from three (3) of the standards of a residential business (17.350.130) as outlined below:

- The occupation or profession must be conducted entirely within the dwelling.

    - Per the applicant's narrative, a commercial kitchen must be located in a separate building from the primary residence. Approximately 350 square feet of the existing 1800 square foot garage will be renovated for the commercial kitchen use.
- No outside storage or display shall be allowed.
    - Per the applicant's narrative, the food concession trailer will be stored on the right side of the detached garage, in an existing parking space. The location of the detached garage and parking space are located on the property in a location that is not easily visible from the street.
- The principal practitioner will be permitted to park one commercial vehicle in the approved parking area. The commercial vehicle is limited to a passenger car, a van or a light truck (up to one ton).
    - The food concession trailer does not meet this requirement.

Staff has identified the need for one (1) additional variance from the standards of a residential business (17.350.130) as outlined below:

- Days and hours of operation allowing access by the public, employees, customers or clients shall be Monday through Saturday, daylight hours only. No access by the public, customers or clients is permitted in the R-I district.
    - Per the applicant's narrative, the business primarily operates offsite on Saturday and Sunday during daylight hours.

Based on the future land-use plan, staff finds the *requested zoning designation consistent* with the future land use classification of Rural in the Comprehensive Plan.

Zoning Analysis

The proposed use of a single-family residence with associated accessory structures is consistent with the permitted uses within the Agricultural-Residential-III (AR-III, 17.110) zoning district. The conditional use of operating a residential business on the property requires Planning Commission approval. Residential businesses are defined as an occupation or profession conducted within a dwelling, and which is carried on by an occupant thereof and which is clearly incidental and secondary to the use of the dwelling for residential dwelling purposes (17.20.920), subject to the requirements of 17.350.130.

(A) Rezone from Residential I Low Density (R-I-L, 17.70) to Agricultural Residential III (AR-III, 17.110)

When considering a zoning amendment to the zoning maps, the following items must be considered:

1. Whether the zoning proposal will permit a use that is suitable in view of the use and development of adjacent and nearby property; **Yes, the proposed use is suitable in view of the use and development of adjacent and nearby property.**

2. Whether the zoning proposal will adversely affect the existing use or usability of adjacent or nearby property; **The zoning proposal should not adversely affect the existing use or usability of adjacent or nearby properties.**

3. Whether the property to be affected by the zoning proposal has reasonable economic use as currently zoned. **The subject property is zoned Residential-I-Low Density (R-I-L, 17.70) . Within the R-I-L district residential businesses are not a permitted use. The applicant would not be able to use their primary residence as a base of operation for their mobile food service business.**

4. Whether the zoning proposal will result in a use which will or could cause an excessive or burdensome use of existing streets, transportation facilities, or utilities; **No, the proposed use should not cause an excessive or burdensome use of existing streets, transportation facilities, or utilities.**

5. Whether the zoning proposal is in conformity with the policy and intent of the land use plan; **Yes, the requested zoning designation is consistent with the future land use classification of Rural in the Comprehensive Plan.**

6. The extent to which property values are diminished by the existing zoning restrictions; **Staff has not identified that the existing property values have been impacted by the existing zoning.**

7. The extent to which the destruction of the subject property's value under the existing zoning promotes the health, safety, morals or general welfare of the public; **Staff is unable to comment on the impact of property values without a full market analysis. Multiple factors impact property value including construction types, proposed uses, and maintenance. Often it is difficult to determine the effect of a development on adjacent properties until the development is completed.**

8. The relative gain to the public as compared to the hardship imposed upon the individual property owner; **Staff has not identified a hardship imposed on the property owner as the property is currently zoned.**

9. The length of time the property has been vacant as zoned considered in the context of land development in the area in the vicinity of the property; **Hall County aerial imagery shows a residence and detached garage on the property as far back as the early 2000's.**

10. Whether there are other existing or changing conditions affecting the use or development of the property which give supporting grounds for either approval or disapproval of the zoning proposal; **There are no known changing conditions affecting the use or development of the property.**

11. Whether the change would create an isolated district unrelated to the surrounding districts; **Adjacent properties are zoned Residential-I-Low Density (R-I-L, 17.70) and Agricultural-Residential-IV (AR-IV, 17.120).**

12. Whether the present zoning district boundaries are illogically drawn in relation to existing conditions in the area; **There is no evidence that the present zoning district boundaries are illogically drawn.**

13. Whether the change requested is out of scale with the needs of the county as a whole or the immediate neighborhood; **The proposed use is not out of scale with the needs of the county as a whole. Home-based businesses play an important role in a community.**

14. Whether it is impossible to find adequate sites for the proposed use in districts permitting such use and already appropriately zoned; **Residential businesses require Planning Commission approval in all districts in which they are included.**

15. Whether the need for rezoning could be handled instead by a variance request to the [Planning Commission]; **No, the request could not be handled alternatively as a variance as the requested use is not permitted within the Residential-I-Low Density (R-I-L, 17.70).**

16. Whether there would be an ecological or pollution impact resulting from major modifications to the land if the request is granted; **There are no significant changes proposed to the site. The commercial kitchen improvements will likely require a building permit and inspections.**

17. Whether there is reasonable evidence based upon existing and anticipated land use that would indicate a mistake was made in the original zoning of the property; **There is no evidence to indicate a mistake was made in the original zoning of the property.**

(B) Use Subject to Planning Commission Approval for a residential business Conditional Use

Per 17.350.130, residential businesses are designed to be less restrictive than a home occupation but more restrictive than a rural business in regard to access by the public, size, visibility, number of employees and types of business. Residential businesses shall be subject to the conditions set forth below. The applicant shall bear the burden of providing conclusive evidence to the planning commission that these conditions have been met. The planning commission may modify the conditions listed below to be more restrictive or place additional conditions, which may also be more restrictive than the conditions listed below, on any approval granted the applicant. If the residential business is approved, the applicant is responsible for the operation of the said residential business in conformance with these conditions. The applicant shall submit a written description of the proposed business demonstrating that the proposed business will comply with each of the conditions listed below. Additionally, the applicant will submit a floor plan showing the dimensions of the residence and showing the area with dimensions to be involved in the business.

1. Residential businesses may include but are not limited to beauty shops, barber shops, professional offices and minor repair services. In R-I, the use is restricted to those uses where no customers/clients are coming to the site.
    - **The proposed use of a mobile food service is not explicitly listed, but it is compatible with the intent of the residential business use.**

2. Residential businesses shall not include the repair and/or maintenance of motor vehicles, large scale manufacturing or any use which will create noise, noxious odors or any hazard that may endanger the health, safety or welfare of the neighborhood.
    - **Per the applicant's narrative, the residential business will not include any use that will create noise, noxious odors, or any hazard that may endanger the health, safety, or welfare of the neighborhood.**

3. The residential business shall not involve group instruction or group assembly of people on the premises.
    - **The proposed residential business meets this requirement.**

4. The occupation or profession must be conducted entirely within the dwelling.
    - **The applicant is proposing to operate the residential business from a detached garage and has requested relief from this standard via a concurrent variance request.**

5. The dwelling must be the bona fide residence of the principal practitioner and the residential business shall be valid only as long as the original principal practitioner resides in the dwelling, is conducting the business and has a current business license.
    - **The applicant resides on the subject property.**

6. Residential businesses shall be limited to no more than 35 percent of the total heated floor area of the residence. The proposed size of the residential business shall be specified at the time of application.
    - **The proposed residential business meets this requirement.**

7. Any additions or alterations to the residence which will be used for the residential business must be of an architectural style in keeping with the surrounding residential and agricultural development.
    - **There are no proposed modifications to the garage which would indicate that it is being used for a residential business.**

8. The portion of the residence in which the business is conducted shall be completely enclosed in a manner that the business is not visible from the surrounding property.
    - **If approved, the residential business will operate from inside the detached garage.**

9. Only one employee in excess of family members residing on the premises shall be permitted. For uses where no customers/clients are coming to the site, the number of employees permitted at any one time may be increased to three.
    - **The applicant has not detailed whether employees will work out of the residential business.**

10. Property on which the residential business is proposed must have frontage on a public road.
    - **The proposed residential business meets this requirement.**

11. Parking for customers/clients must be provided on site as provided in chapter 17.300 [17.250]; location of the parking is to be approved by the planning commission.
    - **The application materials do not explicitly address this requirement, but it is not anticipated that customers or clients visit the property.**

12. Only one non-illuminated sign not to exceed one square foot is permitted; the location is to be approved by the planning commission. No sign is permitted in the R-I zone.
    - **The application materials do not explicitly address this requirement, but any signage will have to meet this requirement.**

13. No outside storage or display shall be allowed.
    - **The food concession trailer will be parked outside, adjacent to the detached garage. The applicant has requested relief from this standard via a concurrent variance request.**

14. Days and hours of operation allowing access by the public, employees, customers or clients shall be Monday through Saturday, daylight hours only. No access by the public, customers or clients is permitted in the R-I district.
    - **The applicant is proposing to operate primarily on Saturday and Sunday during daylight hours.**

15. No more than one home occupation, residential business or rural business is allowed in a residence at one time.
    - **This requirement is met. There are no other home occupations, residential businesses, or rural business operating on the property.**

16. The principal practitioner will be permitted to park one commercial vehicle in the approved parking area. The commercial vehicle is limited to a passenger car, a van or a light truck (up to one ton).
    - **The food concession trailer does not meet this standard and the applicant has requested relief via a concurrent variance.**

17. Any utility trailer needed for the orderly operation of the business must be specifically requested and approved by the planning commission. The request must include the proposed use and size of the trailer.
    - **No utility trailer is being requested as part of this application.**

18. The planning commission may place any reasonable conditions on the application deemed necessary to insure the orderly operation of the proposed business and its compatibility with the surrounding properties.

19. Pickups from and deliveries to the site in regard to the business shall be restricted to vehicles having no more than two axles and shall be restricted to no more than two pickups or deliveries per day. The pickups and deliveries are restricted to daylight hours only.
    - **The applicant has not indicated that deliveries will be taking place related to the residential business.**

(C) Variance from residential business conditions:

The Planning Commission is hereby authorized to grant variances from the strict application of this Resolution upon proof by a preponderance of the evidence that 2.60.030.J provided the request meets the criteria set forth in 2.60.030.K.

1. There are extraordinary and exceptional conditions pertaining to the particular lot in question because of its size, shape or topography (the hardship must relate to the physical character of the lot and not to a personal or economic hardship); **There does not appear to be extraordinary or exceptional conditions pertaining to the subject property. Instead, the need for a variance is necessitated by the proposed business and state health code requirements for commercial kitchens.**

2. The application of the requirements of this Title 17 to this particular piece of property would create an unusual hardship; **The applicant would not be able to use the subject property as a base of operation for their mobile foodservice business.**

3. Such conditions are peculiar to the particular piece of property involved and are not common to other properties in the neighborhood; **No, the conditions are not peculiar to the subject parcel but the result of the proposed use of the property.**

4. Such conditions are not the result of any actions of the property owner; **The site development has been proposed by the applicant.**

5. Relief, if granted, would not cause substantial detriment to the public good or impair the purposes and intent of Title 17; provided, however, that no variance may be granted for a use of land or building or structure that is prohibited by Title 17 or for a conditional use which has been denied by the county planning commission. **Relief, if granted, would not cause substantial detriment to the public good or impair the purposes and intent of Title 17.**

17.380.050. - Submission requirements for a rezoning request

A. Any person or persons requesting a change in the official zoning map or use subject to approval of the county commission shall file an application with a plat or map of the property attached thereto, together with payment of such fees set forth in chapter 17.30 to cover administrative and advertising costs, in the planning department office. Such person or persons or their authorized agent shall appear in person at the public hearing held to consider the district change. **Proposal meets the requirement. Applicant has paid the appropriate fees and understands that someone must be present at both the Hall County Planning Commission meeting and the voting meeting of the Hall County Board of Commissioners.**

B. All applications for a change of zoning classification or use subject to approval of the county commission shall include:

1. A narrative statement identifying the existing and proposed use of the property and addressing each of the criteria set forth in section 17.380.060.C of this section [chapter]. **The applicant has submitted a narrative and site plan but did not specifically address the criteria listed in 17.380.060.C.**

2. A site plan drawn to scale designating the area covered by the application and identifying existing and proposed buildings and uses, adjacent existing land uses, zoning on contiguous parcels, including those across an abutting public right-of-way, and any other significant site improvements proposed to accommodate the proposed use or buffer adjacent uses, etc., or a plat of the subject property where no specific land use is proposed. In cases where only a plat or map is provided and no land use is proposed, the planning commission and county commission shall evaluate the application based on the most intense possible land use permitted in the proposed district**. The submitted site plan is hand drawn and not to scale, but does show the approximate locations of the proposed residences and accessory structures on the site.**

C. For any application for a slow rate land treatment system (see chapter 17.20), the following additional requirements apply. **This standard is not applicable as the site will be served by an onsite septic system.**

D. For any application proposing the development of 100 or more residential dwelling units, a traffic impact study shall be submitted prior to consideration of the application by the planning commission. At the applicant's expense, the traffic impact study shall be prepared by a professional engineer in accordance with requirements established by the Hall County Engineering Department. The engineering department shall review the traffic impact study and forward any comments to the Hall County Planning Commission. **As there are not 100 or more residential dwelling units proposed this question is not applicable.**

Development Support and Constraints – Departmental / Agency Comments

Hall County Environmental Health

In an email dated May 17, 2023, Emily McGahee states “A detailed business plan must be submitted to Hall County Environmental Health for review. Additional items septic system modification/expansion may be required after review of business plan. Food Service permit/plan will be required.”

Hall County Fire Marshal

In an email dated May 16, 2023, John Hornick, NPQ Fire Inspector 1, Plans Review Lieutenant stated “The

Hall County Fire Marshal's Office has no comments as proposed."

Hall County Public Works and Utilities
In a memo dated May 18, 2023, Bill Nash, Director of Public Works and Utilities, provided the following comments:

Engineering:
The site may require a stormwater management report should the site plan indicate the proposed development meets stormwater thresholds for impervious surfaces and/or disturbed acreage

Traffic:
No comment.

Utilities
Check with environmental health if separate septic system will be required for food service.

Georgia Department of Transportation
In an email dated May 11, 2023, Jonathan Peevy, Assistant District Traffic Engineer, confirmed this project will not require GDOT coordination.

- **Excerpts from the minutes of the June 5, 2023 meeting**

Applicant's Presentation:

Randi Doveton, Planning Director, presented a summary of the request.

Tara Gregory, 4375 Peckerwood Road, Gillsville, presented the request. The applicant stated that they are requesting to convert their existing garage structure into a home base of operation and commercial kitchen. The applicant stated that she is also requesting to park the food trailer on the property without altering the land or additional signage.

Public Forum:

There were no comments in support or opposition.

Planning Commission Comments:

Mr. Braswell wanted clarification that the applicants were not going to have functions for the business on the property. The applicant stated that was correct.

Motion: A motion to approve, with conditions was made by Mr. Hunt and seconded by Ms. Pilcher. Vote: 3-0 (Sosebee & Varner absent)

Conditions:

1. The property shall be developed in accordance with the standards of the Agricultural-Residential-III (AR-III, 17.110) zoning district.
2. The following statement regarding the potential impacts of agricultural operations in the area shall be made a part of any plat recorded on the property:
   "Owners, occupants, and users of property shown on this plat are hereby informed of the impacts associated with normal farming practices which may take place on adjacent and nearby property including, but not limited to, noise, odors, dust, the operation of machinery of any kind, the storage and disposal of manure, and the application of fertilizers, herbicides, and pesticides. Therefore, owners, occupants, and users of the property shown on this plat should be prepared to expect the effects of such practices."

HZON23-

PLANNING AND DEVELOPMENT DEPARTMENT
2875 BROWNS BRIDGE ROAD, GAINESVILLE, GA, 30504
MAILING ADDRESS: PO BOX 1435, GAINESVILLE, GA 30503
t: 770-531-6809 | f: 770-531-3902

HALL COUNTY
We have it all in Hall

ZONING APPLICATION

Applicant (Name & Mailing Address)

Tara and Carlos Gregory
4375 Peckerwood Rd
Gillsville GA 30543

Phone 610-563-4881

Email Address ctgregory99@gmail.com

Property Owner (Name & Mailing Address)

Same as Applicant

Phone

Email Address

Proposed Use Home base of operation for food catering business

Contact Person (Name & Mailing Address)

Tara and Carlos Gregory
4375 Peckerwood Rd
Gillsville GA 30543

Phone 610-563-4881

Email Address ctgregory99@gmail.com

Status of Applicant

- ☒ Owner
- ☐ Option to Purchase
- ☐ Area Resident
- ☐ Other

Requested Action

Existing Zoning: R-1-L

Rezone to: AR-111

Fee:$ 400.00 ($50 remaining)

Receipt #: 859133 & 131

Check #: 110 & 112

Tax Parcel Number 15003 000136

Acreage 5.21 (GIS Calc Area)

Location Address 4375 Peckerwood Rd Gillsville GA 30543

I hereby certify that the above information and all attached information are true and correct.

Sign Tara Gregory Carlos Gregory Date: 4/20/23

Applicant must complete all information above. Failure to complete this section will result in the refusal of the application. The Planning Department has 15 days to review all applications and will set the dates for each application. If the application is found insufficient, an agenda date will not be set until the required information is submitted. Please note that the Planning Commission and County Commission dates are tentative.

Application Withdrawal: I hereby **withdraw** the application.

Sign _____ Date: _____

Staff Use Only

Application Date: 4/17/2023 Taken by: Katie M

Tentative Planning Commission Date: June 5, 2023 Tentative County Commission Date: July 13, 2023

County Commission District: 3

PLANNING AND DEVELOPMENT DEPARTMENT
2875 BROWNS BRIDGE ROAD, GAINESVILLE, GA 30504
MAILING ADDRESS: PO BOX 1435, GAINESVILLE, GA 30503
t. 770-531-6809 | f. 770-531-3902

HALL COUNTY
We have it all in Hall

CAMPAIGN CONTRIBUTIONS DISCLOSURE FORM

This form must be completed by the applicant and property owner, or person representing the property owner, for all zoning actions.

OCGA § 36-67A-3[C] Disclosure of campaign contributions:

(b) When any applicant for zoning action has made, within two years immediately preceding the filing of the applicant's application for the zoning action, campaign contributions aggregating $250.00 or more to a local government official who will consider the application, it shall be the duty of the applicant to file a disclosure report with the governing authority of the respective local government showing:

(3) The name and official position of the local government official to whom the campaign contribution was made; and

(4) The dollar amount and description of each campaign contribution made by the applicant to the local government official during the two years immediately preceding the filing of the application for the rezoning action and the date of each such contribution.

(b) The disclosures required by subsection (a) of this Code section shall be filed within ten days after the application for the zoning action is first filed. (Code 1981, Section OCGA § 36-67A-3[C], enacted by GA L. 1986, page 1269, Section 1, GA L. 1991, page 1365, Section 1).

I hereby certify that I have read the above and that:

I have**____ I have not X

within the two years immediately preceding this date, made any contribution(s) aggregating $250.00 or more to any local government official involved in the review or consideration of this application.

**If you have made such contributions, you must provide the data required below within ten (10) days of filing this application.

Name of Official(s): _____ Office: _____

Dollar Amount: _____ Date of Contribution: _____

Applicant's/Owner's Signature: Tara Gregory **Date:** 4/13/23

Applicant's/Owner's Name (Printed): Tara Gregory

PLANNING AND DEVELOPMENT DEPARTMENT
2875 BROWNS BRIDGE ROAD GAINESVILLE GA 30504
MAILING ADDRESS PO BOX 1435 GAINESVILLE GA 30503
t: 770-531-6809 | f: 770-531-3902

HALL COUNTY
We have it all in Hall

CAMPAIGN CONTRIBUTIONS DISCLOSURE FORM

This form must be completed by the applicant and property owner, or person representing the property owner, for all zoning actions.

OCGA § 36-67A-3[C] Disclosure of campaign contributions:

(b) When any applicant for zoning action has made, within two years immediately preceding the filing of the applicant's application for the zoning action, campaign contributions aggregating $250.00 or more to a local government official who will consider the application, it shall be the duty of the applicant to file a disclosure report with the governing authority of the respective local government showing:

(3) The name and official position of the local government official to whom the campaign contribution was made; and

(4) The dollar amount and description of each campaign contribution made by the applicant to the local government official during the two years immediately preceding the filing of the application for the rezoning action and the date of each such contribution.

(b) The disclosures required by subsection (a) of this Code section shall be filed within ten days after the application for the zoning action is first filed. (Code 1981, Section OCGA § 36-67A-3[C], enacted by GA L. 1986, page 1269, Section 1, GA L. 1991, page 1365, Section 1).

I hereby certify that I have read the above and that:

I have**____ I have not X

within the two years immediately preceding this date, made any contribution(s) aggregating $250.00 or more to any local government official involved in the review or consideration of this application.

**If you have made such contributions, you must provide the data required below within ten (10) days of filing this application.

Name of Official(s): _____ Office: _____

Dollar Amount: _____ Date of Contribution: _____

Applicant's/Owner's Signature: Carlos Gregory **Date:** 4/13/23

Applicant's/Owner's Name (Printed): Carlos Gregory

Tara and Carlos Gregory

4375 Peckerwood Rd Gillsville GA 30543

Narrative

We would like submit a request to rezone our property located at 4375 Peckerwood Rd Gillsville GA 30543 from R-1-L to AR-111. Along with the application to rezone our property, we are submitting an application for a conditional use permit.

We would like to convert a portion of an existing detached garage located on the property to a "base of operation" for our mobile food service unit to operate. Specifically, the "base of operation" will be used to clean and store our food concession trailer. Our base of operation will include a commercial grade kitchen, with a three-compartment sink, hand washing sink, mop sink, and waste water dumping location. Additionally, the space will include a refrigerator/freezer, prep table, and dry storage racks.

The application for conditional use is for Jack's Chicken Catering LLC, which is a mobile foodservice and catering business. Jack's Chicken will operate off site only at fairs, parks, catering sites, car dealerships, and designated food truck spaces on approved city streets. All cooking of food will be done on the food concession trailer at each venue spot, and no cooking shall be done on the residential premise. Jack's Chicken operates primarily off site on Saturdays and Sundays during daylight hours.

Cleaning and storage of the food concession trailer will occur after Saturday and Sunday events and during day light hours. There shall be no excess noise, fumes, or other hazards that would endanger the health, safety, or welfare of the neighborhood. Most cleaning can be completed on the food concession trailer. The only need for the "base of operation" is to dump gray water and to clean the chicken grates. The commercial kitchen would be housed inside an existing detached garage on the premise. All modifications would be done only on the inside of the existing garage, and no modifications would be necessarily on the outside of the existing structure. The conditional use request for a "base of operation" will only be for the use of a commercial kitchen in an existing building on the residential property, and for the parking of the concession food trailer on the property.

The following conditions cannot be met, and we are requesting a variance:

Condition 4

Per the health department code for operating a foodservice business, a commercial kitchen or "base of operation" for a food business must remain outside of the main residential dwelling. The commercial kitchen must be located in a separate building. For this reason, we are requesting that our conditional use permit be applied to an existing detached garage on the premise. We will build a separate dedicated room within the existing detached garage to meet the requirements of the health department. The room will not exceed 350 square feet of the existing 1800 square foot garage space available. There will be no modifications made to the building or land outside of the garage.

Conditions 13 and 16

Currently, we only have one neighbor that has visibility to our property that lives on the far-left side of the property. The proposed parking of the food concession trailer would be on the complete opposite side of the property and out of view. Our property has a vast number of trees which provide privacy from our neighbors and the street. The proposed parking space of the food trailer would be only visible to a car passing by on the road. Our road only has local through traffic of maybe 10 cars per day. Most of the surrounding properties are occupied by farm animals. The entire backside of the property wrapping around to the right side will be a 140+ acre horse farm. The entire street frontage of our property is a farm with chickens, pigs, and goats. Neither of the properties have a residence within viewing distance of where the proposed parking spot for the food trailer will be. Likewise, one neighbor on the left side would not have visibility either. Our residence, the detached garage and many trees would all block the view. The food concession trailer would be parked alongside the far-right side of the detached garage in an existing parking space. No grading or moving of soil will be necessary. There are no modifications that are necessary. There is an existing separate driveway entrance to the detached garage from the public road. No modifications will be necessary. Only one side of the food concession trailer and the front of the trailer will be visible to cars passing by. The detached garage and proposed parking space are well off the public road and set back in a highly forested area. Anyone driving by would have to intentionally slow down and look up the driveway to potentially have visibility of the food concession trailer.

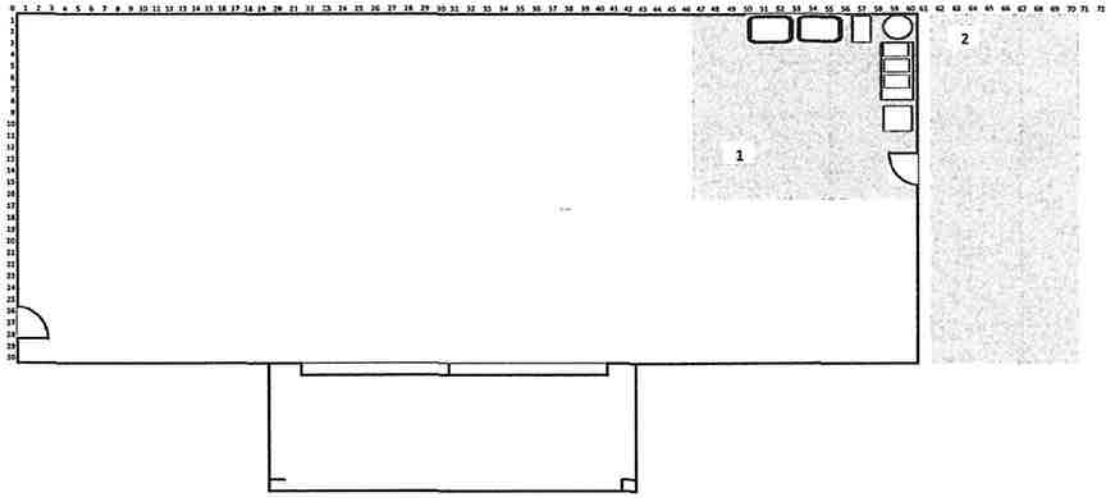

Carlos and Tara Gregory 4375
Peckerwood Rd
Gillsville Ga 30453

1. Proposed location of Dedicated Prep Kitchen
2. Proposed parking location of Food

1	N 03°31'33"W	76.28'
2	N 08°26'57"W	70.86'
3	N 11°38'38"W	132.91'
4	N 09°48'35"W	149.84'
5	N 03°03'04"W	70.84'
6	N 11°24'28"E	67.87'
7	N 19°30'02"E	107.16'
8	N 21°23'47"E	83.98'

FIELD SURVEY ERROR OF CLOSURE 1:26339
ANGULAR ERROR PER ANGLE POINT 00-00-03
INSTRUMENT USED NIKON TOPGUN
ADJUSTED BY CRANDALLS RULE
PLAT ERROR OF CLOSURE 1:262213

TIE: N.29°03'11"W. 1717.68 FEET TO C/L INTERSECTION OF PECKERWOOD ROAD AND STATE ROUTE 323.

100 0 100 200 300
GRAPHIC SCALE - FEET

JAMES M.& CELESTE J. CASEY

1/2"IPS

S 81°39'19"E 512.44'

3/4"CTF

1/2"IPS

(714.60')

C/L PECKERWOOD ROAD
(60 FOOT RIGHT OF WAY)
(GRAVEL)

R/W R/W

Map 1-28-97

Georgia, Hall County, Clerk Superior Court
Filed in office this 23 day of February
19 97 at recorded in slide 167F
Page 413
Dwight S. Wood
DWIGHT S. WOOD, CLERK

S 34°01'03"W 801.72'

ABM FARM, N/F

NOTES:

1) PROPERTY SHOWN HEREON IS SUBJECT TO EASEMENTS, RESTRICTIONS, RESERVATIONS, AND RIGHTS OF WAY OF RECORD, IF ANY.

2) BEARINGS SHOWN HEREON ARE BASED ON THE SOUTHERLY AND EASTERLY LINE, WHICH BEARS S.34°01'03"W., OF THE REFERENCED PLAT FOR MICHAEL L. WEAVER, SR.

RECORDING PERMIT
By Deborah R. Jones 2-23-97
HALL COUNTY PLANNING COMMISSION

3/4"CTF

1/2"IPS

S 88°35'48"W 67.12'

R/W R/W
30' 30'

M.L.WEAVER, N/F

REFERENCES:

1) PLATS BY FARLEY-COLLINS ASSOC. GRLS FOR:
A:MICHAEL L. WEAVER, SR., 385.170 ACRES.
1-28-1997, LAST REVISED 7-03-97.
B:CELESTE J. & JAMES M. CASEY, 6.290 ACRES,
2-12-1998.

LEGEND:
A = ARC
R = RADIUS
CONC = CONCRETE
DF = DRAINAGE FLOW
DS = DRAINAGE SWALE
AKA = ALSO KNOWN AS
C/L = CENTERLINE
DE = DRAINAGE EASEMENT
IPF = IRON PIN FOUND
IPS = IRON PIN SET
L.L.L. = LAND LOT LINE
N/F = NOW OR FORMERLY
R/W = RIGHT-OF-WAY
SS = SANITARY SEWER
B/S = SETBACK
FENCE
GAS
POWER
TELEPHONE
WATER
CTF = CRIMPTOP PIPE FOUND
CMF = CONCRETE MONUMENT FOUND
100 = CONTOUR ELEVATION
100.00 = ELEVATION AT "X"
PB = POWER BOX

"I HAVE CONSULTED THE F.I.R.M. FLOOD INSURANCE RATE MAP COMMUNITY PANEL NO. 130466 100 B. DATED 11-02-1983 AND IN MY OPINION THIS PROPERTY DOES NOT APPEAR TO LIE IN A SPECIAL FLOOD HAZARD AREA."
W. H. Collins

GEORGIA REGISTERED NO. 1435 LAND SURVEYOR WILLIAM H. COLLINS
GEORGIA REGISTERED NO. 2632 LAND SURVEYOR WILLIAM E. WHIDDEN

5.500+- ACRES

PREPARED BY:
FARLEY-COLLINS ASSOCIATES
P.O. BOX 731 532-1001
1201 THOMPSON BRIDGE ROAD
GAINESVILLE, GA. 30503

DATE: 2-12-1998
JOB #: 8515
SCALE: 1" = 100'

SURVEY FOR: ROBERT MYERS - NANCY MYERS
8050.CRD/8050-LDRW

LOCATION:
GILLSVILLE (GM 1557) DISTRICT
HALL COUNTY, GEORGIA

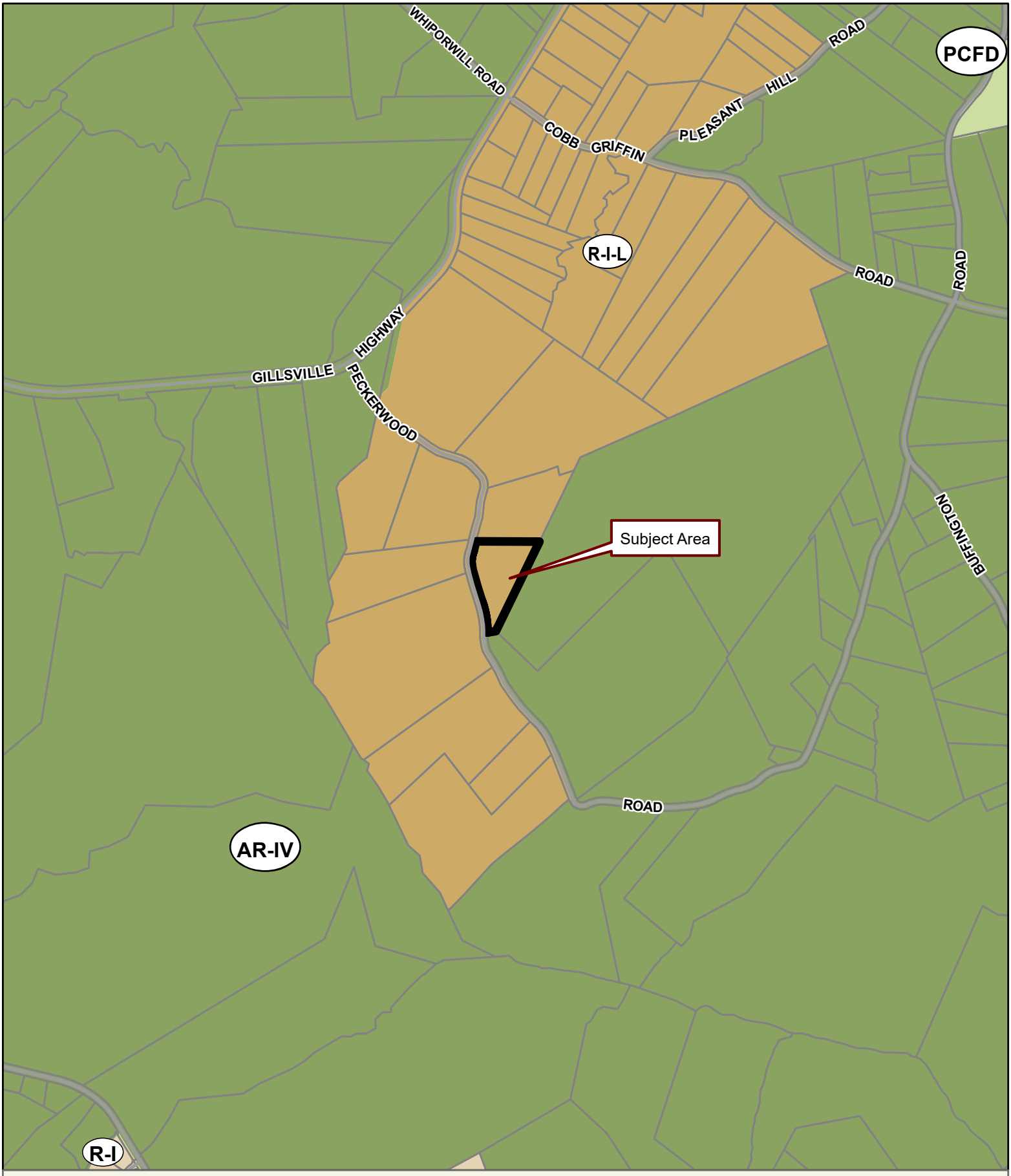

Applicant: CARLOS & TARA GREGORY
Tax Parcel #: 15003 000136
Location: 4375 PECKERWOOD ROAD, GILLSVILLE, GA 30543
Commission District 3 **PC Mtg. Date:** 06/05/2023

0 300 600 1,200
Feet

Zoning Boundary
City Limits
Subject Area
Structure

N

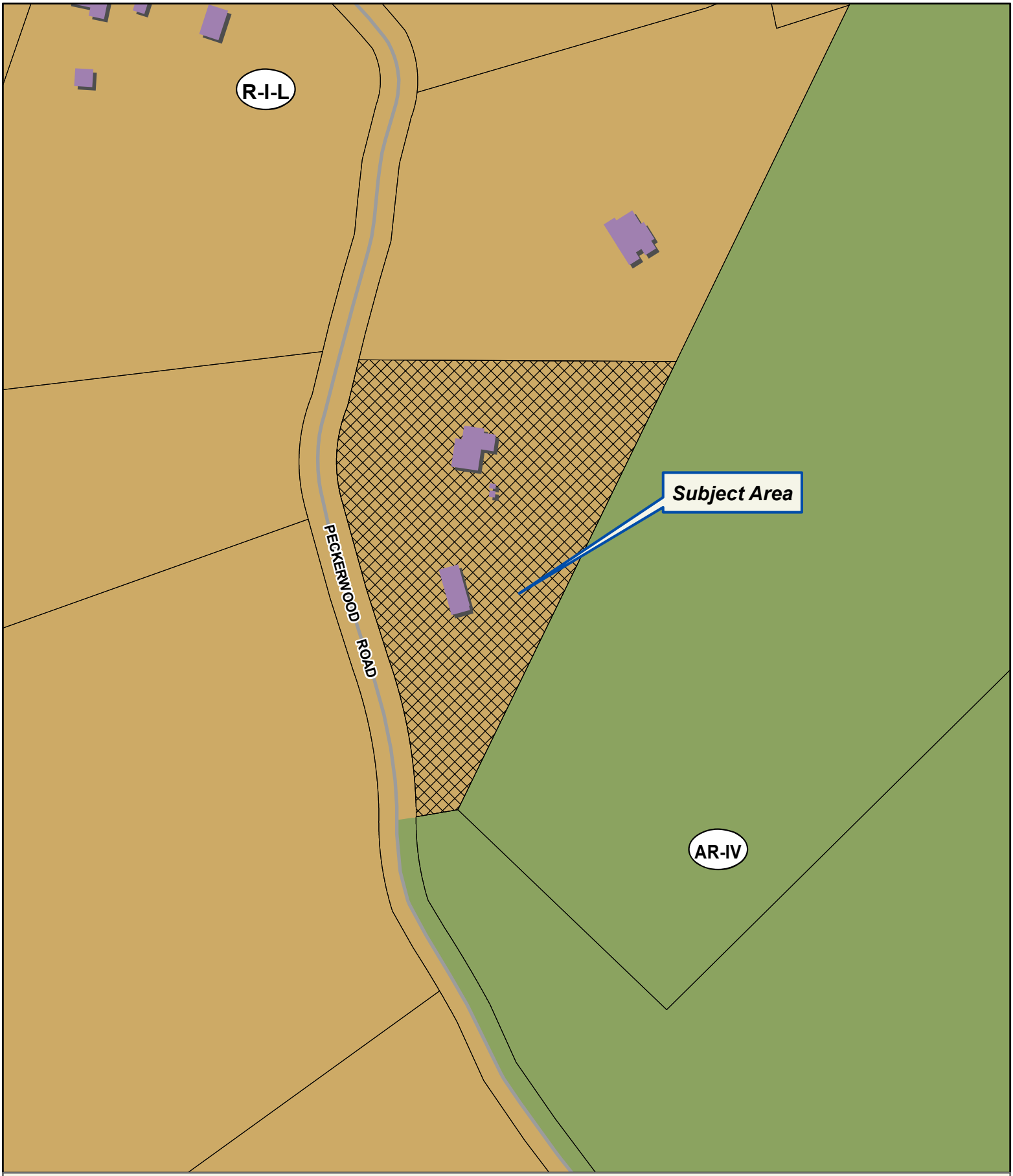

Applicant: CARLOS & TARA GREGORY
Tax Parcel #: 15003 000136
Location: 4375 PECKERWOOD ROAD, GILLSVILLE, GA 30543
Commission District 3 **PC Mtg. Date:** 06/05/2023

0 50 100 200
Feet

Zoning Boundary
City Limits
Subject Area
Structure

N

Applicant: CARLOS & TARA GREGORY
Tax Parcel #: 15003 000136
Location: 4375 PECKERWOOD ROAD, GILLSVILLE, GA 30543
Commission District 3 **PC Mtg. Date:** 06/05/2023

0 75 150 300
Feet

Zoning Boundary
City Limits
Subject Area

N

FILED & RECORDED 09/24/2021 12:04 PM
DEED BOOK 8941 PAGES 271 - 272
FILING FEES: $25.00
PT61: 069-2021-009482 TRANSFER TAX: $465.00
RECORDED BY: JP
CLERK: Charles Baker, C.S.C Hall County, GA

Record and Return to:
Lueder, Larkin & Hunter, LLC
32 S. Public Square
Jefferson, GA 30549
File No.: GA-JF-21-0786-PUR

LIMITED WARRANTY DEED

STATE OF GEORGIA
COUNTY OF HALL
APN/Parcel ID: 15003 000136

THIS INDENTURE, made this 20th day of September, 2021, between

Katherine Y. Morris

as party or parties of the first part, hereinafter called Grantor, and

Carlos D. Gregory and Tara L. Gregory
As Joint Tenants with Rights of Survivorship and Not as Tenants in Common

as party or parties of the second part, hereinafter called Grantee (the words "Grantor" and "Grantee" to include their respective heirs, successors and assigns where the context requires or permits).

W I T N E S S E T H: That Grantor, for and in consideration of the sum of TEN AND 00/100'S ($10.00) Dollars and other good and valuable consideration in hand paid at and before the sealing and delivery of these presents, the receipt whereof is hereby acknowledged, has granted, bargained, sold, aliened, conveyed and confirmed, and by these presents does grant, bargain, sell, alien, convey and confirm unto the said Grantee, the following described property, to wit:

All that tract or parcel of land lying and being in the Gillsville (GMD 1557) District, Hall County, Georgia, consisting of 5.60 acres, more or less, and being more particularly described according to a plat of survey prepared for Robert Myers and Nancy Myers by Farley-Collins Associates, registered surveyors, dated February 12, 1995, recorded on Plat Slide 671, Page 41-B, Hall County, Georgia Plat Records, reference to said plat and the record thereof is hereby made for a more complete description of said property.

Subject to all easements and restrictions of record.

TO HAVE AND TO HOLD the said tract or parcel of land, with all and singular the rights, members and appurtenances thereof, the same being, belonging, or in anywise appertaining, to the only proper use, benefit and behoof of the said Grantee, forever in FEE SIMPLE.

AND THE SAID GRANTOR will warrant and forever defend the right and title to the above described property against the claims of all persons owning, holding, or claiming by, through and under the said Grantor.

IN WITNESS WHEREOF, Grantor has hereunto set Grantor's hand and seal this day and year first above written.

Signed, sealed and delivered
in the presence of:

Unofficial Witness

Notary Public
My Commission Expires:
[Notary Seal]

COURTNEY SUZANNE CASPER
NOTARY PUBLIC
JACKSON COUNTY, GEORGIA
My Commission Expires
11-15-2024

GRANTOR:

Katherine Y. Morris (SEAL)

Anael Dominguez (CDI: Planning)

From: Emily McGahee (Environmental Health)
Sent: Wednesday, May 17, 2023 12:41 PM
To: Anael Dominguez (CDI: Planning); Randi Doveton (CDI: Planning)
Cc: Kelly Hairston (Environmental Health); Chad Harper (Environmental Health)
Subject: HCPC Tentative Agenda 6.5.23

Please find Environmental Health comments below:

Item 1, 3621 Reece Circle, Whitlow: Must meet all Environmental Health residential septic system permitting requirements.

Items 2A/B, 3263 Tanners Mill Road, Dunagan: A detailed business plan must be submitted to Hall County Environmental Health for review. Additional items septic system modification/expansion may be required after review of business plan. Tourist Accommodation permit/plan review and/or Food Service permit/plan review may be required after review of business plan.

Items 3A/B/C, 4375 Peckerwood Road, Gregory: A detailed business plan must be submitted to Hall County Environmental Health for review. Additional items septic system modification/expansion may be required after review of business plan. Food Service permit/plan will be required.

Item 4, 4033 Hidden Hollow Drive: Must meet all Environmental Health residential septic system permitting requirements. A copy of recorded plat showing property in current configuration must be submitted at time of permit application.

Item 5, 5800 Lanier Islands Pkwy: Must meet all Environmental Health commercial septic system permitting requirements. A detailed business plan must be submitted to Hall County Environmental Health for review.

Item 6, Deaton Creek Pkwy, Public Works: No comment

Item 7, Code Amendment: No comment

Emily McGahee
Hall County Environmental Health
Hall County Government Center
2875 Browns Bridge Road
Mailing: PO Box 5901
Gainesville, GA 30504
(770) 531-3973
(770) 531-6767 (fax)

http://dph.georgia.gov/environmental-health (State Website)
http://www.phdistrict2.org/HallCounty.htm (District Website)
http://www.hallcounty.org/devserv/environmental.asp (County Website & Forms)

Anael Dominguez (CDI: Planning)

From: Peevy, Jonathan <jpeevy@dot.ga.gov>
Sent: Thursday, May 11, 2023 4:33 PM
To: Anael Dominguez (CDI: Planning)
Cc: Niebauer, Parker J
Subject: RE: Tentative Planning Agenda for June 5, 20223

CAUTION: This email originated from outside of the organization. Do not click links or open attachments unless you recognize the sender and know the content is safe.

Anael,
The following will require GDOT coordination.

- 3263 Tanners Mill Road
- 5800 Lanier Islands Parkway

Thank you,

Jonathan Peevy, P.E.
Assistant District Traffic Engineer

Georgia Department of Transportation

District 1 Traffic Operations
1475 Jesse Jewell Pkwy
Suite 100
Gainesville, GA, 30501
770.533.8276 office

From: Anael Dominguez (CDI: Planning) <adominguez@hallcounty.org>
Sent: Thursday, May 11, 2023 2:27 PM
Subject: Tentative Planning Agenda for June 5, 20223

Good afternoon –

Here is the Tentative Agenda and Maps for the **Monday, June 5, 2023** Hall County Planning Commission Meeting.

Please use the links to review the documents and respond with comments to Hall County Planning and Development. Failure to provide comments in a timely manner may result in the information not being included in the staff report.

When submitting comments, please include the name of the applicant along with the address of the property with the corresponding comment.

Comments are due by **Thursday, May 18th.** Email comments to Randi (rdoveton@hallcounty.org) and Ana (adominguez@hallcounty.org).

CALL TO ORDER

AGENDA REVIEW

APPROVAL OF MINUTES – May 15, 2023

NEW BUSINESS

1. **3621 Reece Circle** | appeal an administrative decision for a hardship manufactured home, as it relates to §17.350.110 on a 1.01± acre tract located on the south side of Reece Circle at its intersection with A L Mangum Road | Zoned R-II; Tax Parcel 15014 000056A | **Proposed use: hardship mobile home** | * Commission District 3 | **Henry Whitlow, applicant.**

2. (A) **3263 Tanners Mill Road | Use Subject to County Commission Approval |** on a 37.28± acre tract located on the east side of Tanners Mill Road approximately 756 feet from its intersection with Weaver Road | Zoned AR-IV; Tax 15025 000002 **| Proposed use: agri-entertainment venue |** **Commission District 1 | **Paden M. Dunagan, applicant.**

   (B) **3263 Tanners Mill Road | Variance |** to allow for outside amplification of voice, music and/or instruments except during a wedding ceremony on a 37.28± acre tract located on the east side of Tanners Mill Road approximately 756 feet from its intersection with Weaver Road | Zoned AR-IV; Tax 15025 000002 **| Proposed use: agri-entertainment venue |** **Commission District 1 | **Paden M. Dunagan, applicant.**

3. (A) **4375 Peckerwood Road | Rezone |** from Residential-I-Low Density (R-I-L) to Agricultural Residential-III (AR-III) on a 5.21± acre tract located on the east side of Peckerwood Road approximately 1,720 feet from its intersection with Gillsville Highway | Zoned R-I-L; Tax Parcel 15003 000136 **| Proposed use: permitted uses in AR-III |** **Commission District 3 | **Carlos & Tara Gregory, applicants.**

   (B) **4375 Peckerwood Road | Use Subject to Planning Commission Approval |** on a 5.21± acre tract located on the east side of Peckerwood Road approximately 1,720 feet from its intersection with Gillsville Highway | Zoned R-I-L; Tax Parcel 15003 000136 **| Proposed use: residential business |** *Commission District 3 **| Carlos & Tara Gregory, applicants.**

   (C) **4375 Peckerwood Road | Variance |** from residential business conditions on a 5.21± acre tract located on the east side of Peckerwood Road approximately 1,720 feet from its intersection with Gillsville Highway | Zoned R-I-L; Tax Parcel 15003 000136 **| Proposed use: residential business |** *Commission District 3 **| Carlos & Tara Gregory, applicants.**

4. **4033 Hidden Hollow Drive | Rezone |** from Planned Residential Development (PRD) to Agricultural-Residential-III (AR-III) on a 4.36± acre tract located on the west side of Hidden Hollow Drive approximately 718 feet from its intersection with Hidden Hollow Terrace | Zoned PRD; Tax Parcel 10098 000125 **| Proposed use: permitted uses in AR-III |** ** Commission District 2 **| Bourdua REI, LLC/Brian Bourdua, applicant.**

5. **5800 Lanier Islands Parkway | Rezone |** from Planned Commercial Development (PCD) Conditional to Planned Commercial Development (PCD) to amend existing conditions on a 3.57± acre tract located on the south side of Lanier Islands Parkway at its intersection with Beards Road | Zoned PCD; Tax Parcel 07329 004012 **| Proposed use: vehicle sales and construction equipment rental & sales |** ** Commission District 2 **| Vacutek, LLC, applicant.**

6. **Deaton Creek Parkway | Change a Segment of a Road Name** | on the official Hall County road map from Deaton Creek Parkway to Deaton Way; being a ±0.096 mile section between Friendship Road and Thompsons Mill Road | ** Commission District 1 | **Hall County Public Works Staff, applicant.**

7. Public Hearing to Amend Title 17 of the Official Code of Hall County, Georgia, to comply with O.C.G.A. §§ 36-66-1 through 36-66-6, commonly known as the Zoning Procedures Law, as amended by the adoption of HB 1405; to repeal conflicting ordinances and resolutions; and for other purposes. ** | **Hall County Planning Staff, applicant.**
   - **Pending Documents**

*The Planning Commission's decision will be the final action taken unless appealed to the Board of Commissioners. To do so, file an application with the Planning Department within five working days of the Planning Commission's decision.

The Hall County Board of Commissioners will hear appeals at a public hearing Thursday, July 13, 2023 at 6:00 p.m. at the Hall County Government Center, 2nd Floor Meeting Room, 2875 Browns Bridge Road, Gainesville, Georgia.

**The Planning Commission's recommendation will be forwarded to the Board of Commissioners for final action at a public hearing on Thursday, July 13, 2023. The Board will meet at 6:00 p.m. at the Hall County Government Center, 2nd Floor Meeting Room, 2875 Browns Bridge Road, Gainesville, Georgia.

Thank you,
Ana Dominguez
Planning Commission Clerk
Hall County Community Development and Infrastructure

HALL COUNTY
GEORGIA

POST OFFICE DRAWER 1435
GAINESVILLE, GA 30503

t: 770.531.6800 | f: 770.531.3945

DIRECTOR
Srikanth Yamala

PUBLIC WORKS AND
UTILITIES DIRECTOR
Bill Nash, P.E.

Hall County Government

COMMUNITY DEVELOPMENT AND INFRASTRUCTURE
PUBLIC WORKS AND UTILITIES

M E M O R A N D U M

To: Randi Doveton, Director of Planning and Development

From: Bill Nash, Director of Public Works and Utilities

Date: May 18, 2023

Subject: June 5, 2023 - Hall County Planning Commission Agenda

Please be advised that our office has reviewed the Hall County Planning Commission agenda for the June 5, 2023 meeting. Upon review, we provide the following comments.

NEW BUSINESS

1. **3621 Reece Circle** | appeal an administrative decision for a hardship manufactured home, as it relates to §17.350.110 on a 1.01± acre tract located on the south side of Reece Circle at its intersection with A L Mangum Road | Zoned R-II; Tax Parcel 15014 000056A | **Proposed use: hardship mobile home** | * Commission District 3 | **Henry Whitlow, applicant.**

   a. **Engineering:** No Comment
   b. **Traffic:** No Comment
   c. **Utilities:** No Comment

2. (A) **3263 Tanners Mill Road | Use Subject to County Commission Approval |** on a 37.28± acre tract located on the east side of Tanners Mill Road approximately 756 feet from its intersection with Weaver Road | Zoned AR-IV; Tax 15025 000002 **| Proposed use: agri-entertainment venue |** **Commission District 1 | **Paden M. Dunagan, applicant.**

   a. **Engineering:** The site may require a stormwater management report should the site plan indicate the proposed development meets stormwater thresholds for impervious surfaces and/or disturbed acreage Show stream buffer and impervious setback from wrested vegetation not center line of stream
   Show stream buffer and impervious setback from wrested vegetation not center line of stream
   Proposed development is within 200' of state waters and will require a L.D.P.
   b. **Traffic:** No Comment
   c. **Utilities:** No Comment

3. (A) **4375 Peckerwood Road | Rezone |** from Residential-I-Low Density (R-I-L) to Agricultural Residential-III (AR-III) on a 5.21± acre tract located on the east side of Peckerwood Road approximately 1,720 feet from its intersection with Gillsville Highway | Zoned R-I-L; Tax Parcel 15003 000136 **| Proposed use: permitted uses in AR-III |** **Commission District 3 **| Carlos & Tara Gregory, applicants.**

a. **Engineering:** The site may require a stormwater management report should the site plan indicate the proposed development meets stormwater thresholds for impervious surfaces and/or disturbed acreage
b. **Traffic:** No comment
c. **Utilities:** Check with environment health if separate septic system will be required for food service.

4. **4033 Hidden Hollow Drive | Rezone |** from Planned Residential Development (PRD) to Agricultural-Residential-III (AR-III) on a 4.36± acre tract located on the west side of Hidden Hollow Drive approximately 718 feet from its intersection with Hidden Hollow Terrace | Zoned PRD; Tax Parcel 10098 000125 **| Proposed use: permitted uses in AR-III |** ** Commission District 2 | **Bourdua REI, LLC/Brian Bourdua, applicant.**

   a. **Engineering:** This property may have multiple streams and springheads as depilated on "plat for E.R.E. INC." any development on this property must show all stream buffers and flood zones.
   The site may require a stormwater management report should the site plan indicate the proposed development meets stormwater thresholds for impervious surfaces and/or disturbed acreage
   FEMA and Hall County studied Flood plains present on site.
   Show stream buffer and impervious setback from wrested vegetation not center line of stream
   b. **Traffic:** No Comment
   c. **Utilities:** Gainesville sewer district

5. **5800 Lanier Islands Parkway | Rezone |** from Planned Commercial Development (PCD) Conditional to Planned Commercial Development (PCD) to amend existing conditions on a 3.57± acre tract located on the south side of Lanier Islands Parkway at its intersection with Beards Road | Zoned PCD; Tax Parcel 07329 004012 **| Proposed use: vehicle sales and construction equipment rental & sales |** ** Commission District 2 **| Vacutek, LLC, applicant.**

   a. **Engineering:** The site may require a stormwater management report should the site plan indicate the proposed development meets stormwater thresholds for impervious surfaces and/or disturbed acreage Show stream buffer and impervious setback from wrested vegetation not center line of stream
   b. **Traffic:** GDOT permit required for access to Lanier Islands parkway.
   c. **Utilities:** City of Buford sewer district.

6. **Deaton Creek Parkway | Change a Segment of a Road Name |** on the official Hall County road map from Deaton Creek Parkway to Deaton Way; being a ±0.096 mile section between Friendship Road and Thompsons Mill Road | ** Commission District 1 | **Hall County Public Works Staff, applicant.**

   a. **Engineering:** No Comment
   b. **Traffic:** No Comment
   c. **Utilities:** No Comment.

Anael Dominguez (CDI: Planning)

From: John Hornick (Fire Services)
Sent: Tuesday, May 16, 2023 3:01 PM
To: Randi Doveton (CDI: Planning)
Cc: Anael Dominguez (CDI: Planning)
Subject: Fire Comments

Monday, June 5, 2023 Hall County Planning Commission Meeting.

1. (A) **4375 Peckerwood Road | Rezone |** from Residential-I-Low Density (R-I-L) to Agricultural Residential-III (AR-III) on a 5.21± acre tract located on the east side of Peckerwood Road approximately 1,720 feet from its intersection with Gillsville Highway | Zoned R-I-L; Tax Parcel 15003 000136 **| Proposed use: permitted uses in AR-III |** **Commission District 3 | Carlos & Tara Gregory, applicants.**

   (B) **4375 Peckerwood Road | Use Subject to Planning Commission Approval |** on a 5.21± acre tract located on the east side of Peckerwood Road approximately 1,720 feet from its intersection with Gillsville Highway | Zoned R-I-L; Tax Parcel 15003 000136 **| Proposed use: residential business |** *Commission District 3 **| Carlos & Tara Gregory, applicants.**

   (C) **4375 Peckerwood Road | Variance |** from residential business conditions on a 5.21± acre tract located on the east side of Peckerwood Road approximately 1,720 feet from its intersection with Gillsville Highway | Zoned R-I-L; Tax Parcel 15003 000136 **| Proposed use: residential business |** *Commission District 3 **| Carlos & Tara Gregory, applicants.**
   The Hall County Fire Marshal's Office has no comments as proposed

Regards,

John Hornick, NPQ Fire Service Plans Examiner 1
Lieutenant, Hall County Fire Rescue
Hall County Government
Main: 770-531-6838 | Cell: 404-597-0083
Website: www.Hallcounty.org

ZONING NOTICE

AN APPLICATION HAS BEEN FILED WITH HALL COUNTY IN REGARD TO THE ZONING REGULATIONS AS THEY APPLY TO THIS PROPERTY

APPLICANT: Carlos & Tara Gregory

REQUEST: Rezone from R-1-L to AR-111 for permitted uses in AR-111

PUBLIC HEARINGS WILL BE HELD ON:

PLANNING COMMISSION
Date: June 5, 2023
Time: 5:15 pm

&

COUNTY COMMISSION
Date: July 13, 2023
Time: 6:00 pm

HALL COUNTY GOVERNMENT CENTER, 2875 BROWNS BRIDGE ROAD, GAINESVILLE, GA

FOR MORE INFORMATION CALL: (770) 531-6809

ZONING NOTICE

AN APPLICATION HAS BEEN FILED WITH HALL COUNTY IN REGARD TO THE ZONING REGULATIONS AS THEY APPLY TO THIS PROPERTY

APPLICANT: CARLOS & TARA GREGORY

REQUEST: USE SUBJECT TO PLANNING COMMISSION APPROVAL FOR A RESIDENTIAL BUSINESS WITH VARIANCES.

PUBLIC HEARINGS WILL BE HELD ON:

PLANNING COMMISSION
Date: JUNE 5, 2023
Time: 5:15 P.M.

IF APPEALED

COUNTY COMMISSION
Date: July 13, 2023
Time: 6:00 P.M.

HALL COUNTY GOVERNMENT CENTER, 2875 BROWNS BRIDGE ROAD, GAINESVILLE, GA

FOR MORE INFORMATION CALL: (770) 531-6809

ZONING NOTICE

AN APPLICATION HAS BEEN FILED WITH HALL COUNTY IN REGARD TO THE ZONING REGULATIONS AS THEY APPLY TO THIS PROPERTY

APPLICANT: Carlos & Tara Gregory

REQUEST: Rezone from R-1-L to AR-111 for permitted uses in AR-111

PUBLIC HEARINGS WILL BE HELD ON:

PLANNING COMMISSION
Date: June 5, 2023
Time: 5:15 pm

&

COUNTY COMMISSION
Date: July 13, 2023
Time: 6:00 pm

HALL COUNTY GOVERNMENT CENTER, 2875 BROWNS BRIDGE ROAD, GAINESVILLE, GA

FOR MORE INFORMATION CALL: (770) 531-6809

ZONING NOTICE

AN APPLICATION HAS BEEN FILED WITH HALL COUNTY IN REGARD TO THE ZONING REGULATIONS AS THEY APPLY TO THIS PROPERTY

APPLICANT: CARLOS & TARA GREGORY

REQUEST: USE SUBJECT TO PLANNING COMMISSION APPROVAL FOR A RESIDENTIAL BUSINESS WITH VARIANCES.

PUBLIC HEARINGS WILL BE HELD ON:

PLANNING COMMISSION
Date: JUNE 5, 2023
Time: 5:15 P.M.

IF APPEALED

COUNTY COMMISSION
Date: July 13, 2023
Time: 6:00 P.M.

HALL COUNTY GOVERNMENT CENTER, 2875 BROWNS BRIDGE ROAD, GAINESVILLE, GA

FOR MORE INFORMATION CALL: (770) 531-6809