WATER-TITE
IPS CORPORATION

FR MultiBox™ Gas Outlet Box System

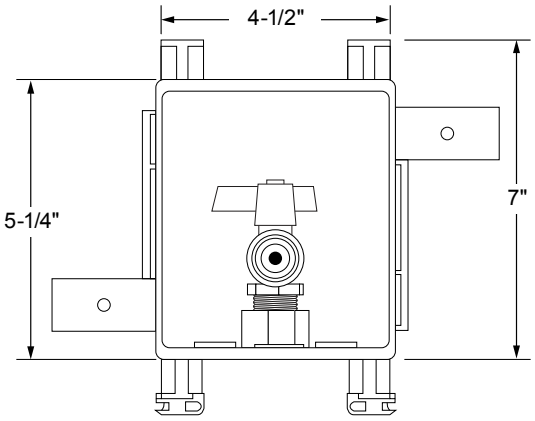

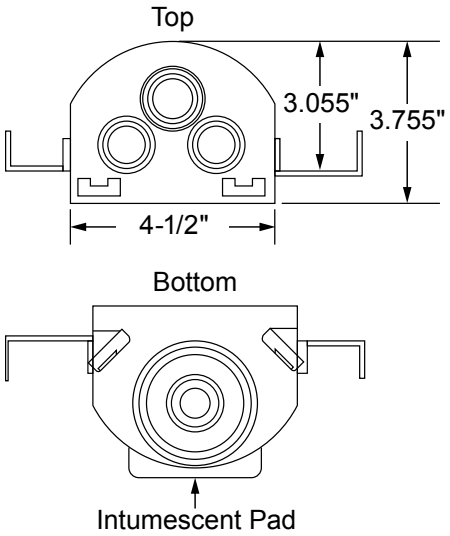

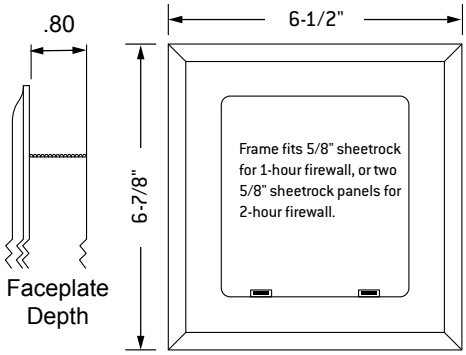

Specifications:
Furnish and install MultiBox Gas Outlet Box. Unit shall be Water-Tite product code checked below, as manufactured by IPS Corporation.

Box/Frame Material:
PVC

Valve:
- 1/4 Turn Valve, 1/2" Male NPT, 3/4" Male NPT, or 1/2" Female CSST
- Max working pressure: 1/2 PSIG
- Max testing pressure: 10 PSI

Available Accessories:
3 Universal Faceplates: Open, Solid and Louvered; Stabilizer Bar

Certifications:
- Valve complies with ANSI Z21/CSA9.1
- CSA listed to ANSI Z21/CSA9.1

Box:
Boxes have been certified with the following ratings: ASTM E814, 1 Hr (F), 41 Min (T) and 2 Hr (F), 101 Min (T) CAN/ULC-S115-1 Hr (F/FH), 41 Min (FT/FTH) and 2 Hr (F/FH) 101 Min (FT/FTH)

	PRODUCT	DESCRIPTION	MODEL	UNITS/CASE
	83347	FR Gas Outlet Box, 1/2" Gas Valve	FRMBG1212IP	10
	83348	FR Gas Outlet Box, 1/2" Gas Valve for CSST Pipe	FRMBG1212CSST	10
	83349	FR Gas Outlet Box, 3/4" Gas Valve	FRMBG1234IP	10

IPS CORPORATION
500 Distribution Parkway, Collierville, TN 38017 ▪ Phone: 800-888-8312 ▪ Fax: 901-853-5008 ▪ www.ipscorp.com